Workshop Manual

NAVIGATOR

Copyright by
MVAGUSTA MOTORCYCLES S.p.A.
Via G. Macchi , 144 (Schiranna)
21100 VARESE - ITALY

1st Edition
Printed in Italy
Print no. - 8A0095860

Downloaded from www.Manualslib.com manuals search engine

Introduction
This publication is intended for CAGIVA Workshops and is designed to help authorized personnel in service and repair operations. Familiarity with the specifications provided herein is a key factor in ensuring effective training of operators.
To make the manual easy to understand, the different paragraphs are identified by icons that point out the subjects being dealt with.
Notes having special meanings are marked with the following symbols:


Accident-prevention rules for the operator and other people working close by.


There is a possibility that the vehicle and/or its components may be damaged.


Further information on the operation being performed.

Tips

To avoid problems and obtain the best possible results, CAGIVA recommends observing the following general rules:
- *Before carrying out any repairs, evaluate the customer's report of the vehicle's malfunction and ask any questions that may help clarify the nature of the problem.*
- *Clearly identify the causes of the malfunction. This manual provides the fundamentals of troubleshooting, which the operator will complete with his personal experience and the participation in the periodic training courses organized by CAGIVA.*
- *Make a rational plan of the repair so as to avoid wasting time in collecting spares, preparing tools, etc.*
- *Only perform the operations that are required to reach the part to be repaired. Helpful guidelines are provided in the disassembling and removing procedures described in this manual.*

General repairing rules

1 Always replace gaskets, sealing rings and cotter pins with new ones.
2 When loosening or tightening nuts or screws, always begin with the largest, or with the one at the centre. Tighten with the prescribed torques using a crosswise pattern.
3 Always mark the parts and positions that might be exchanged when reassembling.
4 Use genuine CAGIVA spares, and lubricants of the recommended brands.
5 Use special tools as specified.
6 Consult the Technical Circulars, as they may contain updated information on adjusting and service procedures.

Downloaded from www.Manualslib.com manuals search engine

IDENTIFICATION DATA

The vehicle is identified by the following:
- Motorcycle serial number (1) on the right side of the head tube.
- Engine serial number (2) on the lower part of the right-hand crankcase half.
- Colour code on plate (3) inside the glove compartment under the saddle.
- Homologation data on the plate applied to the frame lower tube, next to the steering head tube.

When ordering spares, always mention the motorcycle and engine serial numbers and the colour code.

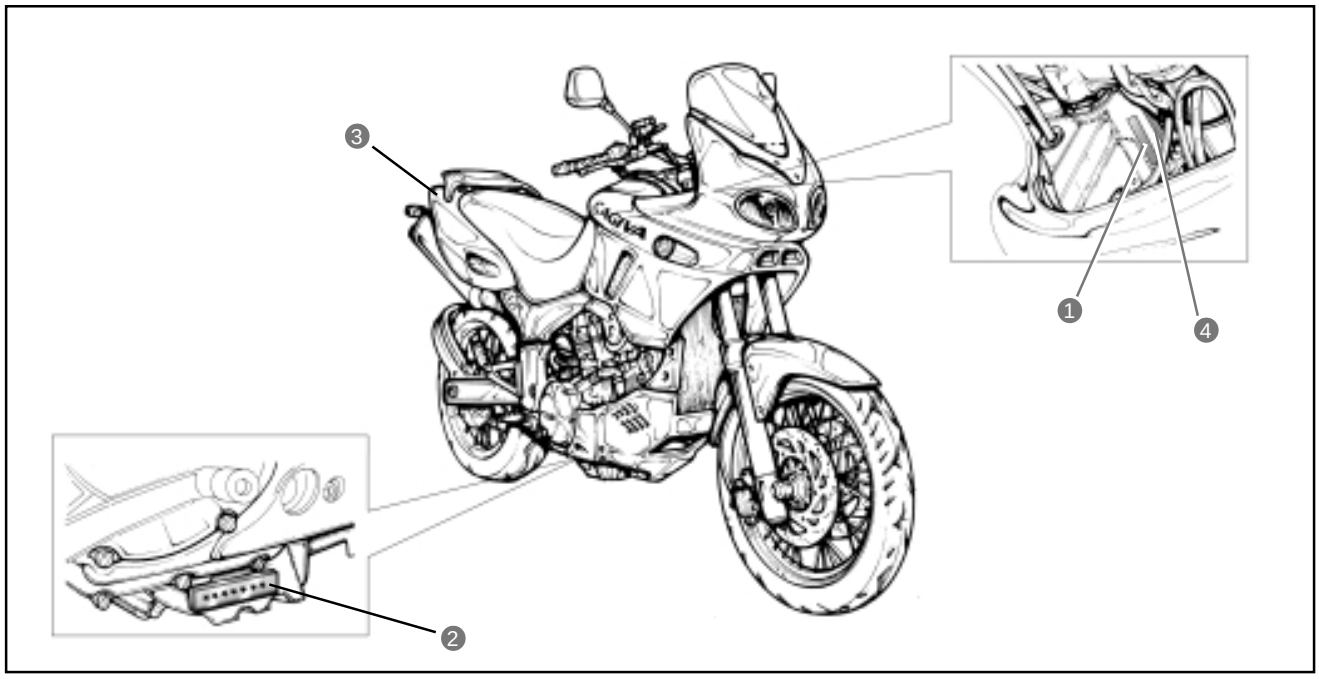

Downloaded from www.Manualslib.com manuals search engine

Contents

	Section	Page
General information	A	5
Maintenance	B	9
Injection - Air intake system	C	45
Engine	D	119
Suspensions and wheels	E	299
Brakes	F	324
Electrical equipment	G	338
Engine cooling	H	376
Specific tooling	I	390
Tightening torques	L	394
Index	M	400

Downloaded from www.Manualslib.com manuals search engine

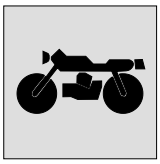

Section **A**

Downloaded from www.Manualslib.com manuals search engine

Dimensions and weight A-3
Engine unit A-3
Transmission unit A-3
Frame A-4
Front suspension A-4
Rear suspension A-4
Wheels and brakes A4
Electrical system A-4
Instrument panel A-4
Fuel/oil/coolant/fork oil capacity A-4

Downloaded from www.Manualslib.com manuals search engine

DIMENSIONS AND WEIGHTS

NAVIGATOR

Overall length ..... 2168 mm
Overall width ..... 790 mm
Overall height ..... 1290 mm
Wheelbase ..... 1530 mm
Ground clearance ..... 180 mm
Seat height ..... 850 mm
Dry weight ..... 222 kg

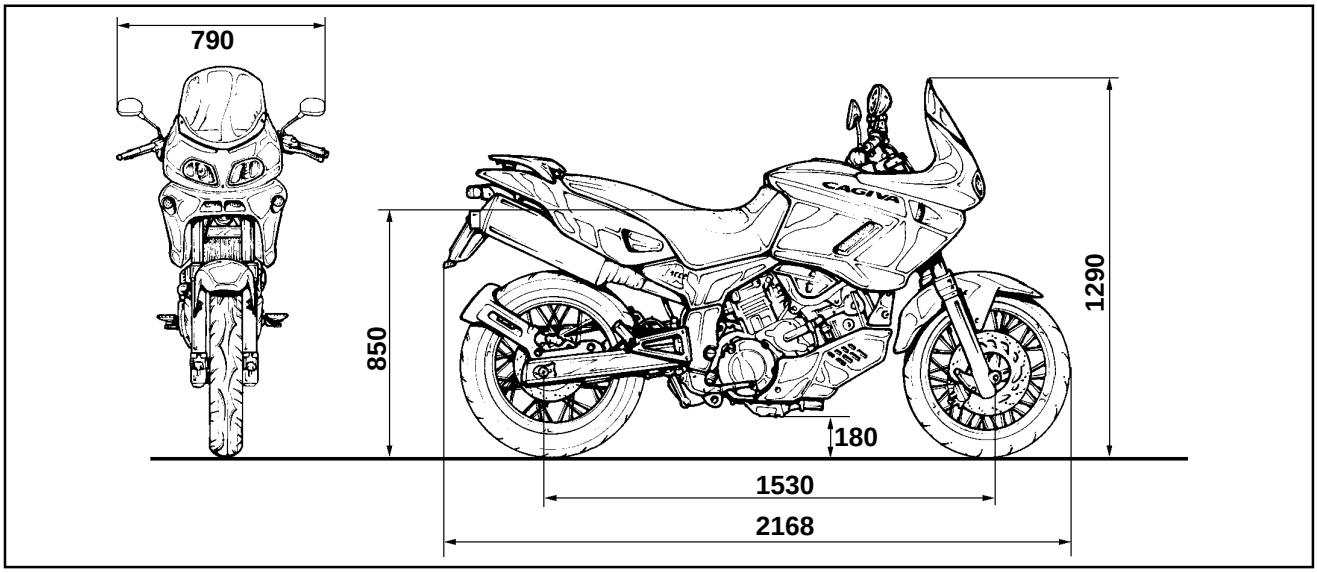

ENGINE UNIT

Type ..... Liquid cooled, DOHC, TSCC four stroke
Number of cylinders 2
Bore ..... 98,0 mm
Stroke ..... 66 mm
Displacement ..... 996 cm^3
Compression ratio ..... 11.3 : 1
Fuel feed system ..... Injection
Air filter ..... Non woven synthetic material
Starter system ..... Electric
Lubrication system ..... Wet sump

TRANSMISSION UNIT

Clutch ..... Wet multi-plate type
Gearbox ..... 6 speed constant mesh
Gear change ..... 1 down, 5 up
Primary reduction 1.838 (57/31)
Final reduction 2.562 (41/16)
Gear ratios, 1a 2.666 (32/12)
2a 1.933 (29/15)
3a 1.500 (27/18)
4a 1.227 (27/22)
5a 1.086 (25/23)
6a 1.000 (24/24)
Transmission chain ..... 5/8” x 5.16”

Downloaded from www.Manualslib.com manuals search engine

FRAME

Type ..... Rectangular and square box section tubular framework in highly resistant steel with box-type strengthening supports at the fork fulcrum attachment.

FRONT SUSPENSION

Type ..... Conventional advanced pivot hydraulic telescopic fork with 45 mm diameter tubes. Telescopic movement 150 mm.
Steering angle ..... 32° (left and right)
Steering head angle ..... 25°
Trail ..... 110 mm

REAR SUSPENSION

Type ..... Single hydraulic shock absorber progressively damped with external pre-load adjustment of the spring and extension of the hydraulic braking effect. Wheel travel 160 mm.

WHEELS AND BRAKES

Front brake ..... Twin disc
Rear brake ..... Single disc
Front tyre ..... Metzeler ME Z4 C – 110/80 – 18”
Rear tyre ..... Metzeler ME Z4 – 150/70 – 17”

ELECTRICAL SYSTEM

Transistorised electronic ignition
Ignition phase ..... 3° before T.D.C. at 1300 rpm
Spark plugs ..... NGK CR8EK or DENSO U24ETR
Battery 12v 10Ah
Generator ..... Three phase AC generator
Fuses 30/30/15/15/15/10/10A
Headlight unit ..... Main beam: condenser halogen bulb H1 12v-55w
Dipped beam: polyellipsoidal bulb H3 12v-55w
Sidelight 12v 5w
Direction indicators 12v 10w
Number plate light 12v 5w
Brake/tail light 12v 21/5w

INSTRUMENT PANEL

Instrument bulb 12V 1.2W
Warning lights 12V 2W

FUEL/OIL/COOLANT/FORK OIL CAPACITY

Fuel tank ..... 20 L
Engine oil: oil change ..... 3100 ml
oil change with filter ..... 3300 ml
overhaul ..... 3600 ml
Engine coolant ..... 2000 ml
Fork oil (each tube) ..... 680 ml

Downloaded from www.Manualslib.com manuals search engine

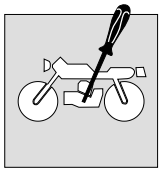

Section **B**

Downloaded from www.Manualslib.com manuals search engine

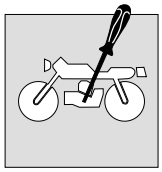

Maintenance and tuning B-4
Compression check B-23
Oil pressure check B-24
Technical data B-25

Downloaded from www.Manualslib.com manuals search engine

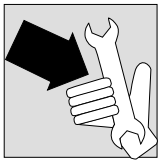

Check ■ Substitution ●		First 1000 km	Every 1000 km	Every 6000 km	Every 12000 km	Every 20000 km	Every 24000 km
Engine oil	Check level		■				
Engine oil	Substitute	●		●			
Engine oil filter	Substitute	●			●		
Coolant	Check level	■	■				
Coolant	Substitute			Every 2 years			
Valve tappet clearance adjustment	Check/adjust						■
Timing chain tension	Check/adjust	■					■
Synchronisation butterfly valves	Check/adjust				■		
Spark plugs	Check/substitute	■		■	●		
Fuel filter	Substitute				●		
Air filter	Check/substitute			■	●		
Fuel feed system	Check			■			
Brake fluid	Check level	■	■				
Brake fluid	Substitute			Every 2 years			
Brake disc pads	Check			■			
Brake discs	Check				■		
Braking system	Check			■			
Braking system	Bleed air		Every 20000 km/every 2 years				
Accelerator control	Check/adjust	■		■			
Clutch control	Check	■		■			
Steering	Check bearing play	■			■		
Fork	Substitute oil			Every 2 years		●	
Secondary transmission chain	Check tension/lubrication	■	■				
Crown and pinion, chain	Check/substitute				■		
Tyres	Check pressure/substitute	■	■				
Screws and bolts	Check for tightness	■		■			
Fuel tubing	Substitute			Every 4 years			
Clutch cover screws	Check for tightness	■					
Rear wheel bearings	Check				■		

Downloaded from www.Manualslib.com manuals search engine

MAINTENANCE AND TUNING

This section describes the servicing procedures for each part of periodical maintenance.

FUEL TANK REMOVAL

To complete this operation it is necessary to previously remove the seat.

- Remove the complete fuel tap assembly by unscrewing the three screws 1 indicated in the figure.
- Extract the flange 2 of the petrol covers.

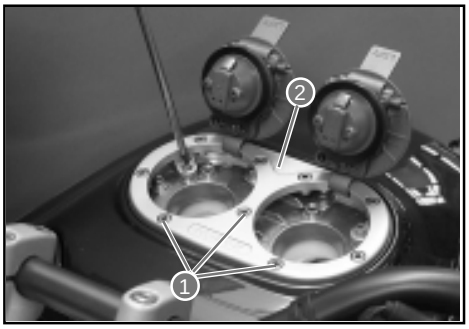

- Remove the six screws **3** using an 8mm spanner.
- Extract the plate **4** paying attention to the two washers underneath.

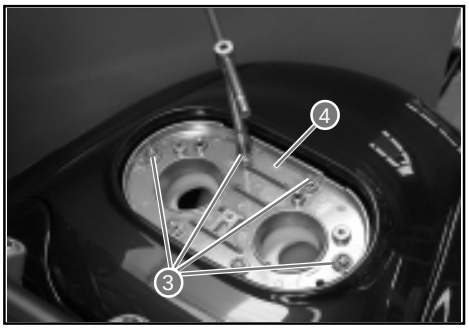

- Remove the tank cover **5** by unscrewing the two screws **6**.

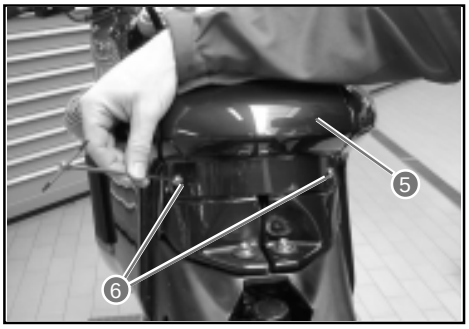

- Remove the windshield **7** by unscrewing the three screws **8** shown in the figure.

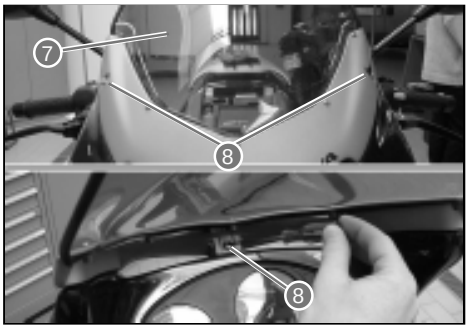

Downloaded from www.Manualslib.com manuals search engine

- Remove the fairing by unscrewing the five screws **1**. There is one front screw and four screws highlighted in the figure.

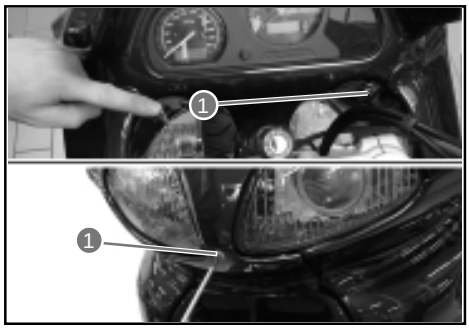

- Remove the front protection by unscrewing the two lower screws **2**, as shown in the figure.



- Disconnect the indicator connectors. One is indicated in the figure and the other is on the opposite side of the machine.



- Disconnect the fuel tubes from the left fuel tank. The fuel tubes are attached to the fuel tank by rapid attachments and their removal automatically blocks the exit of fuel. It is necessary to push the lever **3** and slide out the elbow union **4** to disassemble it. Before effecting reassembly, check that the small pin **4** is completely extended. If it is not in position, push on the lever **3** to bring it into position.

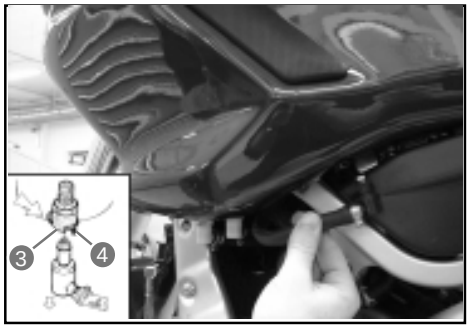

- Disconnect the reserve fuel sensor connector attached to the right fuel tank.



Downloaded from www.Manualslib.com manuals search engine

- Slacken and remove the two tank union clamps **1**. One is situated at the front of the vehicle and the other at the back of the tank.



- Finally, remove the two fixing screws **2**. Disconnect the overflow tube from the left fuel tank.



AIR FILTER

Check every 6000 km (or 6 months)
Substitute every 12000 km (or 12 months).



- It is necessary to remove the fuel tanks before removing the air filter.

- Carefully eliminate dust and dirt from the filter element by using compressed air.

The compressed air must be blown from the exterior of the filter element. If compressed air is used internally, the dust and dirt will be pushed into the pores of the filter thereby reducing the flow of air to the same element.

- To assemble a clean or new filter element, carry out the operation of disassembly in the reverse order.

Should the motorcycle be used frequently on dusty roads, the filter element must be cleaned more frequently. The use of the engine without a filter or with a broken filter element will certainly shorten the life of the engine. Check that the air filter is always in good condition. The long life of the engine depends a lot on this component!

Downloaded from www.Manualslib.com manuals search engine

SPARK PLUGS

Check every 6000 km (or 6 months)
Substitute every 12000 km (or 12 months)

After the first 1000 km it is necessary to remove the spark plugs, clean them and check the distance between the electrodes (0.6÷0.7 mm).

REMOVAL OF SPARK PLUG N° 1 (FRONT)

- Remove the sump guard by unscrewing the two screws **1**. One screw is indicated in the figure whilst the other screw is on the other side.

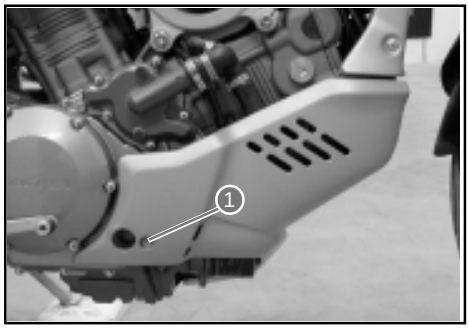

- Disconnect the fuel tubes.
- Remove the left side protection of the radiator.



- Remove the lower radiator fixing and its spacer. Unhook the radiator from its mountings.
- Push the radiator down so that there is access to the forward spark plug.

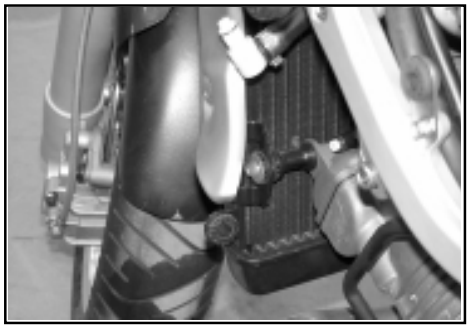

- Remove the spark plug insulated cap.
- Unscrew the spark plug as shown in the figure.

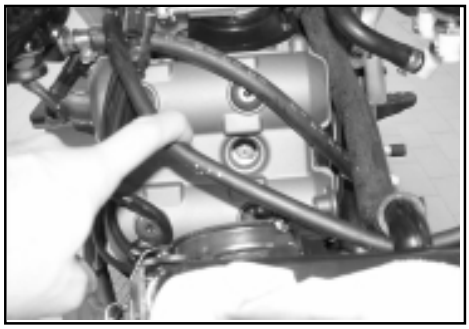

During this operation, pay attention to the front mudguard. Place a piece of cloth between the radiator and the mudguard as shown in the figure.

Downloaded from www.Manualslib.com manuals search engine

Be careful to not damage the finning of the radiator.

The radiator and engine can provocate serious burns when they are hot. Wait until the radiator and the engine are cool enough to be touched before carrying out this operation.

REMOVAL OF SPARK PLUG N° 2 (REAR)

- Remove the seat.
- Remove the seat compartment by unscrewing the eight screws **1**. Six of theses screws are shown in the figure.

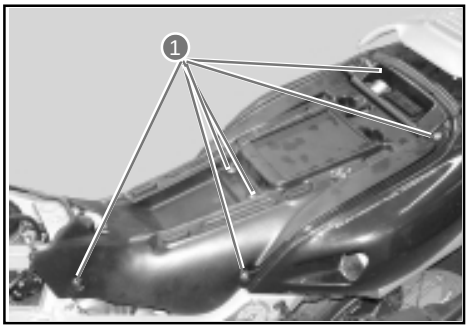

- Unhook the rubber mountings of the fuel filter.
- Remove the spark plug insulated cap.
- Remove the spark plug.

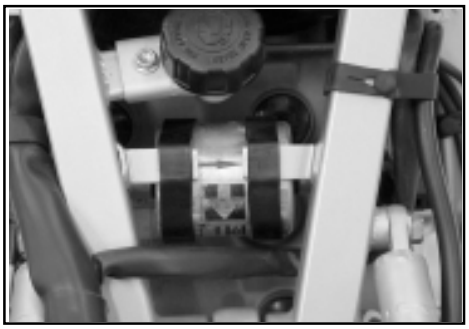





Downloaded from www.Manualslib.com manuals search engine

HEAT GRADE CODE

- Check the heat grade code of the spark plug.

NGK	CR8EK
DENSO	U24ETR

The type "R" spark plug has a resistor on the central electrode to avoid radio disturbance.

CARBON DEPOSITS

- Check the spark plugs for carbon deposits. If there are deposits, use the appropriate machine or a pointed tool to eliminate them. Take care in using the pointed tool.

THE GAP BETWEEN THE SPARK PLUG ELECTRODES

- Measure the gap between the spark plug electrodes using feeler blades. Adjust the gap if it is not correct, using the following information:

Specific tool: **800096651: Feeler gauge**
800096872: Feeler gauge

Standard
Normal gap between the electrodes of the spark plug A: 0,6÷0,7 mm

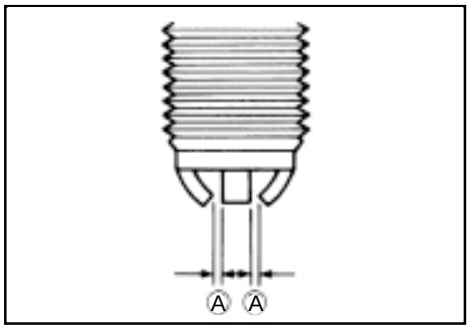

THE CONDITION OF THE ELECTRODES

- Controllare se gli elettrodi sono usurati o bruciati. Se essi fossero estremamente usurati o bruciati,sostituire la candela.
  Sostituire la candela anche in caso di rottura dell'isolante o danneggiamento della filettatura.

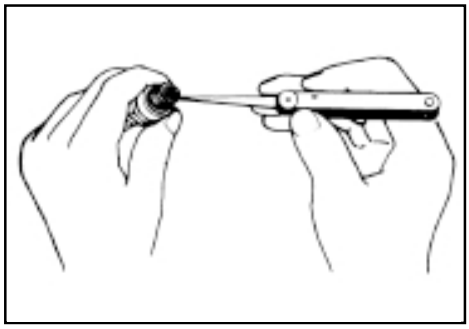

When a spark plug substitution is made, check the pitch size and the length of the thread. If the threading is too short, carbon residues will be deposited on the threading of the cylinder head thereby possibly causing damage to the engine.

REPLACING THE SPARK PLUG AND INSULATED CAP

Carefully screw the spark plug into place by hand before tightening with a plug spanner. This is to avoid damage to the aluminium threading.

- Manually screw in the spark plugs into the cylinder heads and tighten them to the specific torque.

Torque pressure
Spark plug: 11 N·m (1,1 kg-m)

Downloaded from www.Manualslib.com manuals search engine

*When the front and rear spark plug insulated caps are pushed on, turn the triangular signs on the insulated caps **A** towards the exhaust side of the cylinders.*

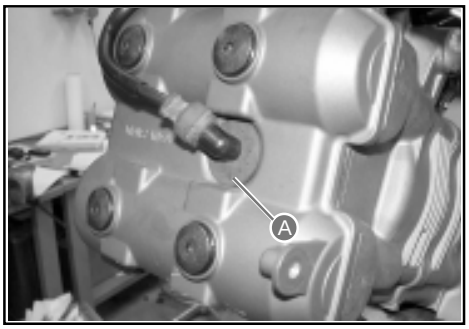

VALVE TAPPET CLEARANCE ADJUSTMENT

Check every 24000 km (or every two years)

- Remove the seat.

FRONT CYLINDER

- Remove the spark plug as described in page B-7.
- Remove the front cylinder head valve cover **1** by unscrewing the four screws **2** shown in the figure.

When removing the valve cover, be careful that the locating pins or the gasket do not fall to the ground or inside the cover opening.

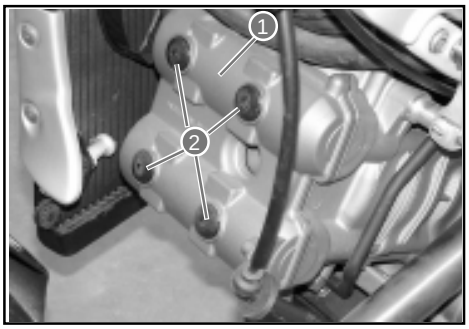

The valve tappet clearances vary between the inlet and the exhaust valves.
The valve tappet clearance adjustment must be checked and adjusted:
1) During periodical maintenance.
2) When tappet maintenance is carried out.
3) When the camshafts are removed for maintenance.

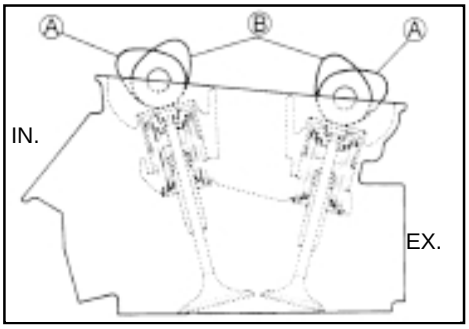

Valve tappet clearances (cold):
Inlet : 0.10 - 0.20 mm
Exhaust : 0.20 - 0.30 mm

** Valve tappet clearances must be checked when the piston is in the top dead centre (T.D.C.) position of the compression cycle.*
** The inlet and exhaust cams of the front cylinder in position A indicate that the front piston is in the top dead centre (T.D.C.) position of the compression cycle.*
** The inlet and exhaust cams of the rear cylinder in position B indicate that the rear piston is in the top dead centre (T.D.C.) position of the compression cycle.*
** Specified valve tappet clearances are with a COLD engine.*
** Use a 17 mm spanner to turn the camshaft when checking the valve tappet clearances. The camshaft must be turned in the direction of normal engine operation. Both spark plugs must be removed.*

Downloaded from www.Manualslib.com manuals search engine

- Remove the plug of the generator cover **1** and the timing cover inspection plug **2**.

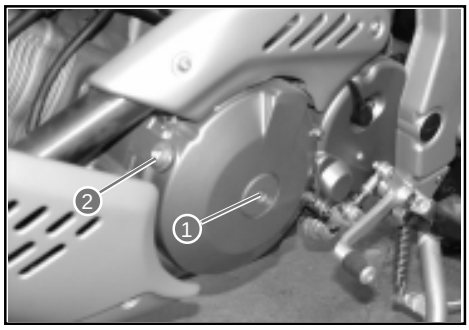

- Turn the engine camshaft to bring the piston of the N° 1 cylinder (front) to the top dead centre (T.D.C.) position of the compression cycle. Align the “F/T” line on the generator rotor with the timing inspection hole line and bring the camshafts to the indicated position in page B- 10.)

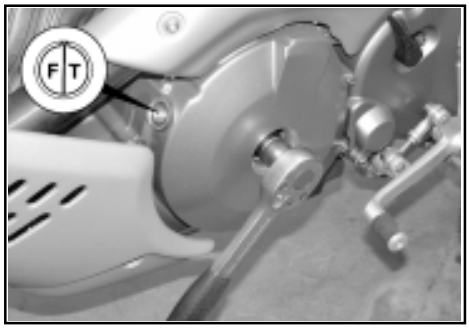

- To check the valve tappet clearances of the N° 1 cylinder (front), insert a feeler gauge between the valve stem and the cam. If the clearance is not correct, adjust it within the specified range.

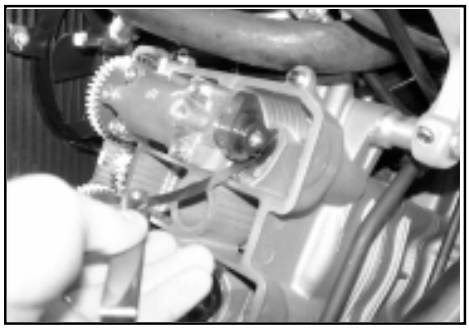

REAR CYLINDER

- Remove the seat, the seat compartment and the spark plug as described in page B-8.
- Remove the left and right hand side panels by unscrewing the two screws.



- Disconnect the oil vapour tube from the left hand side of the machine.

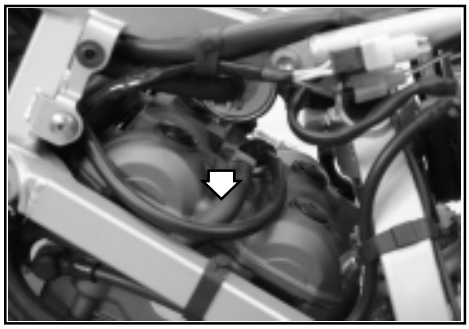

Downloaded from www.Manualslib.com manuals search engine

- Unhook the rear brake fluid chamber by unscrewing the screw shown in the figure.
- Disconnect the electrical connector of the camshaft position sensor.
- Remove the sensor by unscrewing the two relative screws.

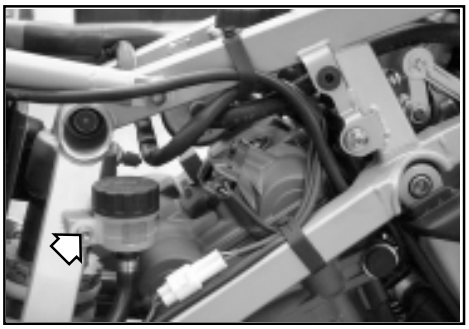

- Disassemble the fuel filter from its supports and disconnect it from the fuel tubes, taking care to not spill any fuel.

Place a cloth underneath the fuel filter.

- Disassemble the expansion tank cover assembly.

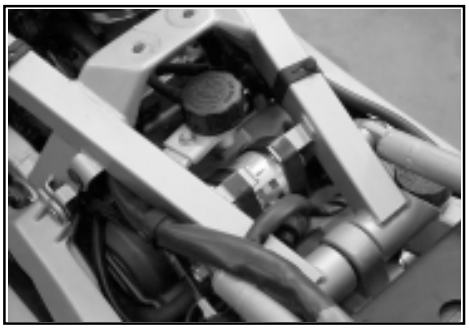

- Remove the rear cylinder head valve cover by unscrewing the four relative screws shown in the figure.

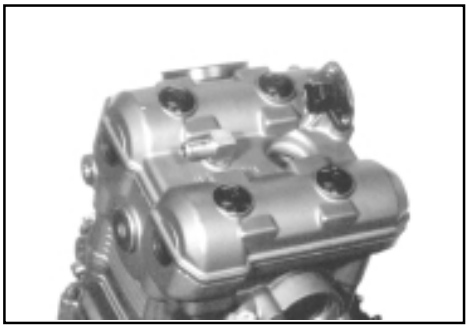

- Rotate the crankshaft 270° (3/4 of a turn) to bring the piston of N° 2 cylinder (rear) to T.D.C. of the compression cycle. Align the “R/T” line on the rotor of the generator with the counter-line of the timing synchronisation inspection hole and bring the camshafts in the position indicated at page B-7.

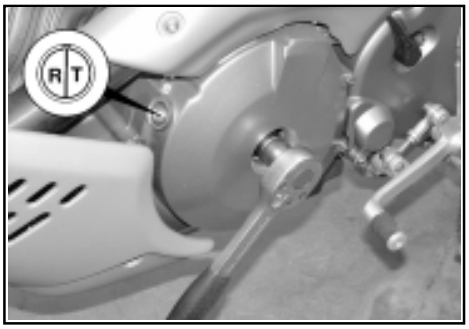

Downloaded from www.Manualslib.com manuals search engine

- Check the valve tappet clearance of the N° 2 cylinder (rear) using the same procedure used for the N° 1 cylinder (front) and adjust as necessary.

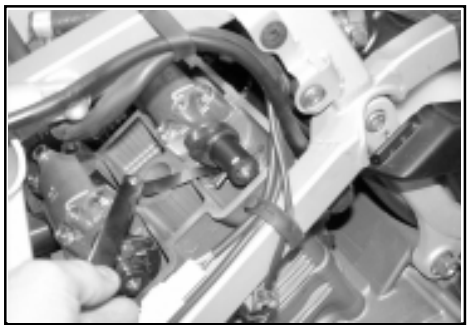

VALVE TAPPET CLEARANCE ADJUSTMENT

The valve tappet clearance adjustment is regulated by the substitution of the valve stem pad with another that is thicker or thinner.

- After having removed the cylinder head valve covers, remove the intake and exhaust camshafts as described in chapter D.
- Remove the cup and pad with the fingers or a magnet.
- Check the number on the pad. This number indicates the thickness of the pad as illustrated.
- Choose a substitute pad that allows a valve tappet clearance within the prescribed range. There are 25 sizes of pad available that vary in thickness from 2.30 mm to 3.50 mm in increments of 0.05 mm. Insert the chosen pad into the valve stem end with the numbers towards the cam.
  Check the thickness of the pad with a micrometer to ascertain that it is the correct size.
  See the selection table of the thickness of the pads for details. (Pages B-10 and B-11).

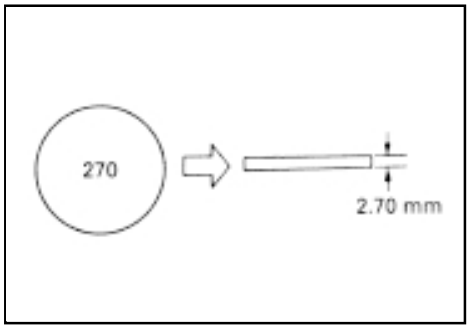

** Do not forget to apply some engine oil to the surfaces of the pad.*
** During the positioning of the pad, check that the surface with the numbers points towards the tappets.*

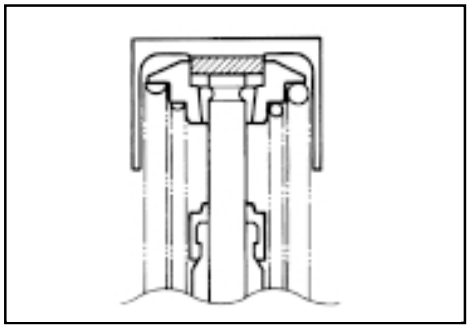

Reassemble the camshafts in the correct way.
(See page D-102)

- After having reassembled the pads and the camshafts, rotate the engine so that the valve mechanism becomes completely depressed. This causes the expulsion of any oil entrapped in the seat between the pad and the cam that could probably cause incorrect clearances. Check again the clearance to verify that it is within the prescribed limits.

- Reassemble the following parts after having completed the valve tappet clearance check.

	Page
* Cylinder head valve covers	D-78
* Spark plugs and insulated caps	B-5 e B-6
* Timing synchronisation inspection cover	D-79
* Generator cover screw	D-79

Downloaded from www.Manualslib.com manuals search engine

INTAKE VALVE PADS SELECTION TABLE
NO. (12892.41C00.XXX)

(INTAKE SIDE)

VALVE PAD SET (12800-41810)

OPTIONAL

MEASURED CLEARANCE (mm)	SUFFIX NO. / ACTUAL PAD THICKNESS (mm)	230	235	240	245	250	255	260	265	270	275	280	285	290	295	300	305	310	315	320	325	330	335	340	345	350
0.00–0.04		2.30	2.35	2.40	2.45	2.50	2.55	2.60	2.65	2.70	2.75	2.80	2.85	2.90	2.95	3.00	3.05	3.10	3.15	3.20	3.25	3.30	3.35	3.40	3.45	3.50
0.05–0.09		2.30	2.35	2.40	2.45	2.50	2.55	2.60	2.65	2.70	2.75	2.80	2.85	2.90	2.95	3.00	3.05	3.10	3.15	3.20	3.25	3.30	3.35	3.40	3.45	3.50
0.10–0.20		2.40	2.45	2.50	2.55	2.60	2.65	2.70	2.75	2.80	SPECIFIED CLEARANCE/NO ADJUSTMENT NECESSARY															
0.21–0.25		2.40	2.45	2.50	2.55	2.60	2.65	2.70	2.75	2.80	2.85	2.90	2.95	3.00	3.05	3.10	3.15	3.20	3.25	3.30	3.35	3.40	3.45	3.50	3.50	
0.26–0.30		2.45	2.50	2.55	2.60	2.65	2.70	2.75	2.80	2.85	2.90	2.95	3.00	3.05	3.10	3.15	3.20	3.25	3.30	3.35	3.40	3.45	3.50	3.50		
0.31–0.35		2.50	2.55	2.60	2.65	2.70	2.75	2.80	2.85	2.90	2.95	3.00	3.05	3.10	3.15	3.20	3.25	3.30	3.35	3.40	3.45	3.50	3.50			
0.36–0.40		2.55	2.60	2.65	2.70	2.75	2.80	2.85	2.90	2.95	3.00	3.05	3.10	3.15	3.20	3.25	3.30	3.35	3.40	3.45	3.50	3.50				
0.41–0.45		2.60	2.65	2.70	2.75	2.80	2.85	2.90	2.95	3.00	3.05	3.10	3.15	3.20	3.25	3.30	3.35	3.40	3.45	3.50	3.50					
0.46–0.50		2.65	2.70	2.75	2.80	2.85	2.90	2.95	3.00	3.05	3.10	3.15	3.20	3.25	3.30	3.35	3.40	3.45	3.50	3.50						
0.51–0.55		2.70	2.75	2.80	2.85	2.90	2.95	3.00	3.05	3.10	3.15	3.20	3.25	3.30	3.35	3.40	3.45	3.50	3.50							
0.56–0.60		2.75	2.80	2.85	2.90	2.95	3.00	3.05	3.10	3.15	3.20	3.25	3.30	3.35	3.40	3.45	3.50	3.50								
0.61–0.65		2.80	2.85	2.90	2.95	3.00	3.05	3.10	3.15	3.20	3.25	3.30	3.35	3.40	3.45	3.50	3.50									
0.66–0.70		2.85	2.90	2.95	3.00	3.05	3.10	3.15	3.20	3.25	3.30	3.35	3.40	3.45	3.50	3.50										
0.71–0.75		2.90	2.95	3.00	3.05	3.10	3.15	3.20	3.25	3.30	3.35	3.40	3.45	3.50	3.50											
0.76–0.80		2.95	3.00	3.05	3.10	3.15	3.20	3.25	3.30	3.35	3.40	3.45	3.50	3.50												
0.81–0.85		3.00	3.05	3.10	3.15	3.20	3.25	3.30	3.35	3.40	3.45	3.50	3.50													
0.86–0.90		3.05	3.10	3.15	3.20	3.25	3.30	3.35	3.40	3.45	3.50	3.50														
0.91–0.95		3.10	3.15	3.20	3.25	3.30	3.35	3.40	3.45	3.50	3.50															
0.96–1.00		3.15	3.20	3.25	3.30	3.35	3.40	3.45	3.50	3.50																
1.01–1.05		3.20	3.25	3.30	3.35	3.40	3.45	3.50	3.50																	
1.06–1.10		3.25	3.30	3.35	3.40	3.45	3.50	3.50																		
1.11–1.15		3.30	3.35	3.40	3.45	3.50	3.50																			
1.16–1.20		3.35	3.40	3.45	3.50	3.50																				
1.21–1.25		3.40	3.45	3.50	3.50																					
1.26–1.30		3.45	3.50	3.50																						
1.31–1.35		3.50	3.50																							
1.36–1.40		3.50																								

HOW TO USE THIS TABLE:
1. Measure the clearance of the valve (cold engine).
2. Measure the thickness of the actual pad.
3. Make the vertical column (valve tappet clearance) and horizontal column (thickness) match.

FOR EXAMPLE

The valve tappet clearance is	0.23 mm
The thickness of the actual pad is	0.70 mm
The pad to use is	2.80 mm

Downloaded from www.Manualslib.com manuals search engine

Downloaded from www.Manualslib.com manuals search engine

EXHAUST VALVE PADS SELECTION TABLE
NO. (12892.41C00.XXX)

OPTIONAL

VALVE PAD SET (12800-41810)

MEASURED CLEARANCE (mm) / SUFFIX NO.	230	235	240	245	250	255	260	265	270	275	280	285	290	295	300	305	310	315	320	325	330	335	340	345	350
ACTUAL PAD THICKNESS (mm)	2.30	2.35	2.40	2.45	2.50	2.550	2.60	2.65	2.70	2.75	2.80	2.85	2.90	2.95	3.00	3.05	3.10	3.15	3.20	3.25	3.30	3.35	3.40	3.45	3.50
0.00 – 0.04					2.30	2.35	2.40	2.45	2.50	2.55	2.60	2.65	2.70	2.75	2.80	2.85	2.90	2.95	3.00	3.05	3.10	3.15	3.20	3.25	3.30
0.05 – 0.09				2.30	2.35	2.40	2.45	2.50	2.55	2.60	2.65	2.70	2.75	2.80	2.85	2.90	2.95	3.00	3.05	3.10	3.15	3.20	3.25	3.30	3.35
0.10 – 0.14			2.30	2.35	2.40	2.45	2.50	2.55	2.60	2.65	2.70	2.75	2.80	2.85	2.90	2.95	3.00	3.05	3.10	3.15	3.20	3.25	3.30	3.35	3.40
0.15 – 0.19		2.30	2.35	2.40	2.45	2.50	2.55	2.60	2.65	2.70	2.75	2.80	2.85	2.90	2.95	3.00	3.05	3.10	3.15	3.20	3.25	3.30	3.35	3.40	3.45
0.20 – 0.30	SPECIFIED CLEARANCE/NO ADJUSTMENT NECESSARY																								
0.31 – 0.35	2.40	2.45	2.50	2.55	2.60	2.65	2.70	2.75	2.80	2.85	2.90	2.95	3.00	3.05	3.10	3.15	3.20	3.25	3.30	3.35	3.40	3.45	3.50	3.50	
0.36 – 0.40	2.45	2.50	2.55	2.60	2.65	2.70	2.75	2.80	2.85	2.90	2.95	3.00	3.05	3.10	3.15	3.20	3.25	3.30	3.35	3.40	3.45	3.50	3.50		
0.41 – 0.45	2.50	2.55	2.60	2.65	2.70	2.75	2.80	2.85	2.90	2.95	3.00	3.05	3.10	3.15	3.20	3.25	3.30	3.35	3.40	3.45	3.50	3.50			
0.46 – 0.50	2.55	2.60	2.65	2.70	2.75	2.80	2.85	2.90	2.95	3.00	3.05	3.10	3.15	3.20	3.25	3.30	3.35	3.40	3.45	3.50	3.50				
0.51 – 0.55	2.60	2.65	2.70	2.75	2.80	2.85	2.90	2.95	3.00	3.05	3.10	3.15	3.20	3.25	3.30	3.35	3.40	3.45	3.50	3.50					
0.56 – 0.60	2.65	2.70	2.75	2.80	2.85	2.90	2.95	3.00	3.05	3.10	3.15	3.20	3.25	3.30	3.35	3.40	3.45	3.50	3.50						
0.61 – 0.65	2.70	2.75	2.80	2.85	2.90	2.95	3.00	3.05	3.10	3.15	3.20	3.25	3.30	3.35	3.40	3.45	3.50	3.50							
0.66 – 0.70	2.75	2.80	2.85	2.90	2.95	3.00	3.05	3.10	3.15	3.20	3.25	3.30	3.35	3.40	3.45	3.50	3.50								
0.71 – 0.75	2.80	2.85	2.90	2.95	3.00	3.05	3.10	3.15	3.20	3.25	3.30	3.35	3.40	3.45	3.50	3.50									
0.76 – 0.80	2.85	2.90	2.95	3.00	3.05	3.10	3.15	3.20	3.25	3.30	3.35	3.40	3.45	3.50	3.50										
0.81 – 0.85	2.90	2.95	3.00	3.05	3.10	3.15	3.20	3.25	3.30	3.35	3.40	3.45	3.50	3.50											
0.86 – 0.90	2.95	3.00	3.05	3.10	3.15	3.20	3.25	3.30	3.35	3.40	3.45	3.50	3.50												
0.91 – 0.95	3.00	3.05	3.10	3.15	3.20	3.25	3.30	3.35	3.40	3.45	3.50	3.50													
0.96 – 1.00	3.05	3.10	3.15	3.20	3.25	3.30	3.35	3.40	3.45	3.50	3.50														
1.01 – 1.05	3.10	3.15	3.20	3.25	3.30	3.35	3.40	3.45	3.50	3.50															
1.06 – 1.10	3.15	3.20	3.25	3.30	3.35	3.40	3.45	3.50	3.50																
1.11 – 1.15	3.20	3.25	3.30	3.35	3.40	3.45	3.50	3.50																	
1.16 – 1.20	3.25	3.30	3.35	3.40	3.45	3.50	3.50																		
1.21 – 1.25	3.30	3.35	3.40	3.45	3.50	3.50																			
1.26 – 1.30	3.35	3.40	3.45	3.50	3.50																				
1.31 – 1.35	3.40	3.45	3.50	3.50																					
1.36 – 1.40	3.45	3.50	3.50																						
1.41 – 1.45	3.50	3.50																							
1.46 – 1.50	3.50																								

(EXHAUST SIDE)

HOW TO USE THIS TABLE:
1. Measure the clearance of the valve (cold engine).
2. Measure the thickness of the actual pad.
3. Make the vertical column (valve tappet clearance) and horizontal column (thickness) match.

FOR EXAMPLE

The valve tappet clearance is	0.23 mm
The thickness of the actual pad is	0.70 mm
The pad to use is	2.80 mm

FUEL TUBING

Check every 6000 km (or 6 months).
Substitute every 4 years.

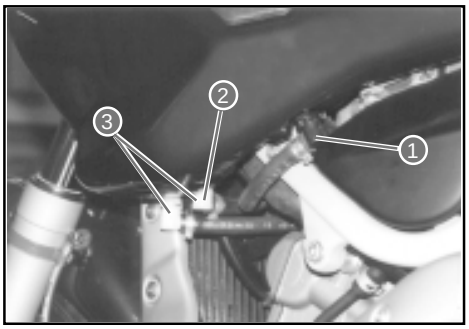

After removing the fuel tank, check to see if the feed tube **1** and return tubes **2** and **3** are damaged or show signs of leaking. Substitute the tubes if any defects are found.

ENGINE OIL AND OIL FILTER

(ENGINE OIL)
Change at 1000 km (or 1 month).
Change every 6000 km (or 6 months).

(OIL FILTER)
Substitute at 1000 km (or 1 month).
Substitute every 18000 km (18 months).

The oil must be changed whilst the engine is hot. The oil filter must be substituted at the above-mentioned intervals at the same time as an oil change.

ENGINE OIL CHANGE

- Place the machine in a vertical position.
- Place a container underneath the engine and drain the used oil into the container by unscrewing the sump plug **1** and the filling plug **2**.

Used oil contains dangerous substances that can damage the environment. To change the oil it is recommended to use our service network that can dispose of the oil respecting the environment and the norms in force.

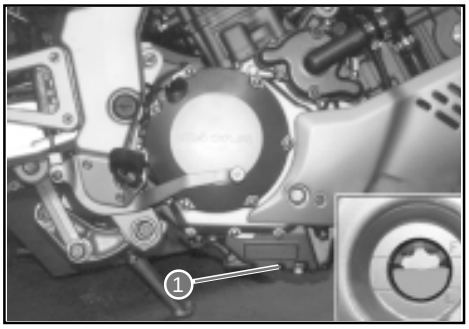

- Tighten the sump plug **1** to the specified torque and pour new oil into the filling hole 2. The engine holds 3.1 litres of oil. Use only oil with an API SF or SG classification and a viscosity of SAE 10W/40.

Torque pressure
Sump plug: 23 N.m (2.3 kg-m)

- Switch on the engine and leave it to heat up for several minutes.
- Switch off the engine and wait approximately one minute. Check the oil level in the inspection window **3**. If the level is below the countersign “L”, add oil until it reaches the countersign “F”. If the level exceeds the countersign “F” then discharge enough oil to arrive at the countersign “F”.

Downloaded from www.Manualslib.com manuals search engine

OIL FILTER SUBSTITUTION

- Drain the engine oil following the same procedure described for the oil change.
- Remove the oil filter **1** utilising the appropriate wrench (special tool).
- Apply a light layer of engine oil to the gasket of the new filter before assembly.
- Assemble the new filter by screwing it in by hand until the gasket comes into contact with the oil filter container. Tighten by two turns utilising the oil filter wrench (special tool).

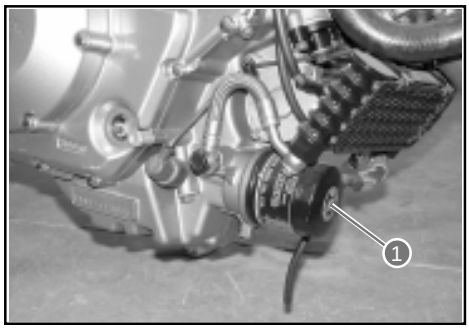

Special tool: 800096659: Oil filter wrench

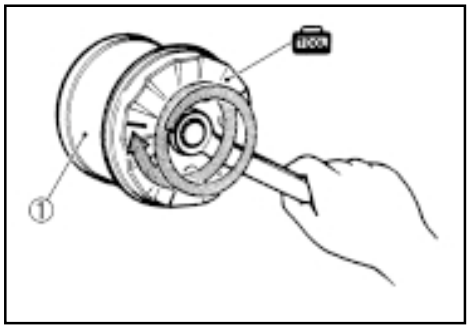

Tighten the filter correctly by utilising the special wrench.
Never tighten the oil filter by hand.

- Refill with new engine oil and check the level by following the same procedure used for the oil change.

OIL CAPACITY
Oil change: 3.1 litres
Oil filter change: 3.3 litres
Engine overhaul: 3.6 litres

Utilise only <u>ORIGINAL CAGIVA OIL FILTERS</u>. Filters and spare parts of other makes could differ with regards to the threading (diameter and pitch), filter performance and duration. Possible damage may occur to the engine with consequent loss of oil.

MINIMUM TICKOVER

Check at 1000 km (or 1 month).
Every 6000 km (or 6 months).

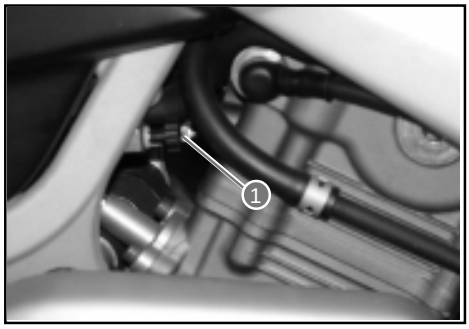

Carry out this adjustment when the engine is hot.

- Switch on the engine and adjust the tickover as specified by rotating the accelerator stop screw **1**.

Minimum tickover:
1300±1350 rpm

Downloaded from www.Manualslib.com manuals search engine

ACCELERATOR CABLE PLAY

Check at 1000 km (or 1 month)
Every 6000 km (or 6 months).

Adjust the accelerator cable play following these three phases.

First phase:
- Slacken the locknut **1** of the accelerator return cable **B** and completely screw in the screw adjuster **2**.

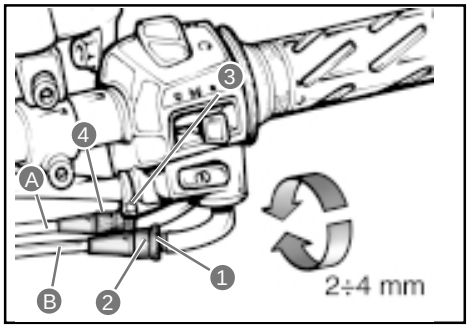

Second phase:
- Slacken the locknut **3** of the accelerator opening cable **A**.
- Screw or unscrew the screw adjuster **4** until the accelerator cable play is 2.0 – 4.0 mm at the accelerator handgrip.
- Tighten the locknut **3** whilst keeping the screw adjuster **4** locked in position.

Third phase:
- Keeping the accelerator handgrip in the closed position, slowly unscrew the screw adjuster **2** of the accelerator return cable **B** until a resistance is felt.
- Tighten the locknut **1** whilst keeping the screw adjuster **2** locked in position.

Accelerator cable play: 2.0-4.0 mm

After making the adjustments, check that the handlebar movement does not cause an increase in the tickover. The accelerator handgrip should return smoothly and automatically into position without any stiffness.

Greater adjustments can be carried out using the lateral adjuster on the butterfly valve body of the carburettor.

SYNCHRONISATION OF THE CARBURETTORS

Check every 12000 km (or 12 months)

(See page C-73)

Downloaded from www.Manualslib.com manuals search engine

CLUTCH

Check every 6000 km (or 6 months).

- Remove the speed sensor **1**.
- Remove the left hand footrest from the frame by unscrewing the two relative screws.
- Remove the engine pinion cover **2** by unscrewing the three relative screws.
- Remove the exhaust protection **3**.

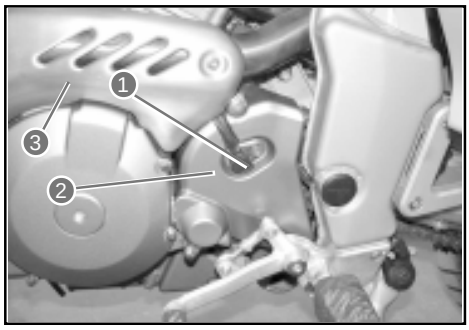

- Screw in the clutch lever assembly adjuster screw **8**.
- Slacken the locknut **4** and completely unscrew the screw adjuster **5**.
- Slacken the locknut **6** and rotate the screw adjuster **7** to obtain 5 - 10 degrees of play at the end of the clutch lever.
- Tighten the locknut **6**.
- Slowly screw in the adjuster screw **5** until resistance is felt.
- Unscrew the screw adjuster **5** a $^{1}/_{4}$ of a turn and then tighten the locknut **4**.

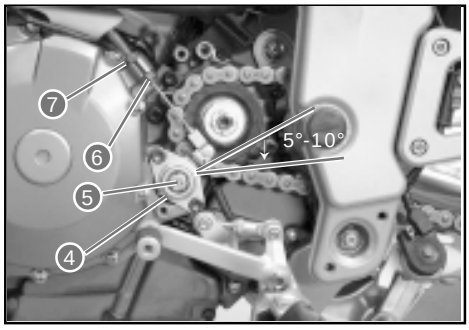

- Screw or unscrew the screw adjuster **8** to obtain 10-15 mm of play **A** at the end of the clutch lever.

Clutch lever play A: 10-15 mm

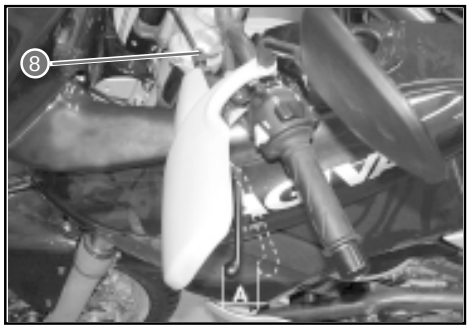

COOLING SYSTEM

Check every 1000 km (or 1 month)
Substitute the engine coolant every two years

ENGINE COOLANT LEVEL CHECK

The cooling of the engine is by forced circulation with a centrifugal pump (situated on the left side of the engine), a by-pass valve thermostat and a radiator. The opening of the thermostat and the consequent flow of liquid in the radiator are activated when the temperature reaches ª 82°C. (maximum opening 95°C.). The system contains ª 2.3 litres of AGIP COOL engine coolant.
Make sure that the machine is on level ground and that it is in a vertical position with both wheels placed on the ground.
Check that the level inside the expansion tank is between the MIN and MAX levels shown on the left hand side of the machine **2**.
If necessary, top up the engine coolant via the cap **1** positioned underneath the seat.

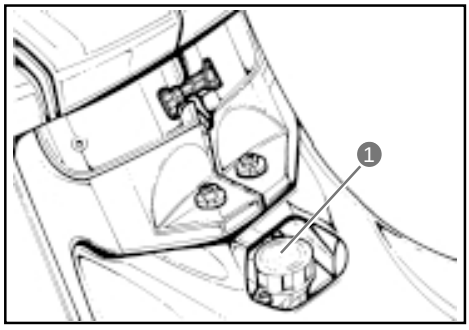

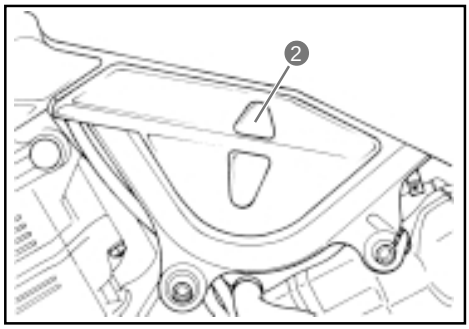

Downloaded from www.Manualslib.com manuals search engine

ENGINE COOLANT CHANGE



- After having removed the tank, remove the radiator cap **1**, the expansion tank cap and the drain plugs **2** end **3**. Drain the engine coolant.

*** Do not remove the radiator cap when the engine is hot. Boiling liquid or steam can cause serious burns.**
*** The engine coolant is harmful if swallowed or if it comes into contact with the skin or the eyes. If the coolant comes into contact with the skin or eyes, rinse abundantly with water. If it is swallowed, provocate vomiting and immediately call a doctor.**

- Wash the radiator with water if necessary.
- Tighten the coolant drain plugs **2** and **3** to the specified torque.

Torque pressure
Coolant drain plugs 2 and 3: 13 N.m (1.3 kg-m)

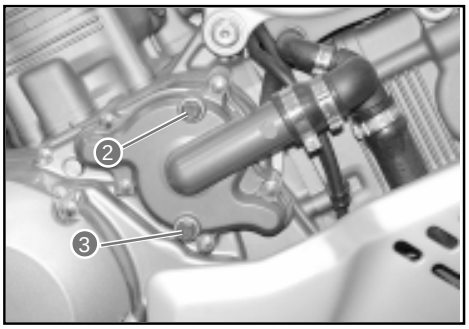

- Via the refill hole **5**, fill the radiator with the specified engine coolant until it reaches the neck of the radiator.
- Bleed air out of the system via the bleed nut **2**.

See chapter H for information regarding the engine coolant.

- Tighten the air bleed nut to the specified torque.

Torque pressure
Air bleed nut 4: 13 N.m (1,3 kg-m)

- Switch on the engine and completely bleed the air from the system via the radiator neck.
- Add engine coolant until it reaches the neck of the radiator.
- Tightly close the radiator cap **1**.
- Add coolant until it reaches the maximum level of the expansion tank.
- Tightly close the expansion tank cap.
- Heat up the engine and then let it cool. Add engine coolant until the upper level mark of the tank.

Repeat the above-mentioned procedure several times to check that the radiator is completely full of engine coolant. The upper level of the coolant is shown on the side of the tank.

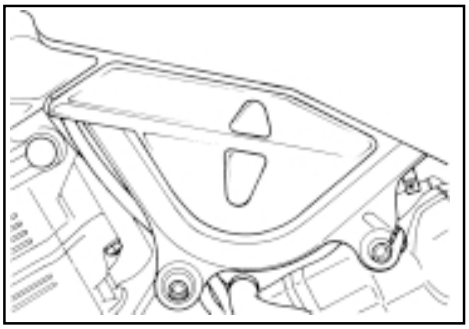

Engine coolant capacity: 2000 ml

Downloaded from www.Manualslib.com manuals search engine

RADIATOR TUBES

- Remove the sump guard protection **5** by unscrewing the two screws **6** indicated in the figure. Push it aside in the direction of the arrow.

Check to see if the radiator tubes are damaged, cracked or leak. If any defect is found, substitute the tubes immediately.

TRANSMISSION CHAIN

Check at 1000 km (or 1 month)
Every 6000 km (or 6 months)
Clean and lubricate every 1000 km.

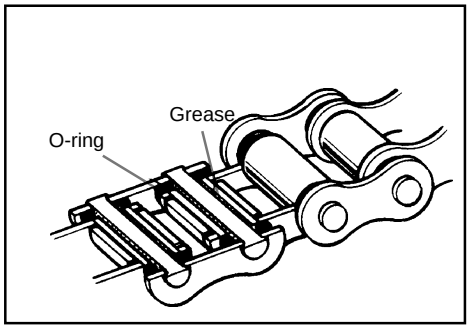

Visually check the transmission chain for the following defects. Put the machine on a jack and a block of wood. Slowly rotate the rear wheel by hand with the engine in neutral.

* Slack pins
* Damaged rollers
* Dry or rusty links
* Missing O-rings
* Excessive wear
* Incorrect chain adjustment
* Bent or seized links

The chain must be substituted if any one of these defects is found.

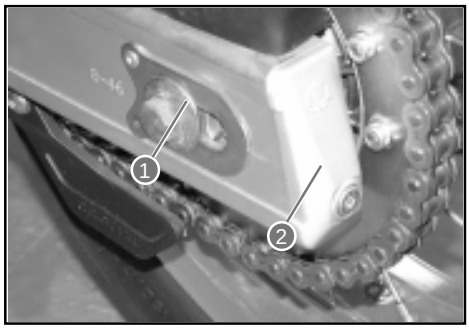

Substitute also the crown and pinion wheels when substituting the transmission chain.

CHECK

- Slacken the axle nut **1**.
- Completely tighten the chain by adjusting the screw adjusters **2**.

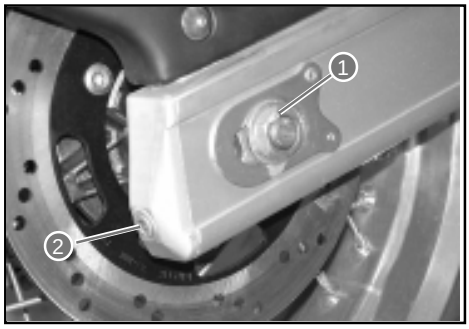

- Count 21 pins (20 pitches) of the chain and measure the distance between the two points. If the distance exceeds the operating limits, the chain must be substituted.

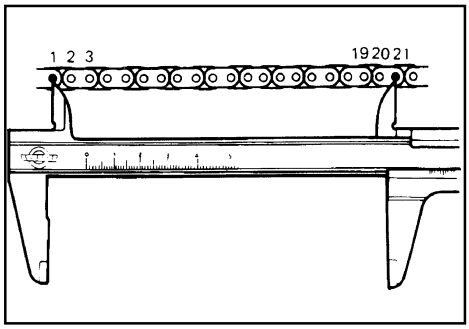

Operating limit (20 pitches of the transmission chain):
323 mm

Downloaded from www.Manualslib.com manuals search engine

CHAIN ADJUSTMENT

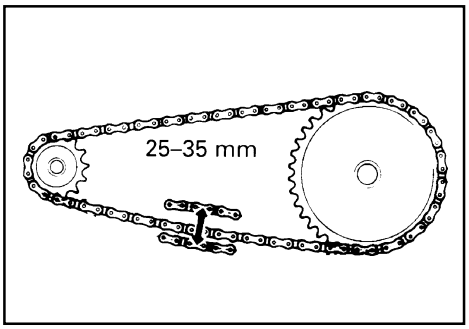

- Slacken or tighten both chain screw adjusters **1** until the chain reaches a slack of 25-35 mm in the central position of the chain between the crown and pinion. The marks **A** on both screw adjusters must be in the same position of the scale to ensure the correct alignment of the wheel.
- To make accurate adjustments, place the machine on the side stand.
- After having correctly adjusted the chain, tighten the axle nut **2** to the specified torque.
- Recheck the chain slack after having tightened the axle nut **2**.

Torque pressure
Rear axle nut: 63,7÷ 68,6 N·m (6,5 ÷ 7 kg-m)

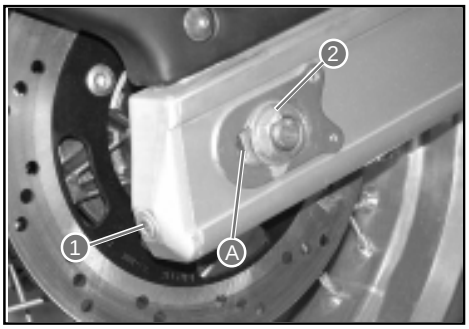

CLEANING AND LUBRICATION

- Wash the chain with kerosene. If the chain tends to rust quickly, shorten the maintenance intervals.



Do not use Trichloroethylene, petrol or other similar liquids. These liquids possess an excessive solvent power and more importantly, can damage the O-rings that keep the grease inside the spaces between the rollers and pins. Long life of the chain depends on the presence of grease in these spaces.

- After having washed and dried the chain, grease it with high viscosity engine oil or with lubricants specifically produced for chains with O-rings.

Downloaded from www.Manualslib.com manuals search engine

BRAKES

(BRAKES)
Check at 1000 km (or 1 month)
Every 6000 km (or 6 months)

(BRAKE AND BRAKE FLUID TUBING)
Check every 6000 km (or 6 months). Substitute the tubes every four years. Substitute the brake fluid every two years.

BRAKE FLUID LEVEL CHECK

- Place the machine in a vertical position with the handlebars straight.
- Check the level of the brake fluid by observing the minimum level mark on the front **1** and rear **2** brake fluid chambers.
- If the level is inferior to the minimum level mark, add brake fluid to the following specification.

Specification and classification: DOT 4

The braking system of this machine has been filled with glycol-based brake fluid. Do not use or mix different types of fluids such as silicone or petrol-based fluids. Do not use brake fluid from old, used or non-sealed containers. Do not use leftover fluids from previous maintenance or left for long periods of time.

Spillage or leaks of brake fluid are dangerous and immediately discolour painted surfaces. Check the brake tubing and joints for cracks or leaks before riding.

BRAKE PADS

- Remove the blocking plates **1** and the locating pins**.**
- Pull out the pads from underneath.

The wear of the pads can be visually checked by observing the groove **A** on the surface of the pad. When the groove disappears, it is necessary to substitute the pads (see chapter about the braking system).

When reassembling, make sure that the pads are completely inserted into their positions. Consult the chapter about the braking system.

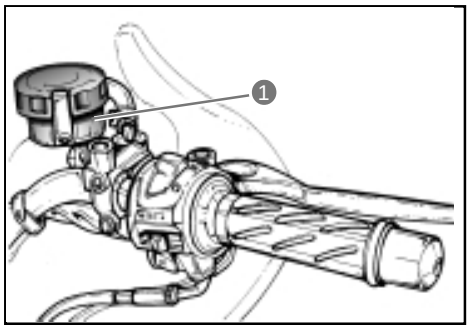

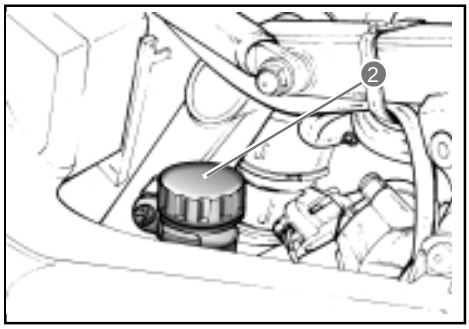

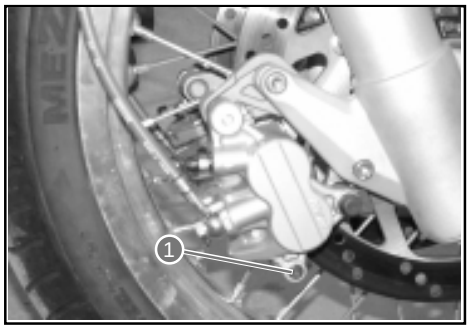

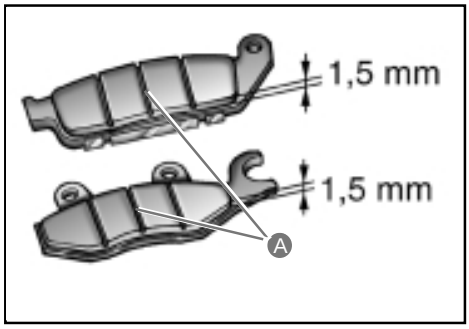

Downloaded from www.Manualslib.com manuals search engine

- To change the rear brake pads, proceed as follows:
- Remove the two screws of the rear spray guard **3** rotate it as shown in the figure.

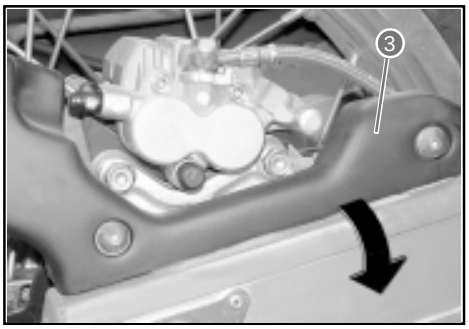

Substitute the pads in pairs to guarantee maximum braking performance..

BRAKE PEDAL HEIGHT

The rear brake pedal must have a travel of 10-15 mm before the braking action takes place. If it is necessary, make the adjustment as follows:

- Slacken the nut **5**;
- Using nuts **6** or **7**, position the pedal in the desired position.
- When the adjustment is completed, tighten the nut **7.**

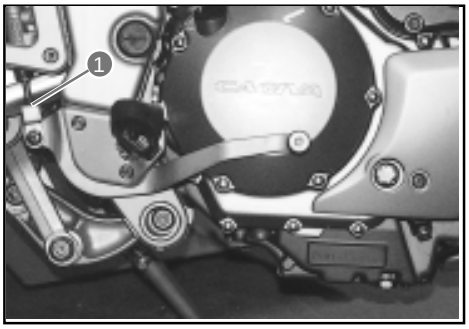

Torque pressure
Rear brake pedal locknut 1: 18 N.m (1.8 kg-m)

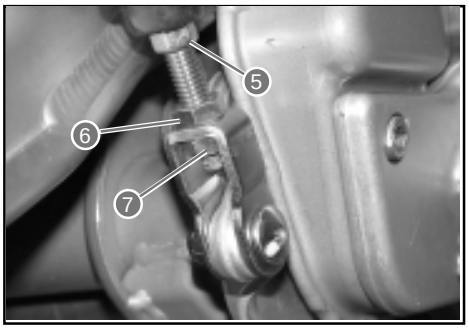

MAINTENANCE

To change the rear brake disc pads, proceed as follows:

- Remove the 2 screws **1** of the rear mudguard **2** and rotate it as shown in the figure.
- Remove the pincer assembly from the forks by unscrewing the 2 relative screws **3**.
- Remove the 2 pins **4** that keep the pads in place.

Proceed with checking the pads for wear in the same way as for the front brake pads.
Reassemble everything in the reverse order of removal.

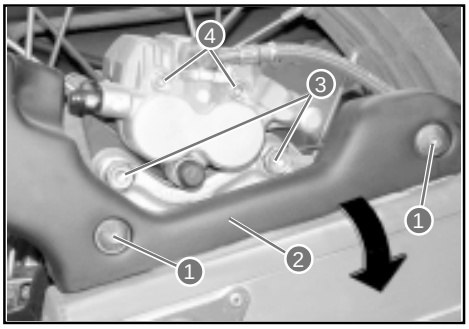

Downloaded from www.Manualslib.com manuals search engine

BLEEDING THE AIR FROM THE BRAKING SYSTEM

The air that is trapped in the braking system acts as a cushion, absorbing the greater part of the pressure exerted by the brake pump. The performance of the brake pincer is therefore compromised. The presence of air in the system is indicated by a “sponginess” of the brake lever or pedal and a reduction in the braking performance. As this situation could be highly dangerous for both rider and the machine, it is necessary to effect the bleeding of the air from the braking system immediately following maintenance on the brakes. This procedure is carried out as follows:

- Refill the brake fluid chamber with brake fluid until it reaches the “UPPER” mark.
- Replace the chamber cover to avoid the entry of dirt.
- Remove the rubber cap and apply a plastic tube to the bleed valve nipple. Insert the free end of the tube in a container.



Torque pressure
Air bleed valve nipple: 7.5 N.m (0.75 kg-m)

- Front brake: bleed out the air via the bleed valve nipple.
- Squeeze and release the brake lever several times in rapid succession and then squeeze it without releasing the lever. Slacken the bleed valve nipple rotating it a 1/4 of a turn so that the fluid can pour out into the container. This releases the tension on the brake lever and allows it to move towards the handgrip of the handlebar. Close the valve, squeeze and release the brake lever again and reopen the valve. Repeat this operation until the fluid that pours into the container does not contain bubbles of air.
- The bleeding must be carried out on both front brake pincers at the same time.



During the bleeding of the brake system, top up the brake fluid chamber with brake fluid as necessary. There must always be brake fluid in the chamber.

- Close the bleed valve nipple and disconnect the plastic tube. Refill the brake fluid chamber with brake fluid until the fluid reaches the “UPPER” mark.

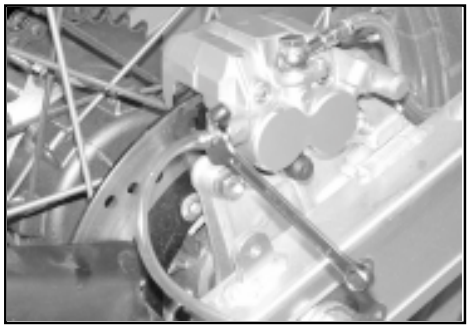

Handle brake fluids with care. They chemically react with paint, rubber, etc.

- The only difference in the procedure for the rear brake is that it is a pedal and not a lever that activates the brake.



Downloaded from www.Manualslib.com manuals search engine

TYRES

Check every 6000 km (or 6 months)

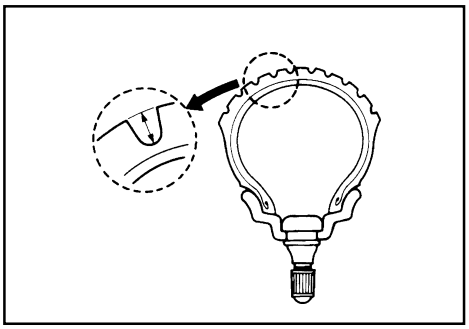

CONDITION OF THE TREAD

Badly worn tyres decrease the road holding and are therefore dangerous. It is recommended that tyres be changed when the tread reaches the minimum level.

Operating limit
Tread depth (front): 2.0 mm
(rear): 2.0 mm

TYRE PRESSURES

If the tyre pressures are too high or too low, the steering is negatively influenced and tyre wear is accelerated.
Maintain the correct tyre pressures to obtain the maximum road holding and the maximum life from the tyres.
Cold tyre pressures are as follows:

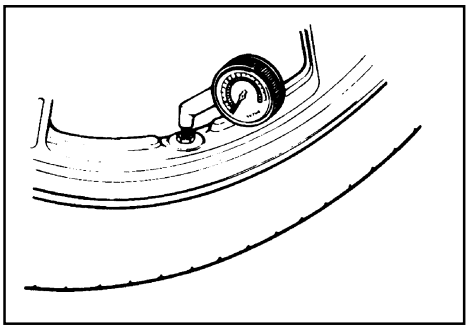

COLD TYRE PRESSURE	RIDER ONLY		RIDER + PASS.	
	kPa	kg/cm²	kPa	kg/cm²
FRONT	220	2,2	240	2,4
REAR	240	2,4	260	2,6

The standard tyres mounted on this machine are 110/80 – 18" for the front wheel and 150/70 – 17" for the rear wheel. The use of different tyres to those specified could cause instability. It is highly recommended to use tyres of the prescribed size.

TYRE TYPE

TUBELESS

STEERING

Check at 1000 km (or 1 month)
Every 12000 km (or 12 months)

The steering must be adjusted correctly to obtain a smooth rotating action of the handlebar and a safe ride. Steering that is too stiff obstructs the smooth rotation of the handlebars whilst steering that is too slack brings poor stability to the machine. Place the machine on its stand so that the front wheel is raised from the ground. Grip the forks where the wheel hub is and pull forwards to check that the steering head play is not excessive. If excessive play is found, carry out the adjustment of the steering bearings as described in the Suspension chapter of this manual.

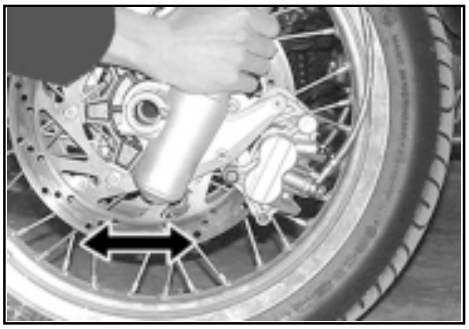

Downloaded from www.Manualslib.com manuals search engine

COMPRESSION TEST

The compression of a cylinder is an optimum indicator of the internal condition of the engine.
The decision to overhaul the engine is often the result of a compression test. Amongst the periodical maintenance data to be found at the dealer are also the compression measurements for each maintenance operation.

COMPRESSION SPECIFICATION (automatic decompression activated)

Standard	Limit	Difference
1300-1700 kPa (13-17 kg/cm^2)	1100 kPa (11 kg/cm^2)	200kPa (2 kg/cm^2)

Low compression could indicate one of the following conditions:
* Worn piston or piston rings
* Piston rings seized in the grooves
* Poor valve closure
* Head gasket broken or defective

Overhaul the engine in the following cases:
* The compression of one of the cylinders is less than 1100 kPa (11 kg/cm^2).
* The difference between the compression of the two cylinders is more than 200 kPa.
* All values of the compression are less than 1300 kPa (13 kg/cm^2) even if they are more than 1100 kPa (11 kg/cm^2).

COMPRESSION TEST PROCEDURE

** Before verifying the engine compression, check that the cylinder head bolts are tightened to the correct torque and that the valves are adjusted correctly.*
** Heat up the engine before proceeding with the test.*
** Check that the battery is fully charged.*

- Carry out the compression test as follows:
- Remove the seat and the plastic underneath the seat.
- Remove both spark plugs (see page B-7.)
- Screw in the compression meter in one of the spark plug holes making sure that it is correctly tightened.
- Keep the accelerator handgrip in the fully open position.
- Turn over the engine with the electric starter motor for several seconds and note the maximum reading of the compression meter. This is the compression of that cylinder.
- Repeat the procedure for the other cylinder.

Special tool: 800096660: Compression meter
800096652: Compression sensor adaptor



Downloaded from www.Manualslib.com manuals search engine

OIL PRESSURE TEST

Periodically check the oil pressure for an approximate evaluation of the condition of the moving parts of the engine.

OIL PRESSURE SPECIFICATION

More than 300 kPa (3.0 kg/cm²) at 3000 rpm, oil temperature 60°C. Less than 600 kPa (6.0 kg/cm²)

If the pressure of the oil is more or less than those specified, consider the following causes:

LOW OIL PRESSURE
* Oil filter blocked
* Oil leak in the system
* O-ring damaged
* Defective oil pump
* One or more of these problems together

HIGH OIL PRESSURE
* Excessive oil viscosity
* Oilways blocked
* Or both problems together

OIL PRESSURE TEST PROCEDURE

Switch on the engine and check that the oil pressure warning light is illuminated. If it remains illuminated, check the electrical circuit of the oil pressure warning light. If the circuit is in good condition, check the oil pressure as follows:

- Remove the plug from the main oil way.
- Insert the oil manometer along with its attachment in the position indicated.
- Heat up the engine as follows:
  Summer: 10 minutes at 2000 rpm
  Winter: 20 minutes at 2000 rpm
- After the heating up, increase the speed to 3000 rpm (check the revcounter) and take the reading of the oil manometer.



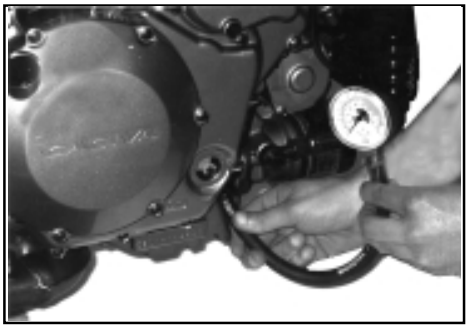

Special tool: 80009661: oil pressure measuring tube
800096662: oil pressure measuring adaptor
800096663: instrument (for high pressures)

Torque pressure
Main oil way plug: 10 N.m (1.0 kg-m)

Downloaded from www.Manualslib.com manuals search engine

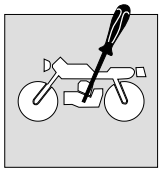

TECHNICAL DATA

VALVE + GUIDE

Unit: mm

PART	STANDARD		LIMIT
Valve diameter	Intake	40	———
	Exhaust	33	———
Valve tappet clearance (cold)	Intake	0.10-0.20	———
	Exhaust	0.20-0.30	———
Valve stem/guide play	Intake	0.010-0.037	———
	Exhaust	0.030-0.057	———
Valve stem distortion	Intake and Exhaust	———	0.35
Valve guide – internal diameter	Intake and Exhaust	5.500-5.512	———
Valve stem – external diameter	Intake	5.475-5.490	———
	Exhaust	5.455-5.470	———
Valve stem decentralising	Intake and Exhaust	———	0.05
Valve head thickness	Intake and Exhaust	———	0.5
Valve seat width	Intake and Exhaust	0.9-1.1	———
Valve head radial decentralising	Intake and Exhaust	———	0.03
Valve spring floating width (intake and exhaust)	Internal	———	37.0
	External	———	40.7
Valve spring tension (intake and exhaust)	Internal	6.2 kg at 33.1 mm length	———
	External	15.4 kg at 36.6 mm length	———

CAMSHAFT + CYLINDER HEAD

Unit: mm

PART	STANDARD		LIMIT
Cam height	Intake	37.770-37.838	37.47
	Exhaust	36.380-36.448	36.08
Camshaft seat pin oil play	Intake and exhaust	0.019-0.053	0.150
Camshaft seat support internal diameter	Intake and exhaust	22.012-22.025	———
Camshaft seat pin external diameter	Intake and exhaust	21.972-21.993	———
Camshaft decentralising	Intake and exhaust	———	0.10
Intermediate gearing push play/N° 2 timing sprocket	0.15-0.29		———
Cylinder head deformation	———		0.05

Downloaded from www.Manualslib.com manuals search engine

CYLINDER + PISTON + PISTON RINGS

Unit: mm

PART	STANDARD		LIMIT
Compression pressure (automatic decompression activated)	1300-1700 kPa (13-17 kg/cm²)		1100 kPa (11 kg/cm²)
Compression pressure difference	———		200 kPa (2 kg/cm²)
Piston/cylinder play	0.015-0.025		0,12
Cylinder diameter	98.000-98.015		Lines or scratches
Piston diameter	97.980-97.995 Measured 10 mm from the base of the skirt		97.880
Cylinder deformation	———		0.05
Piston ring floating end play	1st	Approx. 6.8	5.4
	2nd	Approx. 9.9	7.9
Piston ring end play	1st	0.15-0.35	0.5
	2nd	RN 0.15-0.30	0.5
Piston ring/groove play	1st	———	0.18
	2nd	———	0.15
Piston ring groove width	1st	0.93-0.95 1.55-1.57	——— ———
	2nd	1.01-1.03	———
	Oil scavenger ring	2.51-2.53	———
Piston ring width	1st	0.84-0.89	———
		1.40-1.42	———
	2nd	0.97-0.99	———
Gudgeon pin hole - internal diam.	22.002-22.008		22.030
Gudgeon pin - external diameter	21.992-22.000		21.980

CONNECTING ROD + CRANKSHAFT

Unit: mm excluding the ratios

PART	STANDARD	LIMIT
Connecting rod big end - int. diam.	22.010-22.018	22.040
Connecting rod small end - lateral play	0.17-0.32	0.50
Connecting rod small end – width	21.95-23.00	———
Gudgeon pin length	44.17-44.22	———
Small end oil play	0.032-0.056	0.080
External diameter - Gudgeon pin	44.976-45.000	———
Seat pivot oil play	0.018-0.045	0.080
External diameter – seat pivot	47.985-48.000	———
Crankshaft axial play	0.050-0.100	———
Crankshaft bearing shell thickness	1.925-2.175	———

Downloaded from www.Manualslib.com manuals search engine

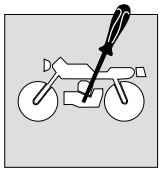

OIL PUMP

PART	STANDARD	LIMIT
Oil pump reduction ratio	1.301 (57/31 x 29/41)	———
Oil pressure (at 60°C.)	More than 300 kPa (3.0 kg/cm^2) at 3000 rpm	———

CLUTCH

PART	STANDARD	LIMIT
Clutch lever play	10-15	———
Clutch main plate thickness	2.92-3.08	———
Clutch main plate teeth width	———	12.9
Clutch disengagement screw	1/4 of a turn backwards	———
Clutch main plate deformation	———	0.10
Clutch spring floating length	———	29.6

THERMOSTAT + RADIATOR + FAN

Unit: mm excluding the ratios

PART		STANDARD	LIMIT
Thermostat valve opening temp.		82° C	———
Thermostat valve lifting up temp.		95° C	———
Radiator cap valve opening pressure		110 kPa (1,1 kg/cm^2)	———
Fan thermal switch activating temperature	OFF→ ON	Approx. 105° C	———
	ON→ OFF	Approx. 100° C	———
Coolant sensor resistance temperature	20° C	Approx. 2.45 kΩ	———
	50° C	Approx. 0.811 kΩ	———
	80° C	Approx. 0.318 kΩ	———
	110° C	Approx. 0.142 kΩ	———
	130° C	Approx. 0.088 kΩ	———

GEARCHANGE + TRANSMISSION CHAIN

Unit: mm excluding ratios

PART		STANDARD		LIMIT
Primary reduction ratio		1.838 (57/31)		———
Secondary reduction ratio		2.235 (58/17)		———
Gear ratios	1st	2.666 (32/12)		———
	2nd	1.933 (29/15)		———
	3rd	1.500 (27/18)		———
	4th	1.227 (27/22)		———
	5th	1.086 (25/23)		———
	6th	1.000 (24/24)		———
Crown/pinion ratio		2.562 (41/16)		———
Gearchange fork play		0.1-0.3		0.50
Gearchange fork width		5.0-5.1		———
Gearchange fork thickness		4.8-4.9		———
Transmission chain		Type	Regina 136 ORP	———
		Links	106 links	———
		Length: 20 pitches	———	323

Downloaded from www.Manualslib.com manuals search engine

PART	STANDARD	LIMIT
Transmission chain slack	25-35	———
Gearlever travel	5	———
Rear brake lever travel	10÷15	———

INJECTOR + FUEL PUMP + FUEL PRESSURE ADJUSTER

PART	TECHNICAL CHARACTERISTICS	NOTES
Injector resistance	11-16 ohms at 20°C.	
Fuel pump flow	Approx. 1 litre per minute at 290 kPa (2.9 kg/cm^2)	
Fuel pressure adjuster operating pressure	Approx. 290kPa (2.9 kg/cm^2)	

FI SENSOR + AIR INTAKE CONTROL VALVE

PART		TECHNICAL CHARACTERISTICS		NOTES
CMP sensor resistance		0.9-1.3 kΩ		
CMP sensor peak voltage		More than 0.8 V		
CKP sensor resistance		184-276 Ω		
CKP sensor peak voltage		More than 4 V		
IAP sensor incoming voltage		4.5-5.5 V		
IAP sensor outgoing voltage		Approx. 1.8 V at minimum		
TP sensor incoming voltage		4.5-5.5 V		
TP sensor resistance	(closed)	Approx. 1.2 kΩ		
	(open)	Approx. 4.4 kΩ		
TP sensor outgoing voltage	(closed)	Approx. 1,1 V		
	(open)	Approx. 4.2 V		
ECT sensor incoming voltage		4.5-5.5 V		
ECT sensor resistance		2.3-2.6 KΩ a 20° C		
IAT sensor incoming voltage		4.5-5.5 V		
IAT sensor resistance		2.2-2.7 kΩ a 20° C		
AP sensor incoming voltage		4.5-5.5 V		
AP sensor outgoing voltage		Approx. 3.6 V at 760 mmHg (100 kPa)		
TO sensor resistance		60-64 KΩ		
TO sensor voltage		Approx. 2.5 V		
GP sensor voltage		More than 0.6 V (from the 1st to the 6th)		
Injector voltage		Battery voltage		
Primary ignition coil peak voltage		More than 280 V (when the engine turns)		
VCSV resistance		36-44 kΩ		
Air intake control valve operating rpm	Opening rpm	More than 4000 rpm		
	Closing rpm	Les than 3800 rpm		

Downloaded from www.Manualslib.com manuals search engine

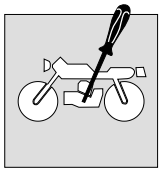

CARBURATORE

PART	TECHNICAL CHARACTERISTICS	
Minimum rpm - choke	2000 rpm at 20°-30°	3500-4000 at 90°
Minimum rpm – tickover	1300-1350 rpm	
Accelerator cable play	2.0-4.0 mm	

ELECTRICAL SYSTEM

Unit: mm excluding ratios

PART			TECHNICAL CHARACTERISTICS		NOTES
Timing synchronisation			3° BTDC at 1200 rpm		
Firing order1·2					
Spark plugs			Type	NGK: CR8EK Denso:U24ETR	
			Electrode gap	0.6-0.7	
Spark performance			More than 8 at 1 atm.		
Camshaft position sensor resistance			184-276 Ω		BI-G
Ignition coil resistance			Low	3-5 Ω	+ terminal / - terminal
			High	20-28 kΩ	+ terminal / spark plug insulated cover
Camshaft position sensor peak voltage			More than 4,0 V		
Primary ignition coil peak voltage			More than 280 V		
Generator winding resistance			0.1-1.0 Ω		Y - Y
Max. outgoing wattage-generator			Approx. 380W at 5000 rpm		
Generator voltage without a charge (cold engine)			More than 70V (CA) at 5000 rpm		
Ignition relay resistance			3-6 Ω		
Battery	Type		FIAMM 6E9		
	Capacity		12V (9 Ah) 32.4kC		
	Standard electrolyte density		1.265÷1.275		
Fuses	Headlight	HI	15A		
		LO	15A		
	Direction indicators		15A		
	Injection relay		10A		
	Main fuse		15A		

Downloaded from www.Manualslib.com manuals search engine

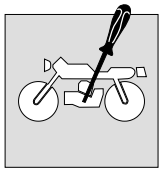

WATTAGE

Unit: W

PART		TECHNICAL CHARACTERISTICS
Headlight	HI	60
	LO	55
Sidelight		5
Stop/tail light		21/5
Direction indicators		10
Revcounter light		1.2
Direction indicator warning light		2
Main beam warning light		2
Neutral warning light		2
Fuel level warning light		2
Number plate light		5

BRAKES + WHEELS

Unit: mm

PART	STANDARD		LIMIT
Rear brake pedal travel		5	———
Brake disc thickness	Front	4.0±0.2	3.5
	Rear	5.0±0.2	4.5
Brake disc deformation (front and rear)		———	0.30
Wheel deformation (front and rear)	Axial	< 0.5	2
	Radial	< 0.8	2
Wheel spindle axial deformation	Front Rear	< 0.1	0.2

Downloaded from www.Manualslib.com manuals search engine

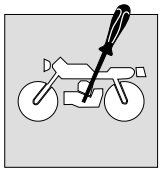

PART	STANDARD		LIMIT
Axial deformation – wheel	Front	———	0.5
	Rear	———	0.5
Wheel dimensions	Front	3.00“X18”	———
	Rear	4.25 “X17”	
Tyre dimensions	Front	110/80 -18”	———
	Rear	150/70 -17”	———
Tread depth	Front	———	2.0
	Rear	———	2.0

SUSPENSION

PART	STANDARD	LIMIT
Fork travel	150	———
Fork spring floating length	280	———
Fork oil level	180	———
Rear spring assembly installed length	180	———
Rear wheel travel	160	———
Fork shaft pin deformation	———	0.30

TYRE PRESSURES

COLD TYRE PRESSURES	RIDER ONLY		WITH PASSENGER	
	kPa	kg/cm^2	kPa	kg/cm^2
FRONT	220	2.2	240	2.4
REAR	240	2.4	260	2.6

Downloaded from www.Manualslib.com manuals search engine

FUEL + COOLANT

PART	TECHNICAL CHARACTERISTICS		NOTES
Fuel type	The fuel must be 95 octane petrol or higher. It is recommended that lead free petrol be used.		
Fuel tank capacity	20 L		
Engine oil type	AGIP TEC 4T 10W/40		SINT 20005W/40
Engine oil capacity	Oil change	3100 ml	
	Filter change	3300 ml	
	Overhaul	3600 ml	
Fork oil type		SAE 7.5	
Fork oil capacity (each leg)	680 cc		
Brake fluid type	AGIP BRAKE 4		
Coolant type	Use antifreeze coolant that is compatible with aluminium radiators. Mix with a ratio of 50/50 with distilled water only.		
Coolant capacity	2000 ml		

Downloaded from www.Manualslib.com manuals search engine

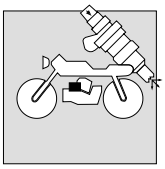

Section **C**

Downloaded from www.Manualslib.com manuals search engine

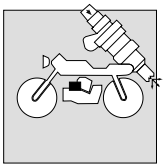

Maintenance precautions C-3
FI system technical characteristics C-9
Intake air system technical characteristics C-21
FI system - position of parts C-26
FI system diagram C-27
FI system - electrical diagram C-28
Auto-diagnostic function C-29
Security function C-32
FI system diagnostics C-33
Fuel feed system C-51
Butterfly body C-55
Intake air system C-78
Sensors C-80

Downloaded from www.Manualslib.com manuals search engine

MAINTENANCE PRECAUTIONS

Observe the following when handling components of the FI system or when carrying out maintenance on the system.

CONNECTORS/COUPLINGS

- When putting connectors together, make sure that the connectors are pushed fully home until a click is heard.
- When pulling apart a snap connector, release the stop before disconnecting. When connecting, push in until a click is heard.
- When disconnecting a coupling, make sure to grip the body of the coupling and do not pull on the leads.
- Check that the terminals of each connector/coupling are not loose or bent.
- Check for corroded or dirty terminals. A good contact will not be made if the terminals are corroded and not perfectly clean.

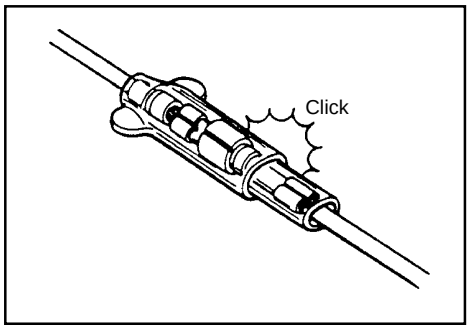

- If there are circuit problems, check each lead by hand. If there are cracks or breaks in the insulation, repair or substitute the leads.

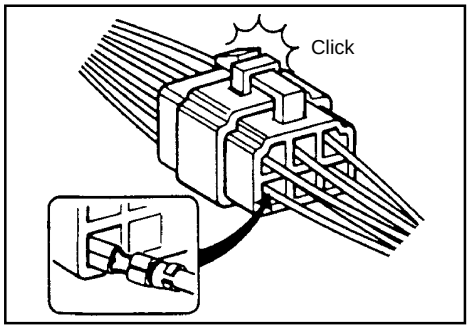

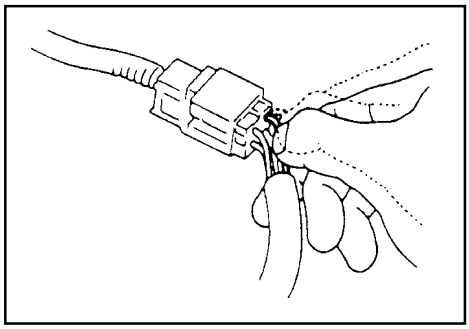

- When carrying out measurements on electrical connectors with a tester, insert the probe into the connector from the wiring system side of the connector/coupling.

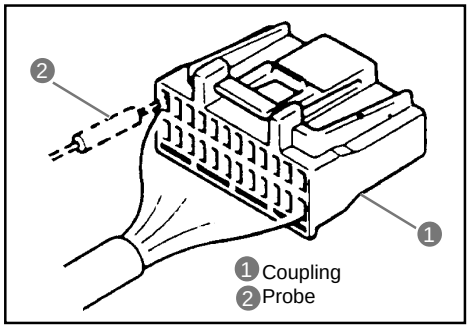

- If it is not possible to insert the probe from the wiring side, take particular care not to bend the male terminal or open the female terminal when inserting the probe on the terminal side of the coupling.
  Never insert the probe into a male terminal.
- Check terminal connections to see if the male terminals are bent or the female terminals are too open or both terminals are loose, corroded or dirty.

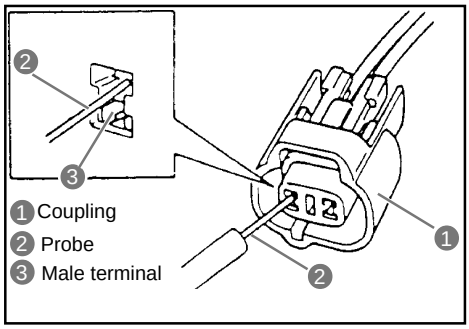

Downloaded from www.Manualslib.com manuals search engine

FUSES

- Always search for the cause of a blown fuse. Eliminate the cause and then substitute the fuse.
- Use only fuses of the correct amperage.
- Do not use wire or another substitute for a fuse.

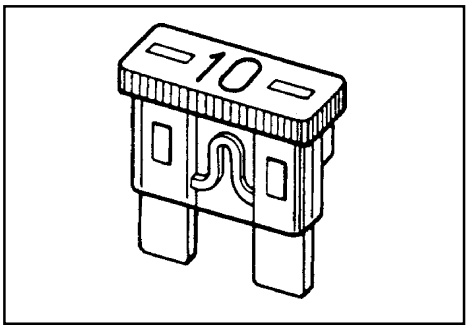

ECM/VARIOUS SENSORS

- Seeing that each component is a high precision part, take care to not damage the said components during the removal/installation phases.

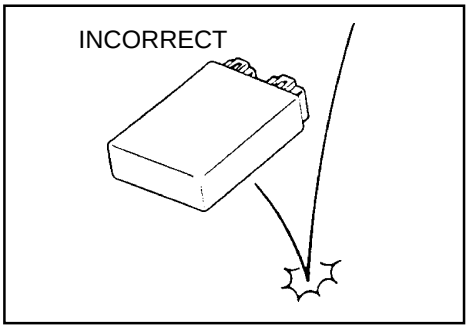

- Take care to not touch the electrical terminals of the ECM. The static electricity of the body can damage the component.

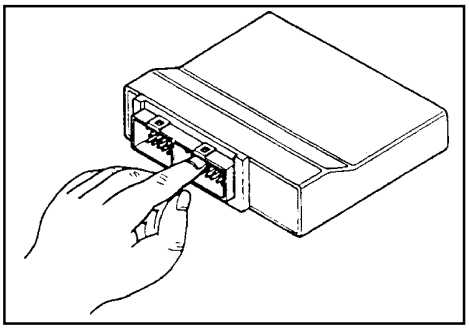

- Before connecting or disconnecting an ECM coupling, make sure that the ignition switch is in the OFF position. This will prevent damage to the electronic parts.

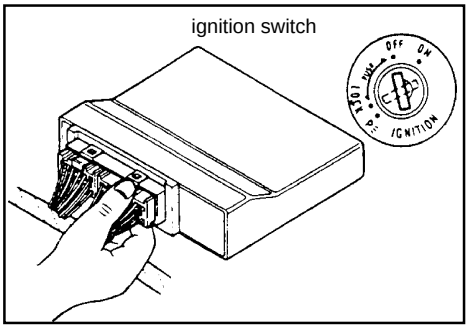

- Do not connect the battery with inverted polarities. This will instantly damage components of the FI system when the circuit is switched on.

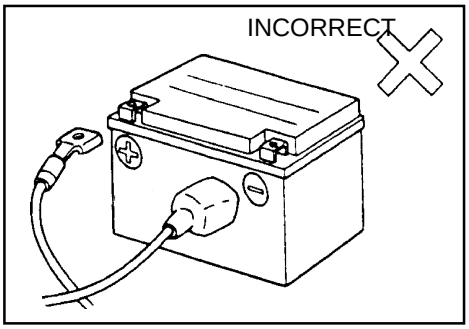

Downloaded from www.Manualslib.com manuals search engine

- Do not remove the terminals of the battery whilst the engine is running.
  If a terminal is removed, this would cause an inverted electrical force that would seriously damage the ECM.

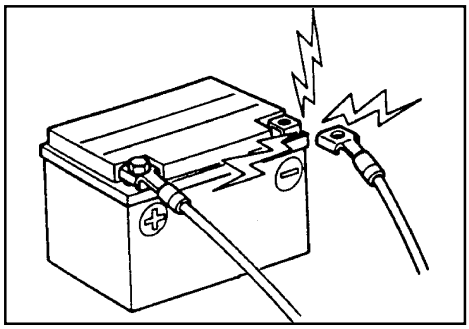

- Before measuring the voltage on any terminal of the electrical system, check that the voltage of the battery is 11V higher. Terminal checks carried out with an insufficient battery voltage can cause diagnostic errors.

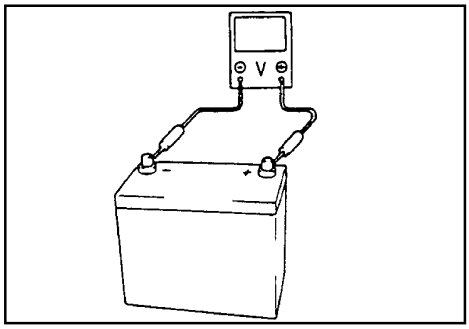

- Never connect any tester (voltmeter, ampmeter, etc.) to the ECM when its coupling is disconnected. This could cause damage.
- Never connect an ohmmeter to the ECM with the coupling connected. This could cause damage to the ECM and the sensors.
- Use a good quality ohm-meter/voltmeter. It will not be possible to obtain precise test results or possible personal injuries could result if bad quality equipment is used.

ELECTRICAL CIRCUIT TESTING PROCEDURE

There are various methods of testing electrical circuits. The one described here is the general method for testing open circuits or short circuits using an ohmmeter and a voltmeter.

OPEN CIRCUIT TESTS

The probable causes of open circuits are described as follows. Check the connectors/couplings and terminals with particular attention because these are frequently the cause of an open circuit.

- Loose connection of a connector/coupling.
- Poor contact of the terminal (because of dirt, corrosion, rust or foreign objects, etc.).
- Leads not insulated properly.
- Poor connection between the lead and the terminal.

Downloaded from www.Manualslib.com manuals search engine

- Disconnect the negative polarity cable from the battery.
- Check to see if the connectors/couplings and both ends of the circuit are not loose. Also check the snap-fit couplings for correct insertion.

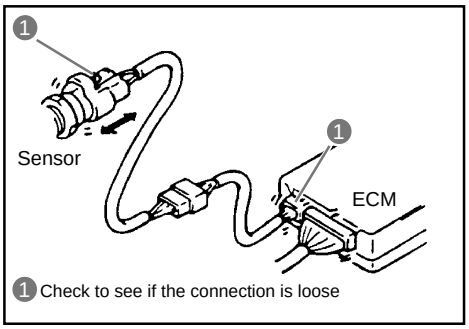

- Check the tightness of the female terminals of the circuit by using a test male terminal.
  Visually check each terminal for poor contacts (caused by dirt, corrosion, rust, foreign bodies, etc.). Check that each terminal is correctly inserted into the couplings.
  If the terminal is loose, adjust it to increase the tightness or substitute the terminal. They must be clean and free of corrosion that could impede a good contact.
- Using the continuity and voltage testing procedure described as follows, check for an open circuit or a poor contact of the wiring terminals. Locate the defect and repair..

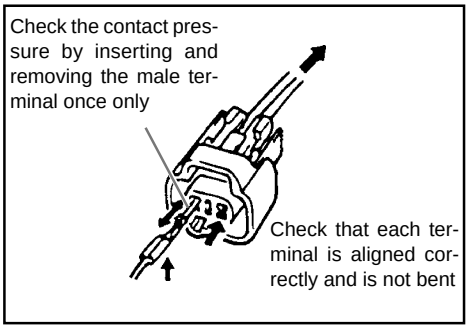

Continuity test

- Measure the resistance between the terminals of the coupling and both ends of the circuit being tested (as indicated between position **A** and **C**).
  If no continuity is indicated (complete resistance or over the limit of the scale), signifies that the circuit between terminals **A** and **C** is open.

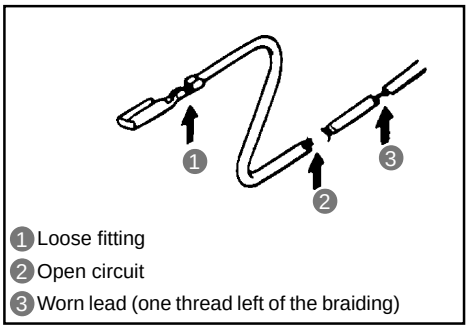

- Disconnect the coupling in the circuit (coupling **B** in the figure) and measure the resistance between the terminals **A** and **B**.
  If there is no continuity signifies that the circuit between the terminals **A** and **B** is open. If continuity is indicated, the circuit is open between the terminals **B** and **C** or the coupling **B** is defective.

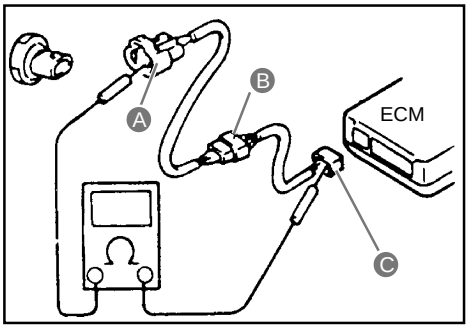

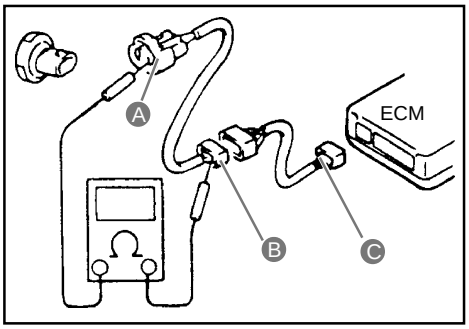

Downloaded from www.Manualslib.com manuals search engine

Voltage test

If the circuit tested has fewer volts than normal, the voltage test can also be used as a continuity test.

- With all connectors/couplings connected and with voltage running through the circuit being tested, measure the voltage between each terminal and Earth.

If the measuring is carried out as indicated in the figure on the right and the results are as indicated below, signifies that the circuit is open between terminals **A** and **B**.

Voltage between:
C and Earth: approx. 5 V
B and Earth: approx. 5 V
A and Earth: 0 V

However, if the values are those indicated below signifies that there is an anomalous resistance of a level corresponding to the drop in voltage in the circuit between the terminals **A** and **B**.

Voltage between:
C and Earth: approx. 5 V
B and Earth: approx. 5 V — Drop of 2 V
A and Earth: approx. 3 V

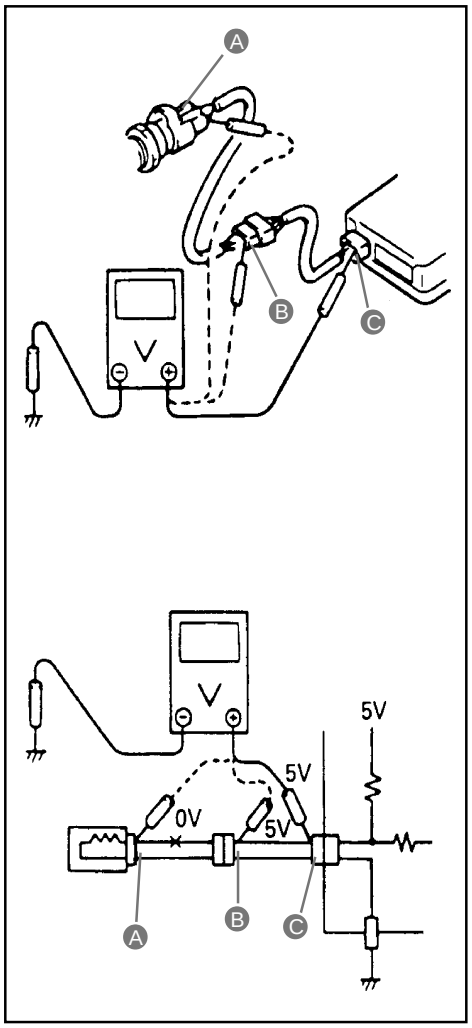

SHORT CIRCUIT TESTS (wiring - Earth)

- Disconnect the negative polarity cable of the battery.
- Disconnect the connectors/couplings and both ends of the circuit being tested.

Disconnect all connectors/couplings between the circuit being tested and any other circuits.
The diagnosis will not be accurate if this is not done.

- Measure the resistance between the terminal and one end of the circuit (terminal **A** in the figure) and Earth. If continuity is indicated signifies that there is a short circuit to Earth between the terminals **A** and **C** of the circuit.

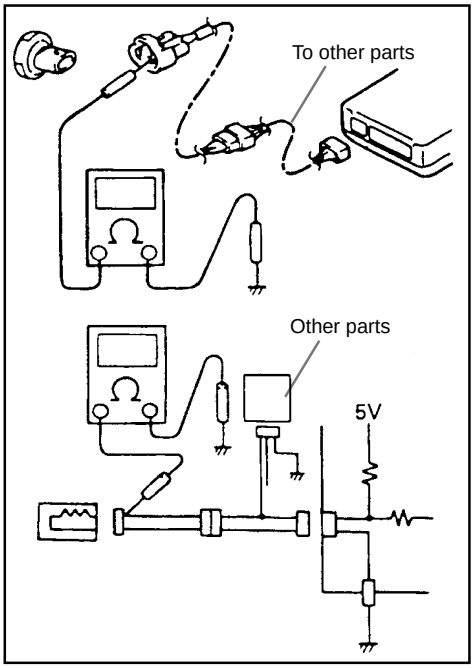

Downloaded from www.Manualslib.com manuals search engine

- Disconnect the coupling in the circuit (coupling **B**) and measure the resistance between the terminals **A** and Earth.
  If continuity is indicated signifies that there is a short circuit to Earth between the terminals **A** and **B** of the circuit.

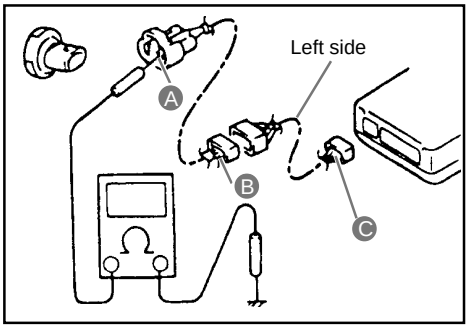

USE OF THE TESTER

- Use batteries for the tester that are in good condition.
- Ensure that the tester is correctly adjusted to the range of tests to be conducted.
- As the resistance can vary according to the tester being used and the temperature, the tester must be used as follows.

Use of the tester

- An incorrect connection of the + and - probes can cause damage inside the tester.
- If the voltage and the current are not known, carry out the test utilising the highest range possible.
- Start with the tester at 0 ohms before testing each resistance or after having changed the range of the resistance.
- When the resistance is measured with a multi-tester, also measure the resistance the charge is missing. Subtract this resistance from that measured under charge to obtain the effective resistance.

(Resistance measured) - (Resistance in absence of charge) =(effective resistance)

- When resistance is measured with a multi-tester, “infinite” becomes 10.00 Mohm and “1” flashes on the display.
- Check that no voltage has been applied before carrying out testing. If voltage is present, the tester could be damaged.
- Switch off the tester when not in use.

** When connecting the multi-tester, place copper adaptors (external diameter: - 0.5 mm) on the rear part of the coupling and then connect the probes to the adaptors.*

** Use copper adaptors as described above, to prevent damage to the protective rubber sleeves of the impermeable couplings.*

Downloaded from www.Manualslib.com manuals search engine

FI SYSTEM TECHNICAL CHARACTERISTICS

INJECTION TIME (INJECTION VOLUME)

The factor that determines the timing of the injection is the time of the basic injection. This is calculated on the basis of intake air pressure, the rpm of the engine, the opening of the throttle and various other adjustments that are determined according to signals received from various sensors that reveal the engine and riding conditions.

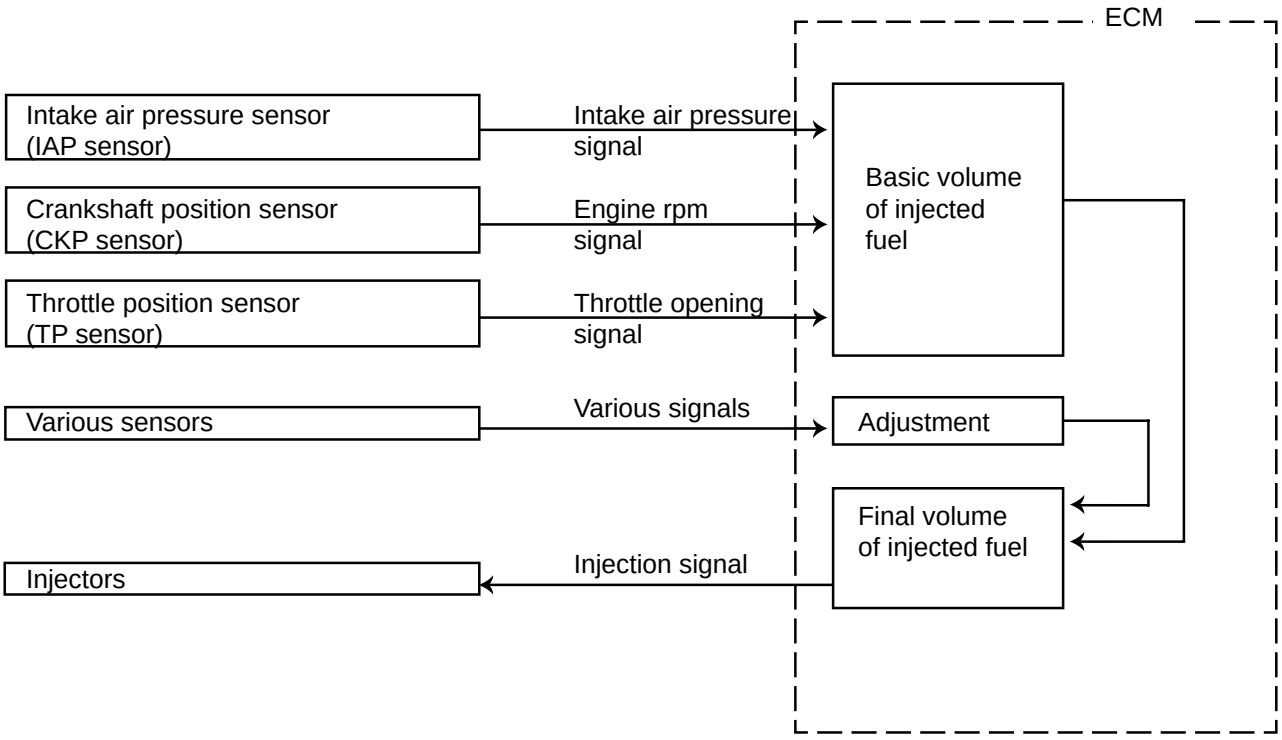

Downloaded from www.Manualslib.com manuals search engine

INJECTION TIME ADJUSTMENT (VOLUME)

Various sensors allow injection time adjustments (volume) to be carried out on the basis of the following signals.

SIGNAL	DESCRIPTION
ATMOSPHERIC PRESSURE SENSOR SIGNAL	When the atmospheric pressure is low, the sensor sends a signal to the ECM to reduce the injection time (volume).
ENGINE COOLANT TEMPERATURE SENSOR SIGNAL	When the temperature of the engine coolant is low, the injection time (volume) is increased.
INTAKE AIR TEMPERATURE SENSOR SIGNAL	When the temperature of the intake air is low, the injection time (volume) is increased.
BATTERY VOLTAGE SIGNAL	Battery voltage is supplied to the ECM to make it function. This voltage is taken and used as a signal for the adjustment of the injection time (volume). A low voltage determines a longer injection time for the injection volume adjustment.
GEARCHANGE/ENGINE RPM POSITION SIGNAL	At high engine rpm, the injection time (volume) is increased in the 5th and 6th gears. The SRAD system makes this adjustment.
IGNITION SIGNAL	When the engine is being switched on, a larger volume of fuel is injected into the system.
ACCELERATION/DECELERATION SIGNAL	During acceleration, the injection time of the fuel (volume) is increased in relation to the speed with which the throttle is opened and the rpm of the engine. During deceleration, the injection of fuel is interrupted. Injection is reactivated when the butterfly valve is reopened.

INJECTION KILL CONTROL

SIGNAL	DESCRIPTION
CRASH SENSOR SIGNAL	If the motorcycle crashes to the ground, the crash sensor sends a signal to ECM. At the same time, this signal causes an interruption of the electrical feed to the fuel pump, the injectors and the ignition coil.
RPM LIMITER SIGNAL	The functioning of the fuel injectors is interrupted when the rpm of the engine reaches maximum level. The rpm limiter interrupts the ignition system and therefore the interruption signal is sent to the ECM.

Downloaded from www.Manualslib.com manuals search engine

FUEL FEED SYSTEM

The fuel feed system consists of the fuel tank, fuel pump, fuel filter, feed tube, feed tubing (including the fuel injectors), pressure regulator and the return feed tube. The fuel is pumped from the tank to the fuel pump and the pressurised fuel flows into the injector installed in the fuel feed tubing. As the fuel pressure applied at the fuel injector (the pressure of the fuel in the feed tubing) is always maintained at a higher value than the suction of the carburettor, the fuel is injected into the carburettor in a conical dispersion when the injector opens according to the injection signal received from the ECM.
The excess fuel refused by the pressure regulator returns to the fuel tank via the return fuel tube.

ELECTRIC FUEL PUMP

The electric fuel pump, which is situated on the left hand side of the machine, is of the rotating lobe volumetric type.
The pump motor has permanent magneto brushes.
The pump has a non-return valve to avoid the emptying of the fuel system when the pump is not in function.
It is also provided with a pressure valve that short circuits the air feed when there is a pressure more than 5 bar. This avoids overheating the electric motor.
The ECM controls the ON/OFF condition of the fuel pump as described in the FUEL PUMP CONTROL SYSTEM section.

Downloaded from www.Manualslib.com manuals search engine

FUEL PRESSURE REGULATOR

The fuel pressure regulator is a diaphragm release valve that consists of a diaphragm, spring and a valve. It always maintains the pressure of the fuel to the injector at 2.9 kg/cm^2 (290 kPa) higher than the pressure in the carburettor. When the fuel pressure rises more than 2.9 kg/cm^2 (290 kPa) above the pressure in the carburettor, the fuel opens the regulator valve and therefore the excess fuel returns to the fuel tank via the return fuel tube.

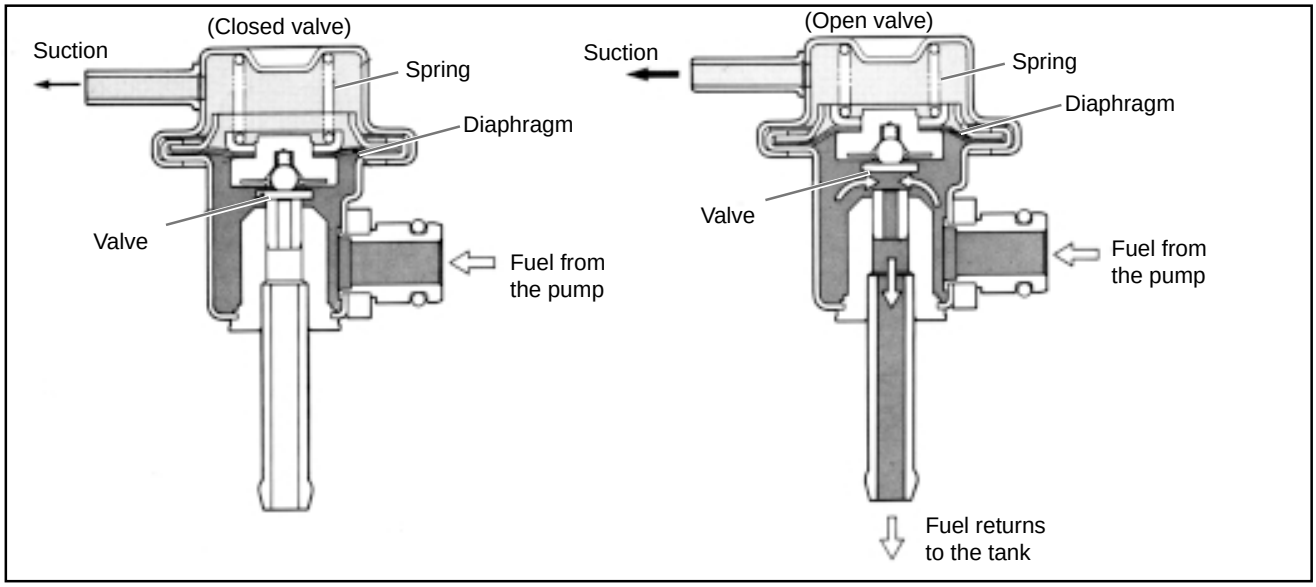

FUEL INJECTOR

The fuel injector consists of a solenoid, piston, needle valve and filter.
The injector is an electro-magnetic injection jet that injects the fuel into the carburettor according to the signals received from the ECM.
When the ECM agitates the solenoid, it becomes an electro-magnet that attracts the piston. At the same time, the needle valve incorporated in the piston opens and the injector, under pressure from the fuel, injects the fuel in a conical dispersion. As the opening movement of the needle valve is constant, the volume of fuel injected each time is determined by the agitation period of the solenoid (injection time).

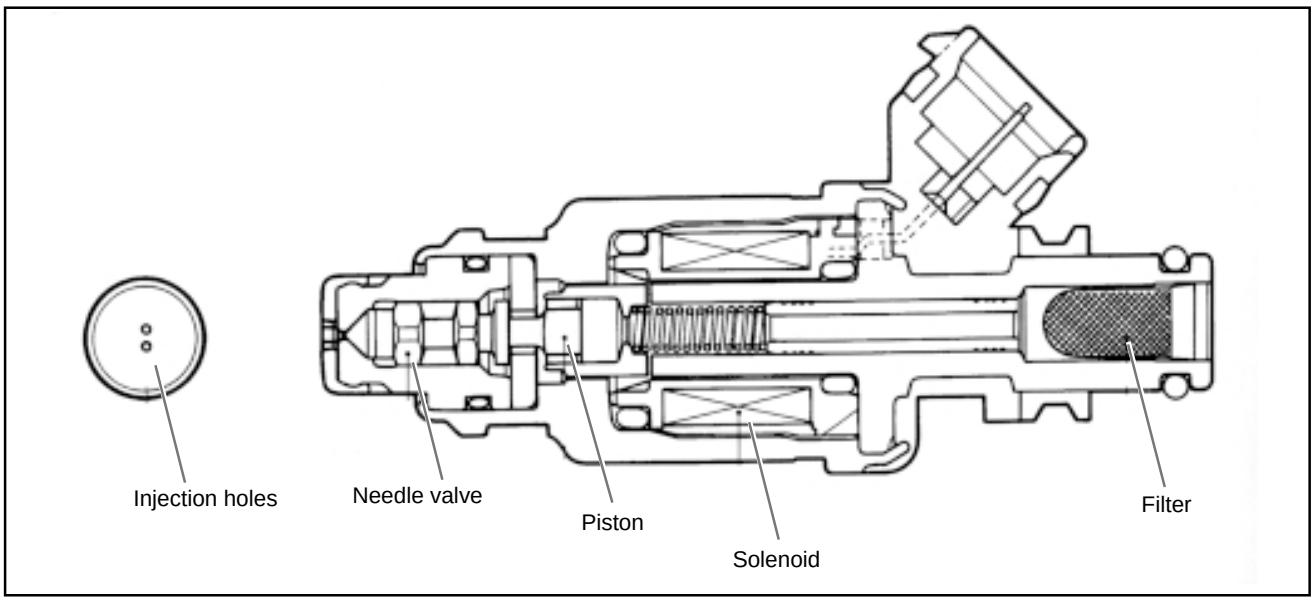

Downloaded from www.Manualslib.com manuals search engine

FUEL PUMP CONTROL SYSTEM

When the ignition switch is switched to ON, the battery current reaches the fuel pump motor via the relay of the side stand and the also pump relay, that turns the motor.

As the ECM possesses a timing function, the pump motor stops turning three seconds after the ignition switch is switched ON.

Continuing, when the crankshaft is made to turn by the starter motor or by the engine already switched on, the engine rotation signal is sent to the ECM. Therefore, the current flows to the fuel pump motor via the side stand relay and the same pump relay, thereby making the pump work on a continuous basis.

In the control circuit of the fuel pump there is a crash sensor. If the machine should be dropped, the crash sensor sends a signal to the ECM to deactivate the feed to the pump relay, thereby interrupting the function of the fuel pump motor. At the same time, the current to the injectors and ignition coils is interrupted, causing the engine to switch off.

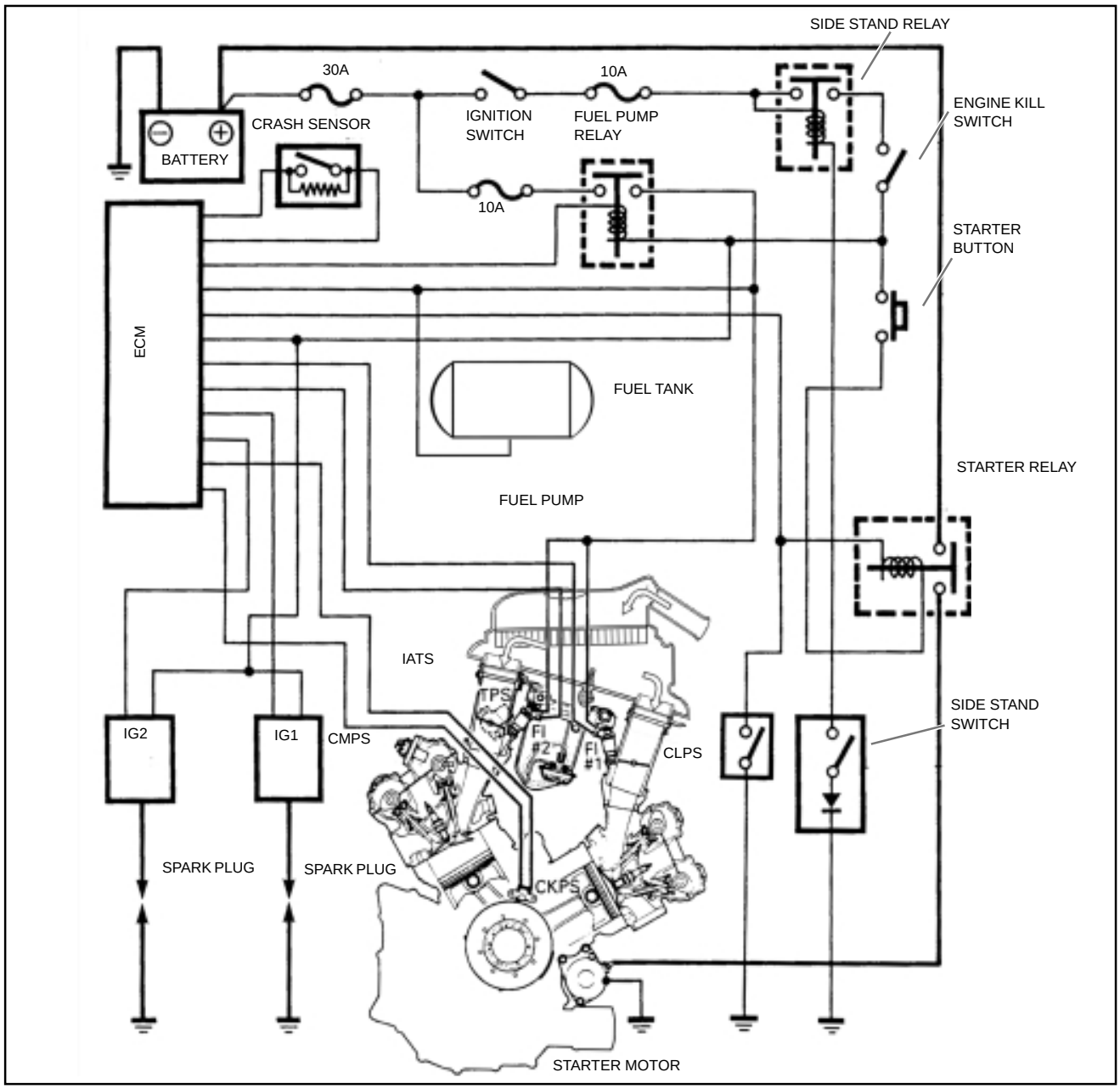

Downloaded from www.Manualslib.com manuals search engine

ECM (FI CONTROL UNIT)

The ECM unit is situated underneath the seat and the seat compartment towards the rear of the machine.
The ECM consists of a CPU (Central Control Unit), a memory (ROM) and incoming/outgoing sections (I/O).
Signals sent by each sensor are received at the incoming section and then to the CPU. On the basis of the signals received, the CPU calculates the volume of fuel necessary to start the engine utilising memorised actions prepared for various engine conditions. The signal for the injection of the fuel is then sent to the injector by the outgoing section.

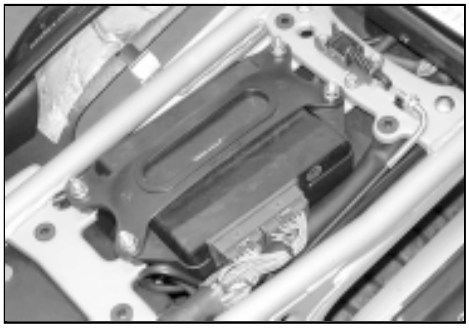

The four types of independent programmed action have been memorised in the ROM.
They have been designed to compensate for differences in the intake air/exhaust systems and the performance of cooling caused by the different leaning angles of the front cylinder and the rear cylinder.

LIGHT LOAD: When the engine turns under a light load, the volume of fuel injected (time) is based on the air pressure at the intake air and on the rpm of the engine.

HEAVY LOAD: When the engine turns under a heavy load, the volume of fuel injected (time) is based on the opening of the throttle and the rpm of the engine.

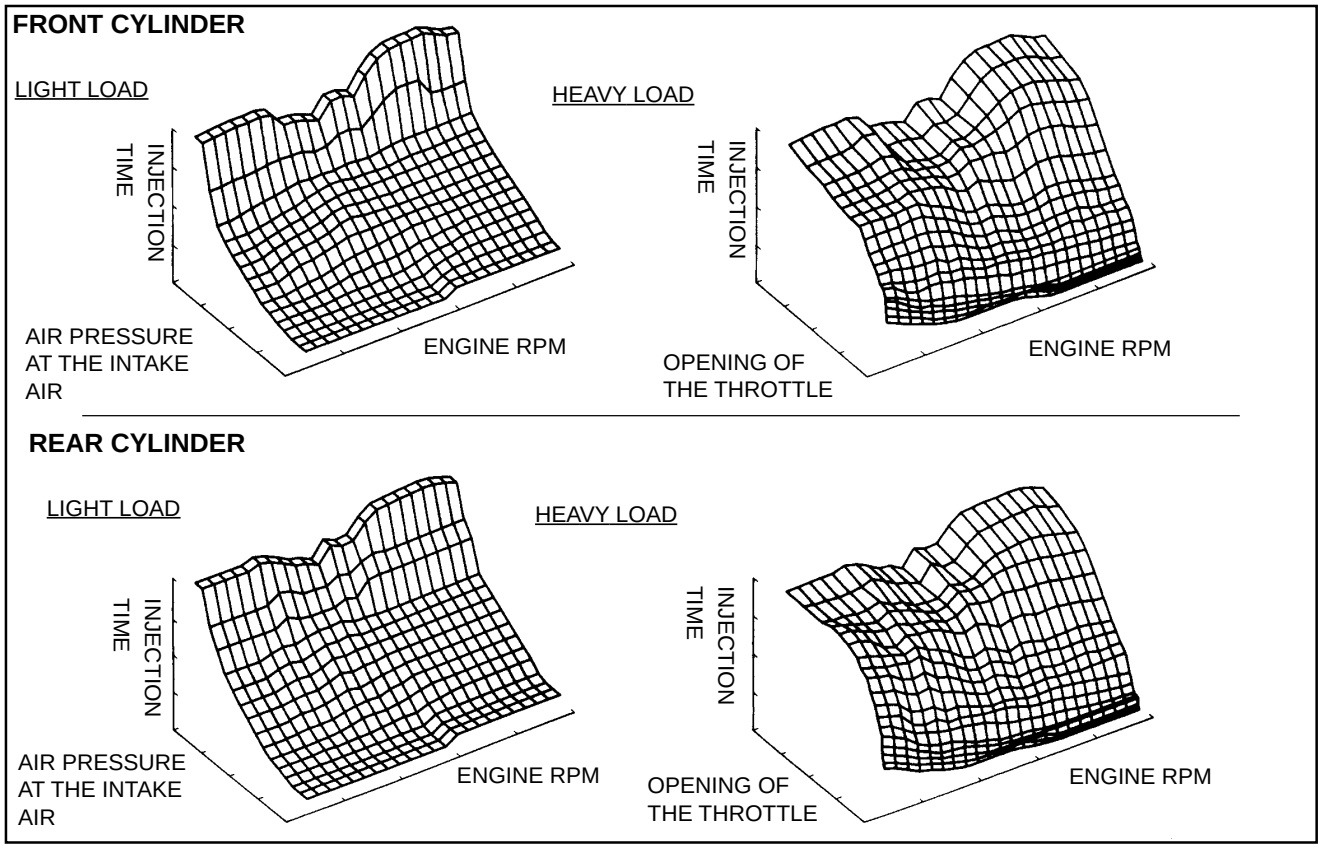

Downloaded from www.Manualslib.com manuals search engine

INJECTION SYNCHRONISATION

Fuel injection is effected by a sequential injection type system that is independent for each cylinder. The system uses the crankshaft position sensor (signal generator) to determine the position of the pistons (injection synchronisation and timing synchronisation). The camshaft position sensor identifies the cylinder when the engine is switched on, sending this information to the ECM. This permits an optimum injection volume of fuel at the right moment according to the operating conditions of the engine. When the crankshaft starts to turn at the moment of ignition, the ECM sends a signal to both front and rear injectors for the contemporaneous injection of fuel. At the second revolution of the engine, the injection of fuel is sequential and independent for both cylinders.

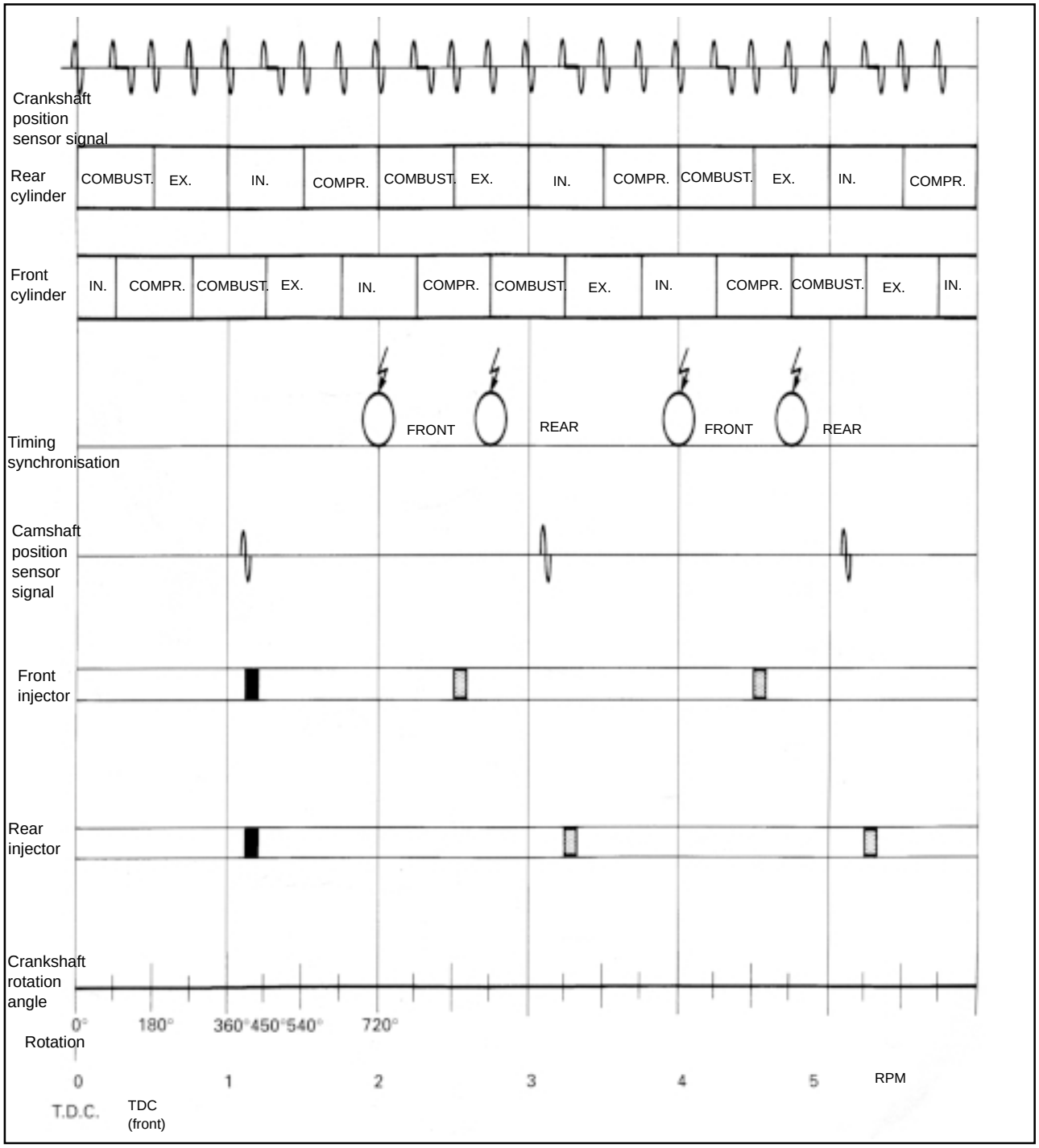

Downloaded from www.Manualslib.com manuals search engine

SENSORS

INTAKE AIR SUCTION SENSOR (IAP SENSOR)

The intake air pressure sensor is situated on the right hand side of the air filter compartment.
The sensor senses the suction of air in the intake air tube (spring type) of the butterfly body and this pressure is converted into voltage and sent to the ECM.
The basic time of injection of the fuel (volume) is determined according to the signal voltage (outgoing voltage).
The voltage increases when the air pressure of the intake air is high.

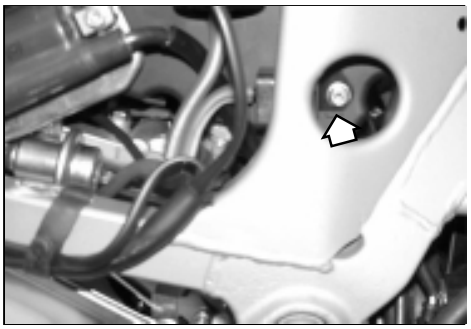

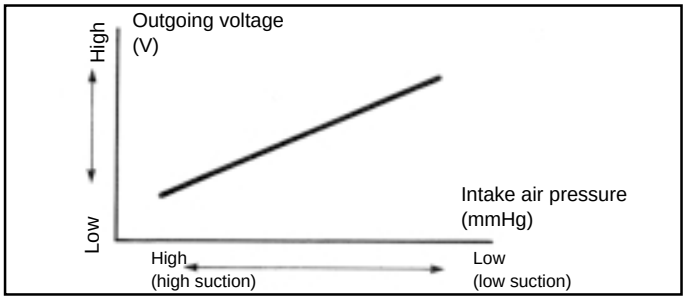

THROTTLE POSITION SENSOR (TP SENSOR)

The throttle position sensor is situated on the N° 2 carburettor. To get access to this component, it is necessary to remove the left hand fuel tank as described in Chapter B.
This sensor is a variable resistance sensor and senses the angle of opening of the throttle. In the sensor, the battery voltage is changed to the relative voltage of the position of the throttle and is then sent to the ECM. The basic time of injection of the fuel (volume) is determined according to the signal voltage (outgoing voltage).
The voltage increases when the throttle is increasingly opened.

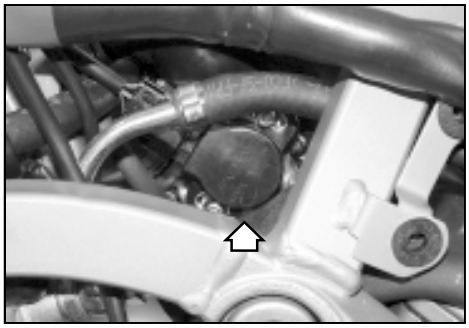

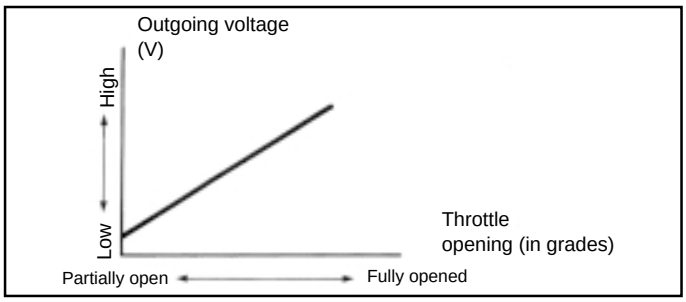

Downloaded from www.Manualslib.com manuals search engine

CRANKSHAFT POSITION SENSOR (CKP SENSOR)

The signal generating rotor is mounted on the extreme left of the engine crankshaft and the crankshaft position sensor (explorer coil) is situated inside the generator cover.
The sensor generates the signal that is transmitted to the ECM.
The ECM calculates and determines the injection synchronisation of the fuel and the timing synchronisation.
The volume of fuel injected increases when the engine rpm increases.
The signal is related to the functioning of the fuel pump.

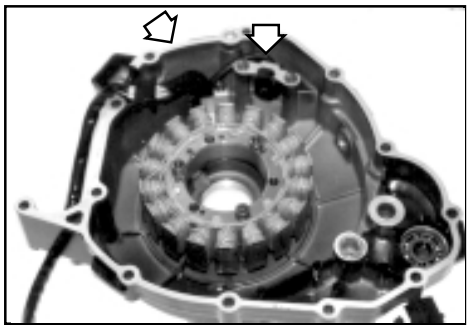

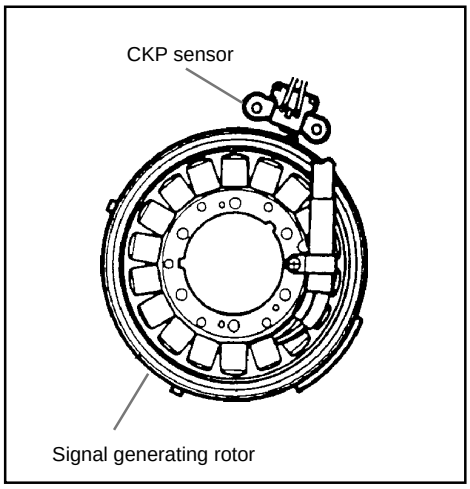

CAMSHAFT POSITION SENSOR (CMP SENSOR)

The signal generating rotor is mounted on the N° 2 intake valve camshaft and the camshaft position sensor (explorer coil) is situated on the cylinder head cover of the N° 2 cylinder.
The sensor generates the signal that is transmitted to the ECM.
The ECM calculates and determines the identity of the cylinder and the synchronisation of the sequential injection.

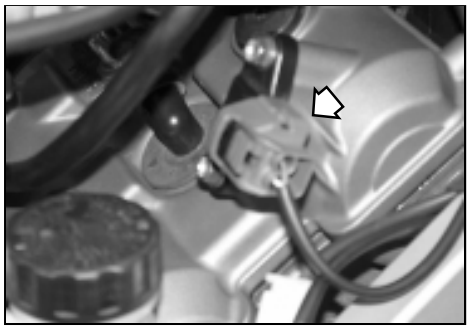

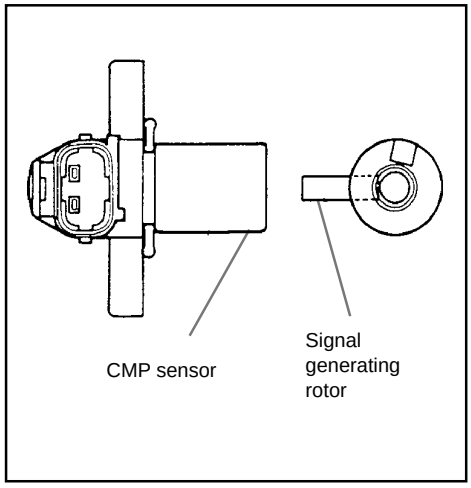

Downloaded from www.Manualslib.com manuals search engine

INTAKE AIR TEMPERATURE SENSOR (IAT SENSOR)

The sensor of the intake air temperature is situated on the front part of the air filter compartment.
The sensor reads the intake air temperature that is obtained and the sensor then converts the resistance of the Thermistor into voltage, which is transmitted to the ECM. The volume of the injection increases when the intake air temperature is low.

The resistance of the Thermistor increases when the intake air temperature is low and diminishes when the temperature is high.

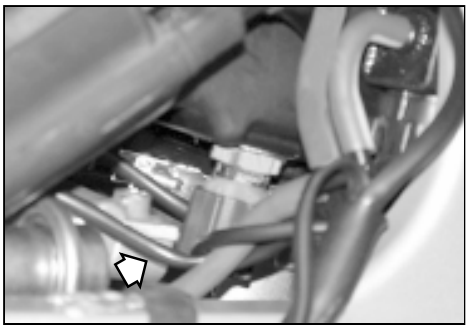

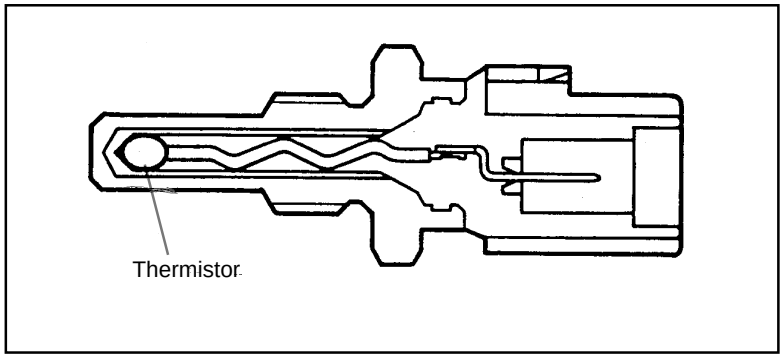

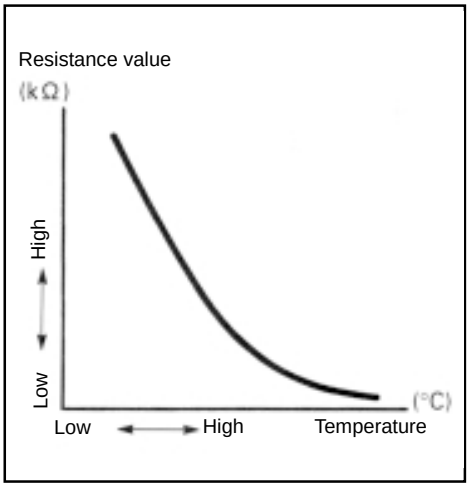

ENGINE COOLANT TEMPERATURE SENSOR (ECT SENSOR)

The engine coolant temperature sensor is installed on the body of the thermostat assembly.
The sensor senses the engine coolant temperature that is obtained and the sensor then converts the resistance of the Thermistor into voltage, which is transmitted to the ECM. The volume of the injection increases when the temperature of the coolant is low.

The resistance of the Thermistor increases when the temperature of the coolant is low and diminishes when the temperature is high.

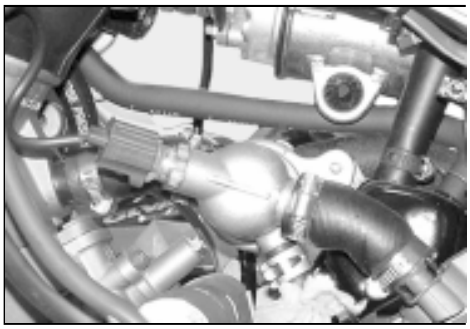

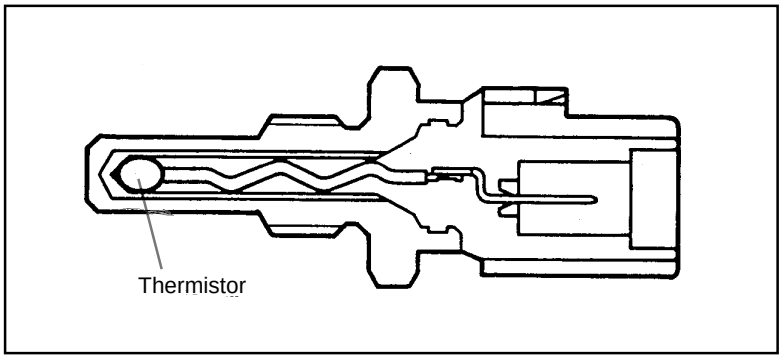

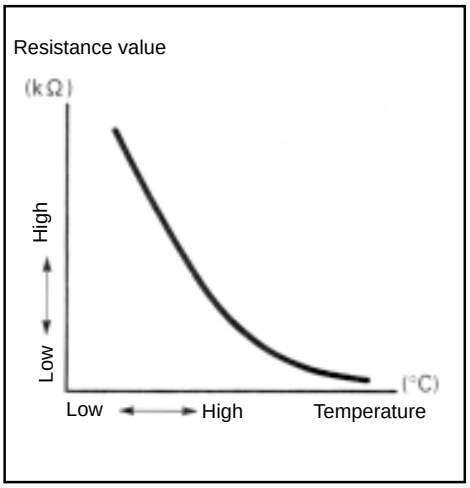

Downloaded from www.Manualslib.com manuals search engine

ATMOSPHERIC PRESSURE SENSOR (AP SENSOR)

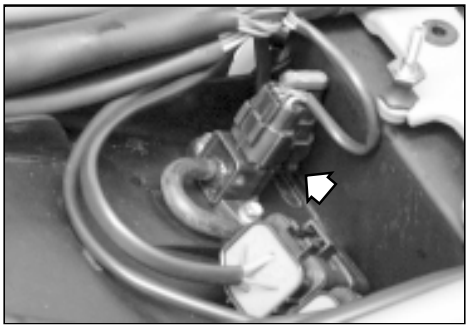

The sensor of the atmospheric pressure is situated underneath the ECM support. Remove the tool kit compartment as described in Chapter B.
Remove the ECM central processing unit and its support by unscrewing the four screws shown in the figure.

Do not disconnect the CPU when the ignition is switched on.

The sensor senses the atmospheric pressure, which is then converted into voltage and transmitted to the ECM.

The fuel injection time (volume) is determined according to the voltage of the signal (outgoing voltage).

The voltage increases when the atmospheric pressure is high.

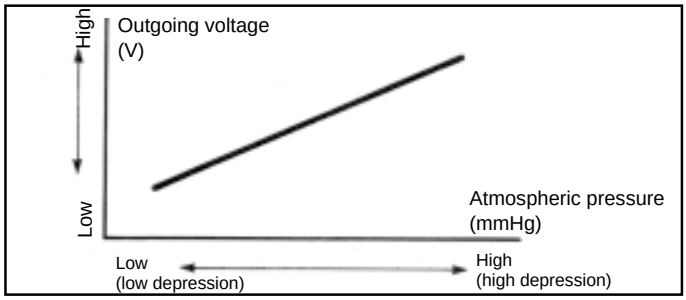

CRASH SENSOR (TO SENSOR)

The crash sensor is situated underneath the rear cover.

- To gain access to this component it is necessary to remove the left hand cover and right hand cover by unscrewing the two relative screws **1**.

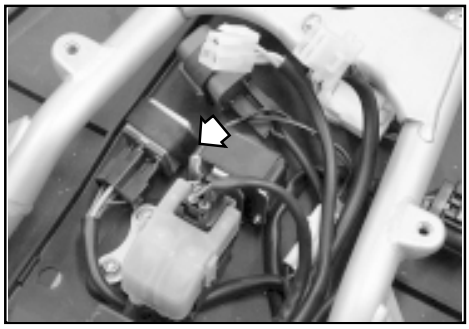

- Remove the parcel carrier by unscrewing the three screws **2**. Disconnect the regulator connection.

The sensor senses the leaning angle of the machine. When the machine is inclined more than 43°, the mechanical switch closes (ON) and a signal is transmitted to the ECM. At the same time, the signal interrupts the electrical flow to the fuel pump, the injectors and the ignition coils.

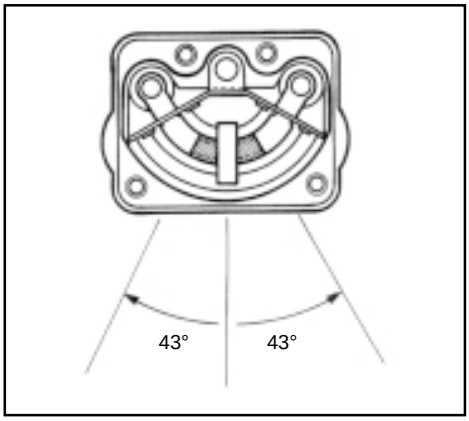

If it becomes necessary to remove the crash sensor, check that it is reassembled in the correct way (see photograph). The cable of the sensor must remain on the right hand side of the rubber support (seen from behind).

Downloaded from www.Manualslib.com manuals search engine

INTAKE AIR SYSTEM TECHNICAL CHARACTERISTICS

Whilst the machine is in motion, the frontal air pressure flows into the air filter compartment in such a way that it pressurises the intake air. This improves the intake air efficiency that subsequently permits a greater power output of the engine.

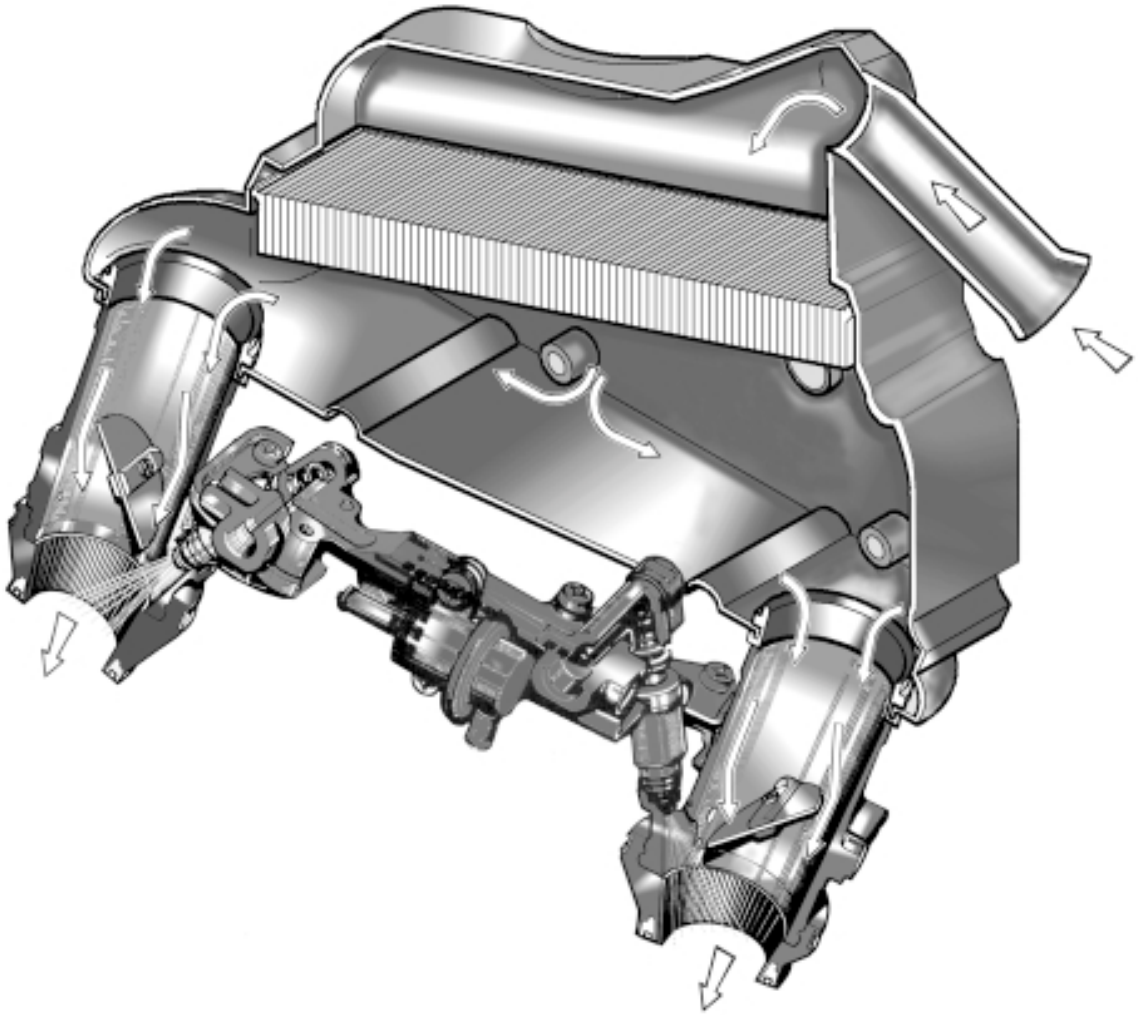

Downloaded from www.Manualslib.com manuals search engine

POSITION OF THE FI SYSTEM COMPONENTS

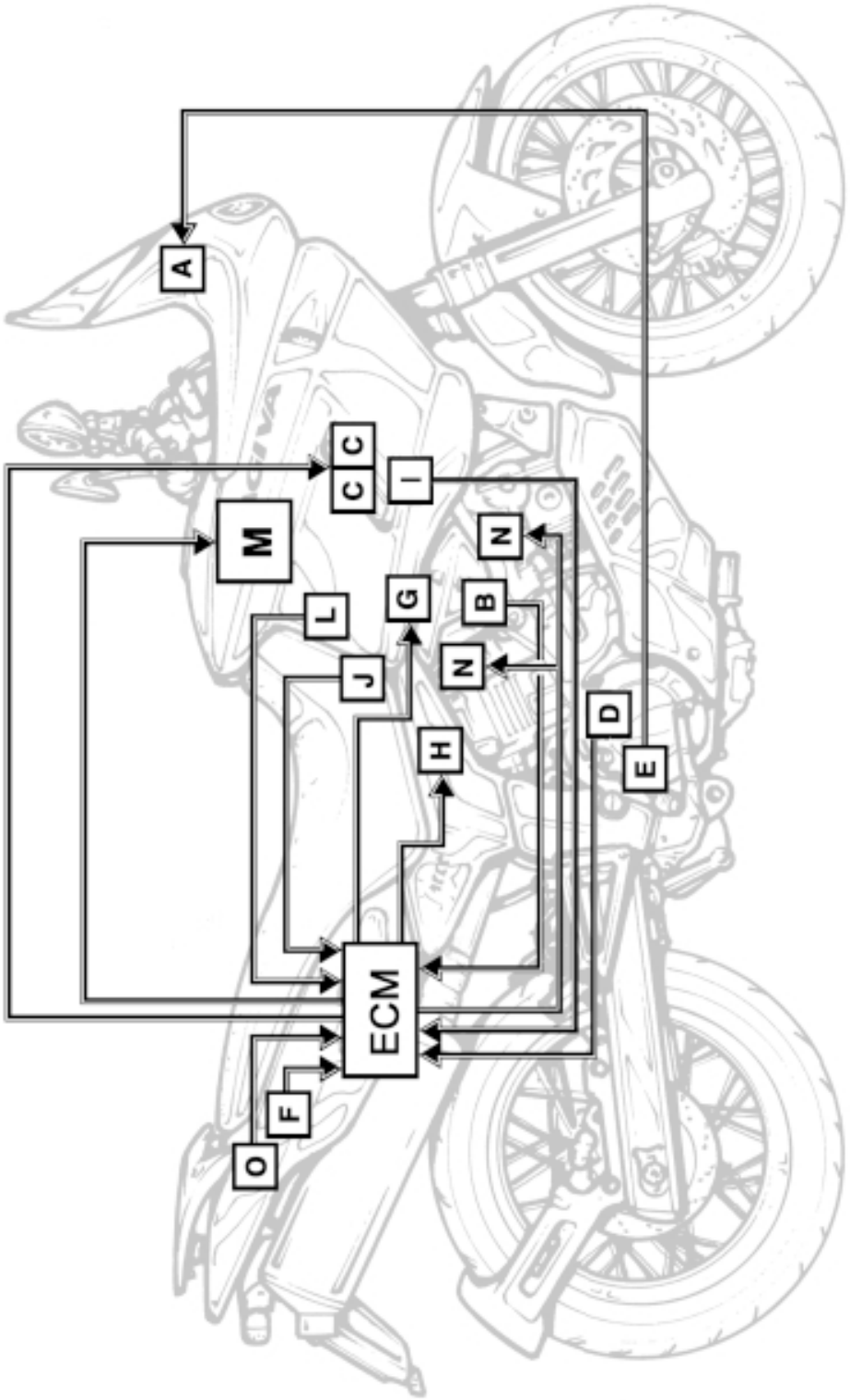

A Speedometer
B Engine coolant temperature sensor (ECTS)
C Ignition coils (IG COILS)
D Crankshaft position sensor (CKPS)
E Rpm sensor

F Atmospheric pressure sensor (APS)
G Fuel pump (FP)
H Camshaft position sensor (CMPS)
I Intake air pressure sensor (IAPS)
J Throttle position sensor (TPS)

L Intake air temperature
M Air filter
N Fuel injectors (FI)
O Fuel pump relay (RELE FP)

Downloaded from www.Manualslib.com manuals search engine

FI SYSTEM DIAGRAM

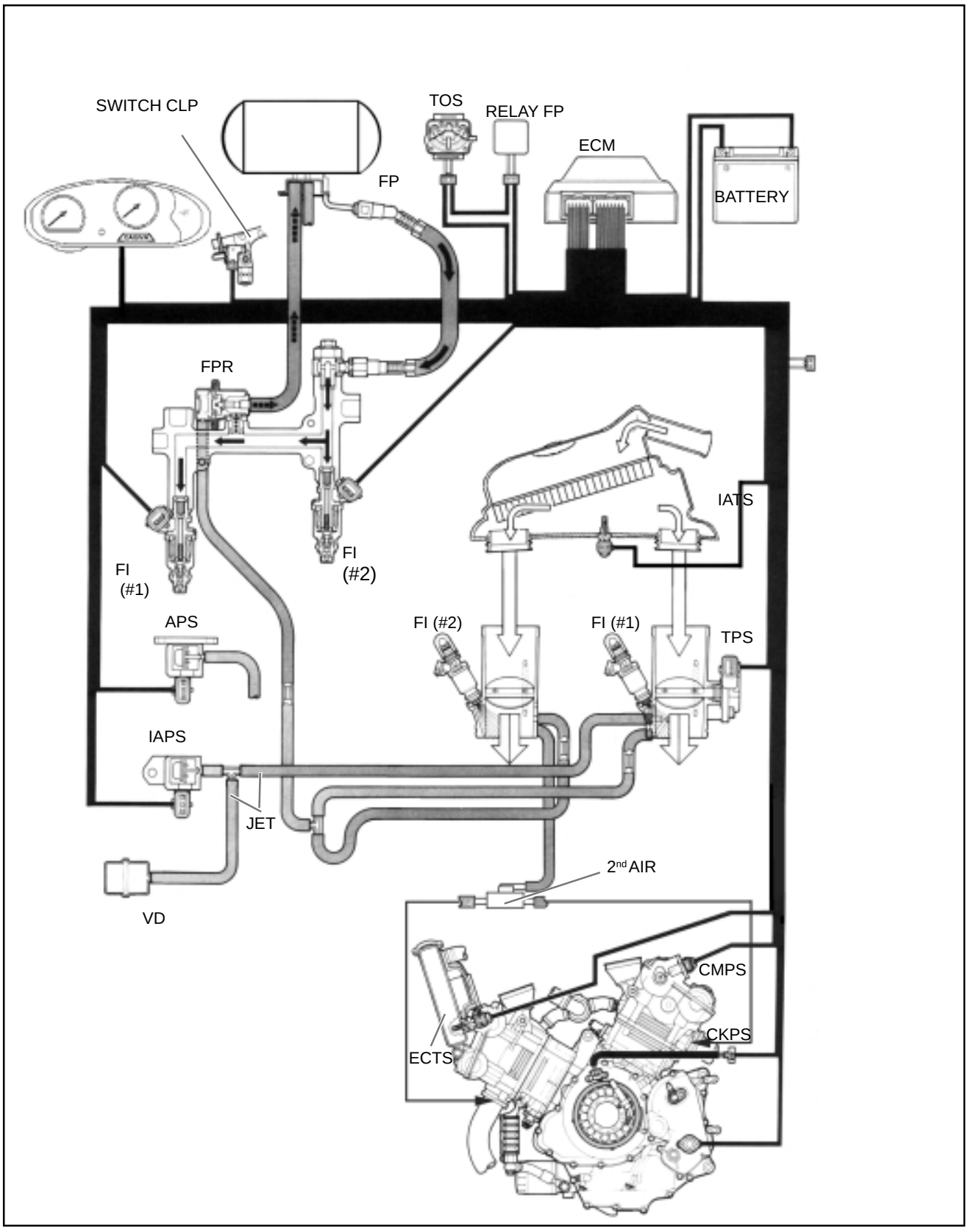

Downloaded from www.Manualslib.com manuals search engine

FI ELECTRICAL SYSTEM DIAGRAM

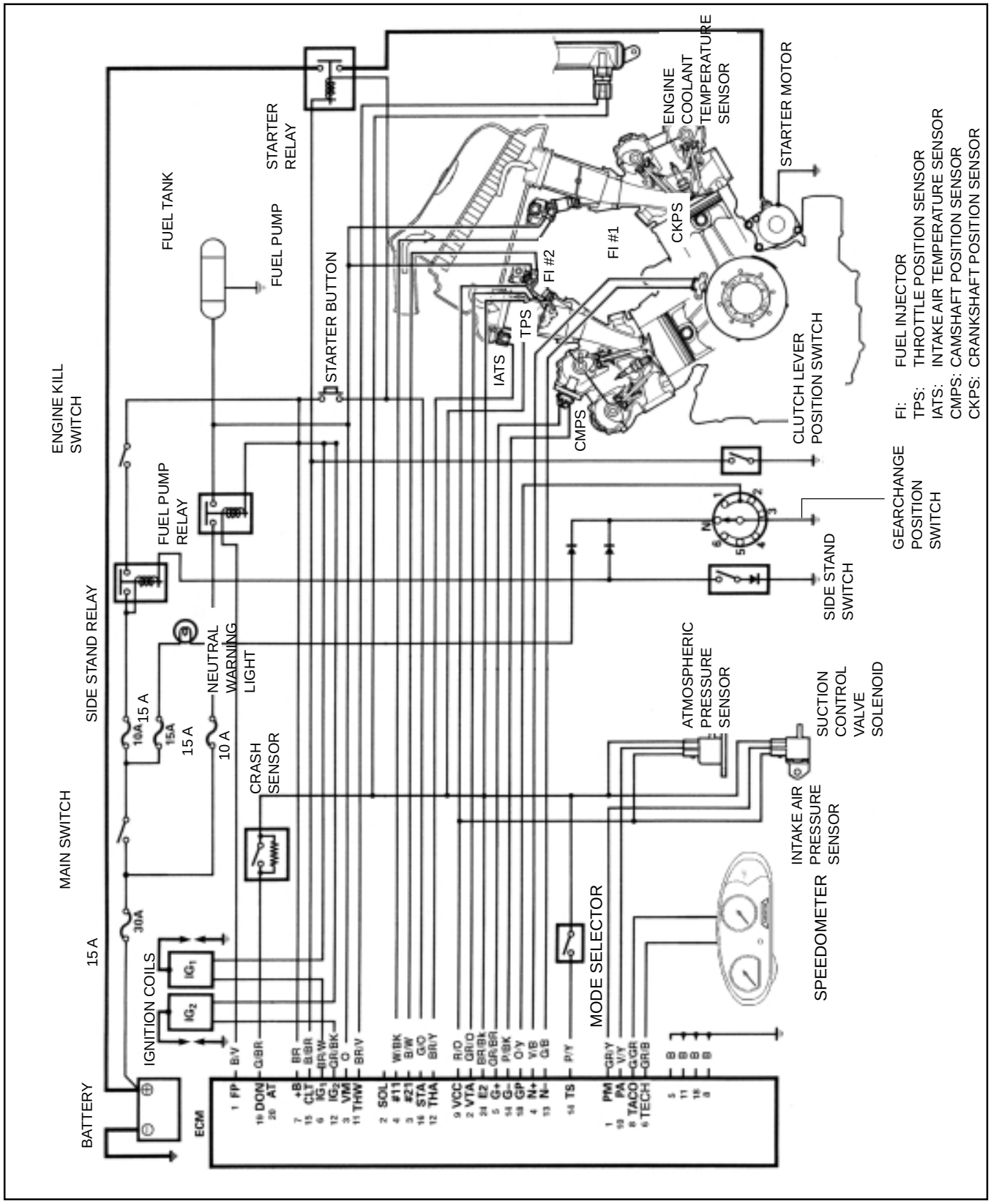

Downloaded from www.Manualslib.com manuals search engine

AUTO-DIAGNOSTIC FUNCTION

An auto-diagnostic function is incorporated in the ECM. This function has two modes: the user mode and the dealer mode. The user can only utilise the LCD display and the LED indicator. To check the functions of the FI system devices, it is necessary to prepare the dealer mode and utilise the special tool for the reading of the malfunction codes.

USER MODE

MALFUNCTION	LCD (DISPLAY) INDICATION	LED INDICATION	INDICATION MODE
NO	Engine coolant temperature	Engine coolant temperature/oil pressure	———
YES The engine turns over	Engine coolant temperature and the letters “FI” *1	The LED lights up	“FI” or temperature is indicated every second.
The engine does not turn over	Engine coolant temperature and the letters “FI” *2	The LED lights up	“FI” or temperature is indicated every second.
	Letters “FI” *3	The LED lights up and flashes	The letters “FI” are indicated continuously

*1
When the ECM does not receive one of the sensor signals, the security system becomes operative and the injection is not interrupted. In this situation, the LCD display panel indicates “FI” and the engine coolant temperature and the machine continue to function.

*2
When the ECM does not receive the sensor signals of the camshaft position or the crankshaft position, the injection signal is interrupted. The LCD display panel indicates “FI” and the engine coolant temperature. The machine stops functioning.

*3
When the crash signal, the ignition signals #1 and #2, the injector signals #1 and #2, the fuel pump relay signal or the ignition switch signal do not reach the ECM, the injection is interrupted. The LCD display panel indicates “FI” when the starter button is pushed. The machine stops functioning.

“CHEC”: The panel indicates “CHEC” when no signals are received from the ECM for five seconds.
For example:
The ignition switch is in the ON position and the engine kill button is OFF. The LCD display panel does not receive any message from the ECM and indicates instead “CHEC”. If “CHEC” is visualised, the problem cannot be visualised on the LCD display panel. It is necessary to check the wiring system between the ECM and the connectors of the panel.
In this case, the probable cause is:
The engine kill switch is in the OFF position.
The system of interconnection side stand/gearchange position sensor does not function.
The ignition fuse has blown.

The LED illuminates also when the engine coolant temperature is high or when the oil pressure is low.

Downloaded from www.Manualslib.com manuals search engine

DEALER MODE

The malfunction is memorised in the computer and it is possible to find it by connecting the coupling of the special tool to the coupling of the dealer mode. The malfunction code is visualised on the LCD display panel. Malfunction signifies that the ECM has not received signals from the related devices and these devices are indicated by codes. The coupling of the special tool is connected to the coupling of the dealer mode.

Special tool: 800096687: mode selector

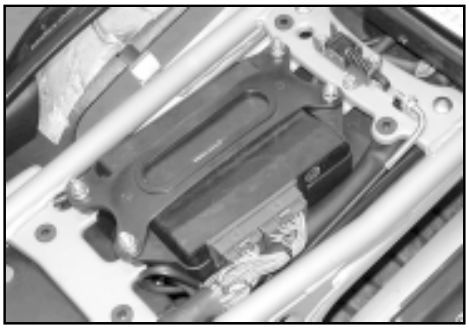

Do not disconnect the couplings of the ECM leads before checking the malfunction code. If the leads are disconnected, the code is cancelled and therefore cannot be further checked.

MALFUNCTION	LCD INDICATION	LED INDICATION	MODE INDICATION
"NO"	c00	Functions as an indicator of the oil pressure	———
"YES"	The c00 code is indicated from the smallest to the biggest code		The code is indicated every 2 seconds

Downloaded from www.Manualslib.com manuals search engine

CODE	MALFUNCTIONING COMPONENT	NOTES
c00	None	No component defective
c11	Camshaft position sensor (CMP sensor)	
c12	Crankshaft position sensor (CKP sensor)	Explorer coil signal, generator signal
c13	Intake air pressure sensor (IAP sensor)	
c14	Throttle position sensor (TP sensor)	*3
c15	Engine coolant temperature sensor (ECT sensor)	
c21	Intake air temperature sensor (IAT sensor)	
c22	Atmospheric pressure sensor (AP sensor)	
c23	Crash sensor (TO sensor)	
c24	Ignition signal #1 (IG #1 signal)	For the front cylinder
c25	Ignition signal #2 (IG #2 signal)	For the rear cylinder
c31	Gearchange position signal (GP switch)	
c32	Injector signal #1 (FI #1 signal)	For the front cylinder
c33	Injector signal #2 (FI #2 signal)	For the rear cylinder
c41	Fuel pump control system (FP control system)	Fuel pump relay Fuel pump

The malfunction code is indicated on the LCD display panel, from the smallest to the biggest code.

*3
To obtain the appropriate signal from the throttle position sensor, the basic sensor position is indicated on the LCD display panel. The malfunction code is indicated in three columns. In front of the three columns is an additional column that indicates the position with an upper, middle or lower line. If the indication is the upper line or lower line when the engine is turning at 1300 rpm, slightly rotate the throttle position sensor and adjust the indication to the middle line.
Under normal conditions, the stop screw of the throttle slightly pushes on the butterfly valve and the indication is on the middle line.

Preparation
1) Connect the special tool (mode selector) to the dealer mode coupling on the wiring and switch on the engine.
2) Adjust the engine speed to 1300 rpm.
3) If it is necessary, adjust the throttle position sensor by loosening the screws and rotating the sensor. Adjust the indication to the middle line.
4) Tighten the screws to fix the sensor.

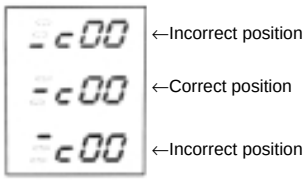

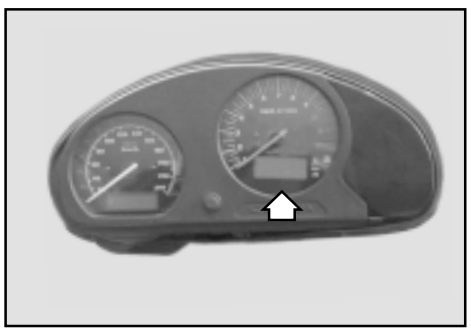

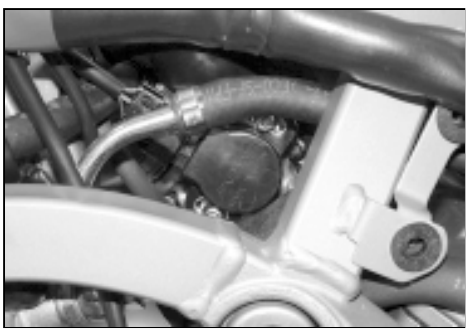

Downloaded from www.Manualslib.com manuals search engine

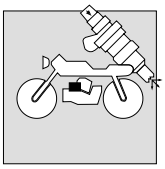

SECURITY FUNCTION

The FI system is supplied with a security system that allows the switching on of the engine and the riding of the machine even when the ECM notes malfunctions.

ITEM		SECURITY INTERVENTION	STARTING	RIDING
Camshaft position sensor		When the signal of the camshaft position sensor lis not received whilst riding, the ECM identifies the cylinder immediately before the missing signal.	NO	YES
			The machine functions but, if the engine is switched off, it cannot be switched on again.	
Crankshaft position sensor		The machine stops	NO	NO
Intake air pressure sensor		Intake air pressure remains fixed at 760 mmHg.	YES	YES
Throttle position sensor		The opening of the throttle remains fixed at the maximum opening. The timing synchronisation also remains fixed.	YES	YES
Engine coolant temperature		The engine coolant temperature value remains fixed at 80°C.	YES	YES
Intake air temperature sensor		The intake air temperature value remains fixed at 40°C.	YES	YES
Atmospheric pressure sensor		The atmospheric pressure value remains fixed at 760 mmHg.	YES	YES
Ignition signal	#1	Ignition #1 disactivated	YES	YES
			Cylinder #2 functions only	
	#2	Ignition #2 disactivated	YES	YES
			Cylinder #1 functions only	
Injection signal	#1	Fuel interruption #1	YES	YES
			Cylinder #2 functions only	
	#2	Fuel interruption #2	YES	YES
			Cylinder #1 functions only	
Gearchange position sensor		The gearchange position signal remains fixed at the 6th gear.	YES	YES

YES indicates that the engine can be switched on or made to work even if the corresponding signal is not received from the sensor. The operating conditions of the engine are not perfect and only an emergency situation (security circuit) allows them to function. It is necessary to take the machine to the dealer service centre to be repaired.

Downloaded from www.Manualslib.com manuals search engine

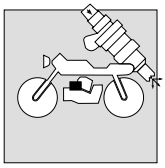

FI DIAGNOSTIC SYSTEM

CLIENT'S CLAIM ANALYSES

CLIENT'S NOTE: Note the details of the problem (defect, claim) and the description of the same. The use of this inspection form helps in the collection of information to carry out analyses and the appropriate diagnosis.

EXAMPLE: CLIENT PROBLEM INSPECTION FORM

User name:	Model:	NIV:	
Date of delivery:	Date registered:	Date of problem:	Mileage/kilometres:

LED condition	❑Always ON ❑At times ON ❑Always OFF ❑Good condition		
Display/code Malfunction (LCD)	User mode:	❑No visualisation	❑Malfunction visible ( )
	Modo concess:	❑No code	❑Malfunction code ( )

PROBLEM	
❑Difficult starting	**❑Poor riding performance**
❑Engine does not turn	❑Hesitant throttle
❑Combustion does not occur	❑Backfiring/pre-combustion
❑Starting does not occur	❑Lack of power
❑Starting does not occur when:	❑Fluctuations
(❑Cold ❑Hot ❑Always)	❑Banging noises in the cylinder head
❑Other_____	❑Other_____
❑Poor minimum rpm setting	**❑The engine stalls**
❑Poor choke setting	❑Immediately after switching on
❑Abnormal tickover	❑When the throttle is opened
(❑High ❑Low) (Rpm)	❑When the throttle is closed
❑Unstable	❑When under load
❑Uneven tickover (from Rpm to Rpm)	❑Other_____
❑Other_____	
❑OTHER PROBLEMS	

AMBIENT/MOTORCYCLE CONDITIONS WHEN THE PROBLEM BECAME APPARENT	
Ambient conditions	
Weather	❑Clear ❑Cloudy ❑Raining ❑Snow ❑Always ❑Other_____
Temperature	❑Very hot ❑Hot ❑Fresh ❑Cold (°F/ °C) ❑Always
Frequency	❑Always ❑At times (times/ day, month) ❑Only once ❑In certain conditions
Road	❑Urban ❑Provincial ❑Motorway ❑Mountain (❑Going up/❑Coming down) ❑Asphalt ❑Gravel ❑Other_____
Motorcycle conditions	
Engine conditions	❑Cold ❑During warming up ❑Hot ❑Always ❑Not when switching on ❑Immediately after switching on ❑Riding without load ❑Engine speed (rpm)
Motorcycle conditions	Whilst riding: ❑Constant speed ❑Under acceleration ❑Under deceleration ❑Right hand curve ❑Left hand curve ❑During the gearchange (position of lever) ❑Motorcycle at stop ❑Speed at which the problem comes to light (mph/kph) ❑Other_____

The above described form is a standard example. It must be modified according to the conditions of each market.

Downloaded from www.Manualslib.com manuals search engine

AUTO-DIAGNOSTIC PROCEDURE

- Do not disconnect the ECM couplings, the battery cables, the ECM Earth wiring from the engine or from the fuse before having checked that the malfunction code (auto-diagnostic code) has been memorised.
  The disconnection of these parts cancel the information memorised in the ECM.
- The memorised malfunction code can be checked by the special tool.
- Before checking the malfunction code, carefully read the AUTO-DIAGNOSTIC FUNCTION “USER MODE AND DEALER MODE” section to fully understand the available functions and their correct use.
- Read the precautions regarding the maintenance of the electrical system (see Chapter G) before the inspection and carry out the instructions as indicated.
- Remove the passenger seat.
- Connect the special tool **A** to the dealer mode coupling on the wiring and turn over the engine for more than 4 seconds.
- Switch on the special tool and check the malfunction code to identify the defective component.

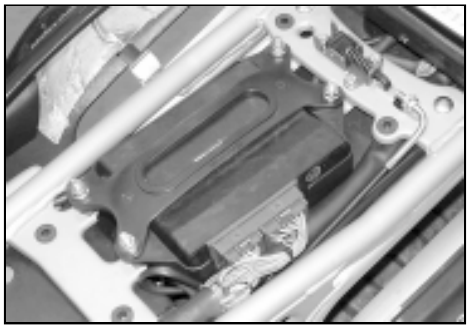

AUTO-DIAGNOSTIC STARTING PROCEDURE

- After having carried out the repair, turn the ignition switch to the OFF position and then ON again.
  If the malfunction code (c00) is indicated, the malfunction has been cancelled.
- Disconnect the special tool from the dealer mode coupling.

Downloaded from www.Manualslib.com manuals search engine

MALFUNCTION CODES AND MALFUNCTIONS

MALFUNCTION CODE	RELATED ITEM	RELATED MALFUNCTION CONDITION CHECK
c00	NO PROBLEM	———
c11	Camshaft position sensor	The signal does not reach the ECM for more than 2 seconds after having received the starting signal. The wiring of the camshaft position sensor and the mechanical parts (camshaft position sensor, rear intake camshaft pin, wiring connections/couplings).
c12	Position sensor	The signal does not reach the ECM for more than 2 seconds after having received the starting signal. The crankshaft position sensor wiring and the mechanical parts (Crankshaft position sensor, wiring/coupling connections).
c13	Intake air pressure sensor	The sensor produces the following voltage: (0,5 V ≤ sensor voltage < 4,5 V) Outside this voltage range, the code c13 is indicated. Intake air pressure sensor, wiring/coupling connections.
c14	Throttle position sensor	The sensor produces the following voltage: (0,2 V ≤ sensor voltage < 4,8 V) Outside this voltage range, the code c14 is indicated. Throttle position sensor, wiring/coupling connections.
c15	Engine coolant temperature sensor	The sensor produces the following voltage: (0,15 V ≤ sensor voltage < 4,85 V) Outside this voltage range, the code c15 is indicated. Engine coolant temperature sensor, wiring/coupling connections.
c21 c21	Intake air temperature sensor	The sensor produces the following voltage: (0,15 V ≤ sensor voltage < 4,85 V) Outside this voltage range, the code c21 is indicated. Intake air temperature sensor, wiring/coupling connections.
c22 c22	Atmospheric pressure sensor	The sensor produces the following voltage: (0,25 V ≤ sensor voltage < 4,85 V) Outside this voltage range, the code c22 is indicated. Atmospheric pressure sensor, wiring/coupling connections.
c23	Crash sensor	The sensor voltage is less than 4.85V for more than 8 seconds after having turned the ignition switch to the ON position. (Sensor voltage < 4,85 V) Outside this voltage range, the code c23 is indicated. Crash sensor, wiring/coupling connections.
c24	Ignition signal #1 (front)	The crankshaft position sensor signal (explorer coil) is transmitted but the signal of the ignition coil is never produced more than twice. Code c24 is indicated for the front cylinder. Code c25 is indicated for the rear cylinder.

Downloaded from www.Manualslib.com manuals search engine

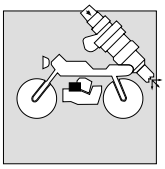

c25	Ignition signal (#2 rear)	Code c25 is indicated for the rear cylinder. The ignition coil, wiring/coupling connections, battery feed.
c31	Gearchange position signal	The signal voltage of the gearchange position must be higher than 0.60V for more than 2 seconds. (Gearchange position sensor voltage > 0.60V). Gearchange position sensor, wiring/coupling connections. Gearchange pre-selector, etc.
c32	Fuel injector signal #1 (front)	The fuel injection signal is interrupted. Codes c32 or c33 are indicated.
c33	Fuel injection signal (#2 rear)	Injector, wiring/coupling connections, injector feed.
c41	Fuel pump relay signal	When no signal is received from the fuel pump relay, code c41 is indicated. Fuel pump relay, wiring, relay feed.

Downloaded from www.Manualslib.com manuals search engine

"C11" CMP SENSOR CIRCUIT MALFUNCTION

PROBLEM	POSSIBLE CAUSE
CMP sensor signal is missing for 2 seconds when the engine is turned.	• Metal particles or foreign bodies on the CMP sensor or on the end of the rotor. • CMP sensor circuit open or in short-circuit. • CMP sensor malfunction. • ECM malfunction.

CHECK

- Remove the seat and the band underneath the seat as described in Chapter B.

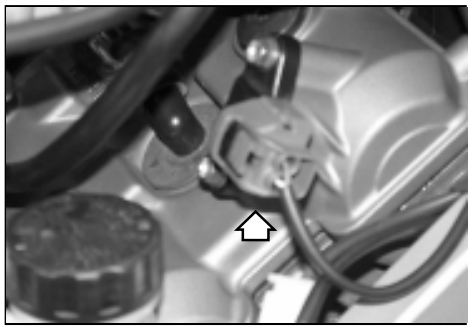

1 Turn the ignition switch to the OFF position.
Check to see if the connector contacts of the CMP sensor are loose or ruined.
If OK, measure the resistance of the CMP sensor.
Disconnect the CMP sensor connector and measure the resistance.
CMP sensor resistance: 0,9-1,3 kΩ
(Terminal - Terminal)
If the resistance is OK, check the continuity between each terminal and Earth.
CMP sensor continuity: ∞Ω (infinite)
(Terminal - Earth)

Tester dial indication: Resistance (Ω)

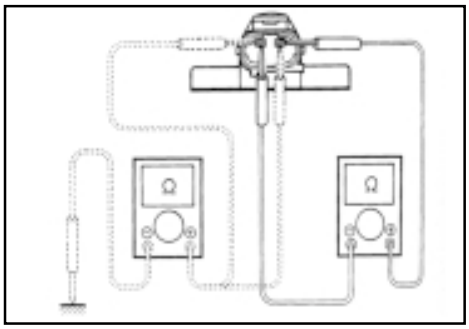

NO → Substitute the CMP sensor.

YES ↓

2 Disconnect the CMP sensor connector.
Turn the engine over for several seconds with the starter motor, and measure the peak voltage at the CMP sensor.
CMP sensor peak voltage: More than 0.8V
(Red/black – Grey/brown)
Repeat the described test procedure several times and measure the peak voltage.
If OK, measure the peak voltage of the CMP sensor on the terminals of the ECM (G+G or 5 or 14).

Tester dial indication: Voltage (⎓)

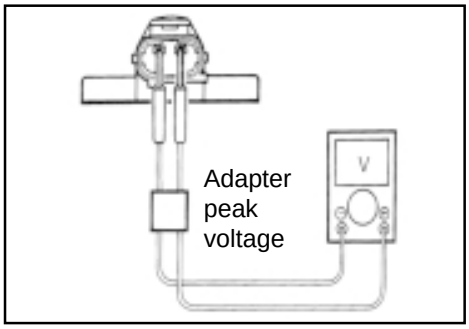

NO → The contacts of the CMP sensor connector are loose or ruined.
Substitute the CMP sensor.

YES ↓

Red/black lead or grey/brown lead circuit open or in short-circuit to Earth. Or connection 14 or 5 ruined.
If the leads and the connections are OK, the problem is intermittent or the ECM is defective.
Recheck each terminal and the wiring for open circuits or ruined connections (see page C-5).

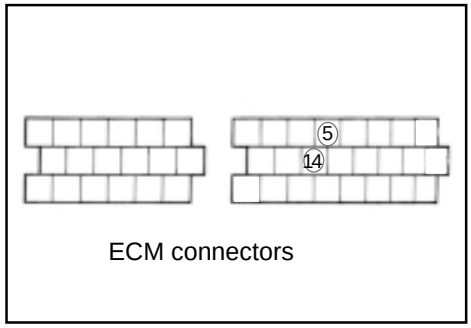

→ Substitute the ECM and recheck.

Downloaded from www.Manualslib.com manuals search engine

"C12" CKP SENSOR CIRCUIT MALFUNCTION

PROBLEM	POSSIBLE CAUSE
CKP sensor signal missing for 2 seconds when the engine is turned over.	• Metal particles or foreign bodies on the CKP sensor or on the end of the rotor. • CKP sensor circuit open or in short-circuit. • CKP sensor malfunction. • ECM malfunction.

CHECK

- Remove the sump guard as described in page B-7.
- Disassemble the left hand engine cover as described in page D-28.

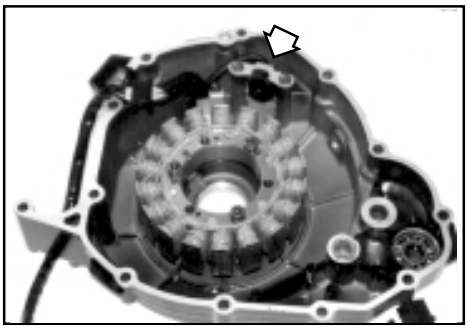

1 Turn the ignition switch to the OFF position.
Check to see if the connector contacts of the CKP sensor are loose or ruined.
If OK, measure the resistance of the CKP sensor.
Disconnect the connector of the CKP sensor and measure the resistance.
CKP sensor resistance: 184-276 Ω (violet/blue – green/blue)
If the resistance is OK, check the continuity between each terminal and Earth.
CKP sensor continuity: ∞ Ω (infinite) (Violet/blue – Earth) (Green/blue – Earth)
Tester dial indication: Resistance (Ω)

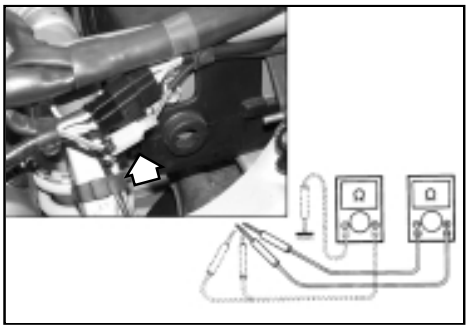

NO → Substitute the CKP sensor.

YES ▼

2 Disconnect the CKP sensor connector.
Turn the engine over with the starter motor for several seconds and measure the peak voltage at the CKP sensor.
CKP sensor peak voltage: More than 4V
Violet/blue Green/blue
Repeat the described test procedure several times and measure the peak voltage.
If OK, measure the peak voltage of the CKP sensor at the terminals of the ECM (N+N or 4 or 13).
Tester dial indication: Voltage (⎓)

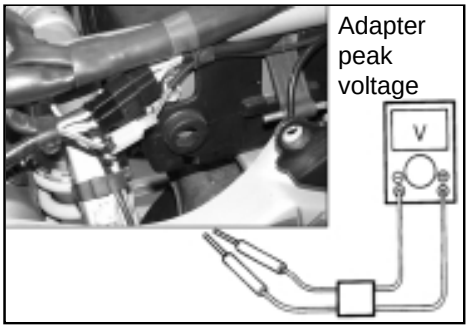

NO → The connector contacts of the CKP sensor or the ECM are loose or ruined.

YES Substitute the CKP sensor.

The violet/blue lead or the green/blue lead circuits are open or in short-circuit. Or the connections 4 or 13 are ruined.
If the leads and the connections are OK, the problem is intermittent or the ECM is defective.
Recheck each terminal and the wiring for open circuits or ruined contacts (see page C-5).

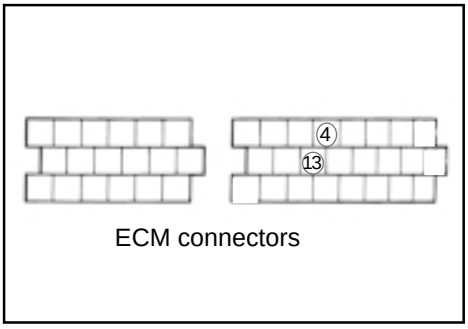

ECM connectors

→ Substitute the ECM and recheck.

Downloaded from www.Manualslib.com manuals search engine

"C13" SENSOR CIRCUIT MALFUNCTION

PROBLEM	POSSIBLE CAUSE
Low voltage and pressure. High voltage and pressure. (0,5V Sensor voltage < 4,5V) Outside the indicated range. *NOTE:* *Note that the atmospheric pressure varies according to weather conditions and the altitude.* *Take into consideration these factors when checking the voltage.*	• Suction passageway between the carburettor and the IAP sensor blocked. • Air taken in from the suction passageway between the carburettor and the IAP sensor. • Red/orange lead circuit open or in short-circuit to Earth. • Black/brown or yellow/grey lead circuit in short-circuit to Earth. • IAP sensor malfunction. • ECM malfunction.

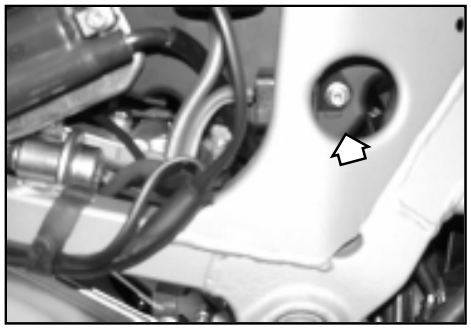

CHECK
- Remove the seat.
- Disassemble the left hand fuel tank as described in Chapter B.

1 Turn the ignition switch to the OFF position.
Check to see if the connector contacts of the IAP sensor are loose or ruined.
If OK, measure the incoming voltage of the IAP sensor.
Disconnect the connector of the IAP sensor.
Turn the ignition switch to the ON position.
Measure the voltage between the red/orange lead and Earth.
If OK, measure the voltage between the red/orange lead and the black/brown lead.

IAP sensor incoming voltage. 4.5-5.5V
(Red/orange –Earth)
(Red/orange –black/brown)

Tester dial indication: Voltage (⎓)

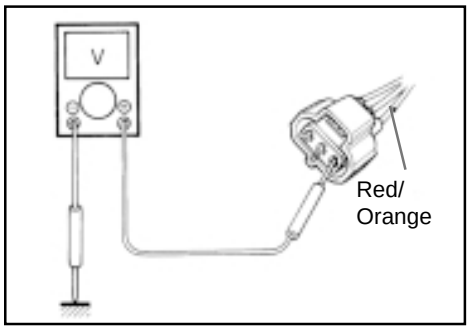

NO → ECM connector contacts loose or ruined. Open circuit or short-circuit of the red lead or the black/brown lead.

YES ↓

2 Connect the IAP sensor connector.
Switch on the engine and let it run on tickover.
Measure the outgoing voltage of the IAP sensor on the connector between the yellow/grey lead and the black/brown lead.
IAP sensor outgoing voltage: approx. 1.8V at minimum
(yellow/grey –black/brown)

Tester dial indication: Voltage (⎓)

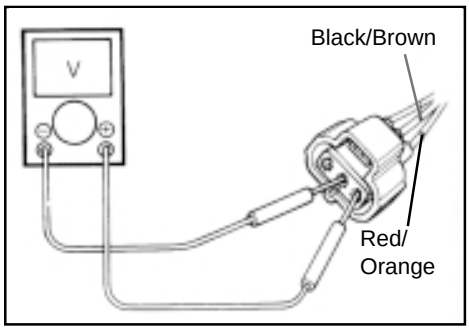

NO → Check to see if the suction tube is cracked or damaged.
Yellow/grey lead circuit open or in short-circuit.

YES ↓ Substitute the IAP sensor.

Downloaded from www.Manualslib.com manuals search engine

3 Remove the IAP sensor.
Connect a suction pump with a dial to the suction passageway of the IAP sensor.
Connect three batteries of 1.5V in series (check that the total voltage is 4.5-5.0V) and connect the – terminal to the Earth terminal and the + terminal to the Vcc terminal.
Check the voltage between the outgoing terminal and Earth.
Also check to see if the voltage drops when a suction of 40 cmHg is applied by the pump (see the table below).

Special tool: 800096673: Suction pump with dial

Tester dial indication: Voltage (⎓)

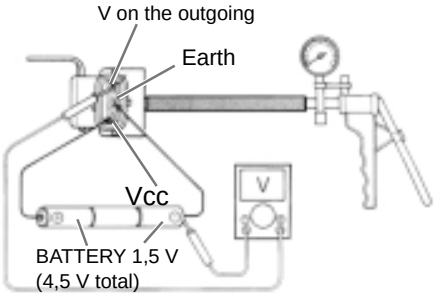

NO → If the results of the test are not clear, substitute the IAP sensor.

YES ↓

Red/orange lead, yellow/grey lead or black/brown lead circuits open or in short-circuit to Earth. Or connections 9, 1 or 24 are ruined.
If the leads and the connections are OK, the problem is intermittent or the ECM is defective.
Recheck each terminal and the wiring for open circuits or ruined connections (see page C-6).

→ Substitute the ECM and recheck.

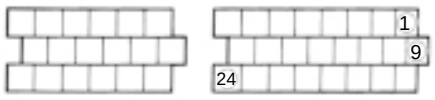

ECM connectors

Outgoing voltage (Vcc voltage 4.5-5.0V, ambient temperature 20-30°C.)

ALTITUDE (Metres)	ATMOSPHERIC PRESSURE		OUTGOING VOLTAGE
(m)	(mmHg)	kPa	(V)
0 I 610	760 I 707	100 I 94	3,1-3,6
611 I 1524	Less than 707 More than 634	94 I 85	2,8-3,4
1525 I 2438	Less than 634 More than 567	85 I 76	2,6-3,1
2439 I 3048	Less than 567 More than 526	76 I 70	2,4-2,9

Downloaded from www.Manualslib.com manuals search engine

TP "C14" SENSOR CIRCUIT MALFUNCTION

PROBLEM	POSSIBLE CAUSE
High or low voltage signal Difference between the actual opening of the throttle and the opening calculated by the ECM that is more than specified (0,2V ≤ sensor voltage < 4,8V) outside of the specified range.	• TP sensor maladjusted. • TP sensor circuit open or short-circuited. • TP sensor malfunction. • ECM malfunction.

CHECK

- Remove the left hand fuel tank as described in Chapter B.

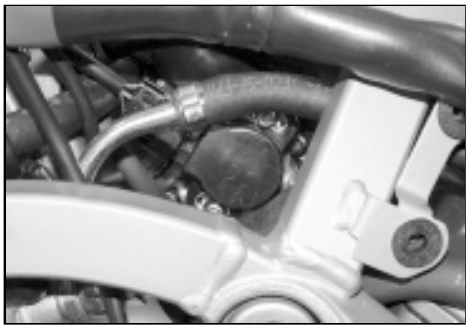

1 Ensure that the ignition switch is in the OFF position.
Check to see if the contacts of the TP sensor connector are loose or ruined.
If they are OK, measure the incoming voltage of the TP sensor.
Disconnect the TP sensor connector.
Switch the ignition to the orange position.
Measure the voltage between the red lead and Earth.
If OK, measure the voltage between the red lead and the black/brown lead.
TP sensor incoming voltage: 4.5V-5.5V.
(+Red/orange –Earth)
(+red/orange –grey/orange)
Tester dial indication: Voltage (⎓)

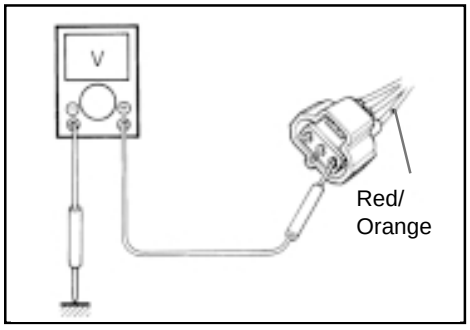

NO → The ECM connector contacts are loose or ruined. Open circuit or short-circuit of the red/orange lead or the grey/orange lead.

YES ↓

2 Ensure that the ignition switch is in the OFF position.
Disconnect the TP sensor connector.
Check the continuity between the terminal (grey/orange lead) and Earth.
TP sensor continuity: ∞Ω (infinity)
(Grey/orange-Earth terminal)
If OK, measure the resistance of the TP sensor at the sensor terminals (between the terminals of the grey/orange lead and the black/brown lead).
Turn the throttle handgrip and measure the resistance.
TP sensor resistance:
Throttle closed: Approx. 1,2 KΩ
Throttle open: Approx. 4,4 KΩ
Tester dial indication: Resistance (Ω)

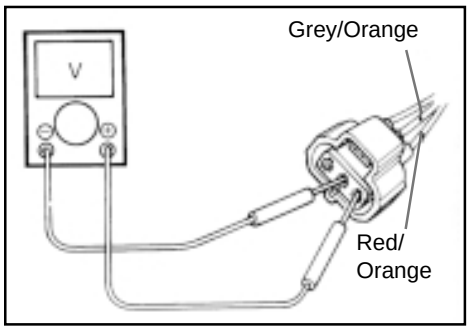

NO → Correctly adjust correctly the TP sensor position.
Substitute the TP sensor.

YES ↓

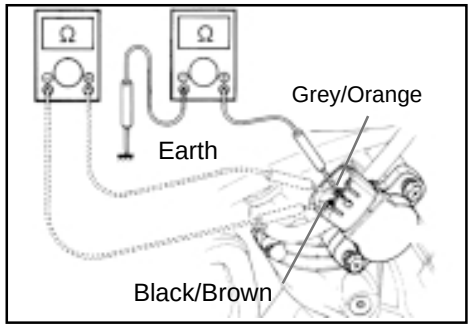

Downloaded from www.Manualslib.com manuals search engine

3	Connect the TP sensor connector. Turn the ignition switch to the ON position. Measure the outgoing voltage of the TP sensor on the connector (between the grey/orange lead and the black/brown lead) whilst turning the handgrip of the throttle. **TP sensor outgoing voltage:** **Throttle closed: Approx. 1.1V** **Throttle open: Approx. 4.2V** **Tester dial indication: Voltage (⎓)**

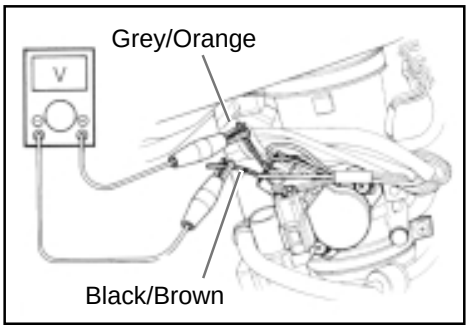

NO → If the results of the check do not prove satisfactory, substitute the TP sensor.

YES

The red/orange lead, grey/orange lead or black/brown lead circuits are open or in short-circuit to Earth or the 9.2 or 24 contacts are ruined.
If the leads and the connections are OK, the problem is intermittent or the ECM is defective.
Recheck each terminal and the wiring for open circuits or ruined contacts. (See page C-6)

→ Substitute the ECM and recheck.

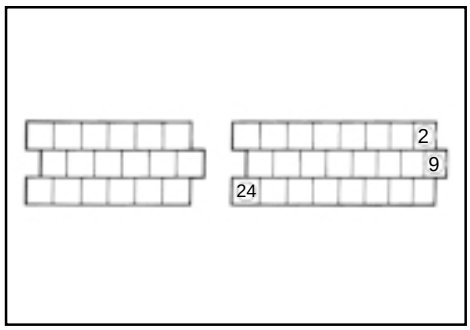

Downloaded from www.Manualslib.com manuals search engine

ECT "C15" SENSOR CIRCUIT MALFUNCTION

PROBLEMS	POSSIBLE CAUSE
High temperature of the engine coolant (low voltage – low resistance) Low temperature of the engine coolant (high voltage – high resistance)	• Brown/violet lead circuit in short-circuit to Earth. • Black/brown lead circuit open. • ECT sensor malfunction. • ECM malfunction.

CHECK

1 Turn the ignition switch to the OFF position.
Check to see if the ECT sensor connector contacts are loose or ruined.
If OK, measure the voltage of the ECT sensor at the lead coupling.
Disconnect the connector and turn the ignition switch to the ON position.
Measure the voltage between the terminal of the brown/violet lead and Earth.
If OK, measure the voltage between the terminal of the brown/violet lead and the terminal of the black/brown lead.
ECT sensor incoming voltage: 4.5-5.5V
(+brown/violet - Earth)
(+Brown/violet - black/brown)

Tester dial indication: Voltage (⎓)

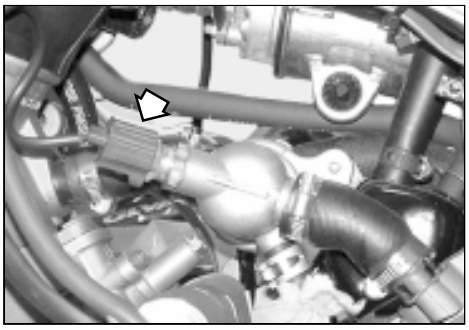

NO → ECM coupling contacts loose or ruined. Green/yellow lead or black/brown lead circuit open or in short-circuit.

YES ↓

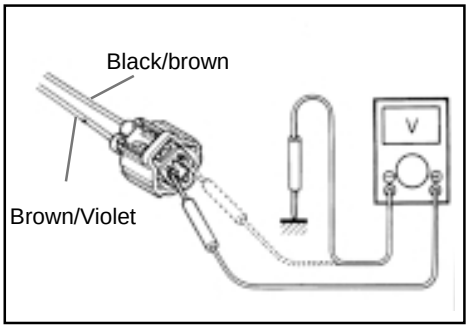

2 Turn the ignition switch to the OFF position.
Measure the resistance of the ECT sensor.
Check the continuity between the grey lead terminal and Earth.
ECT sensor resistance: 2,3-2,6 kΩ at 20°C

Tester dial indication: Resistance (Ω)
See page C-8 for details.

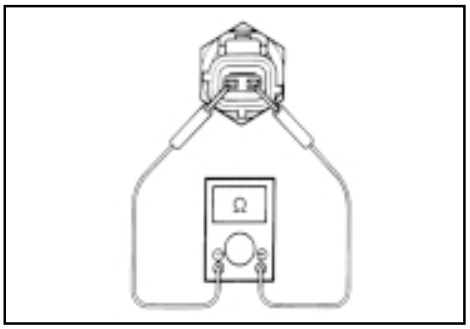

NO → Substitute the ECT sensor.

YES ↓

The brown/violet lead or the black/brown lead circuit are open or in short-circuit to Earth or the connectors 11 or 24 are ruined.
If the leads and the connections are OK, the problem is intermittent or the ECM is defective.
Recheck each terminal and the wiring for open circuits or ruined connections (see page C-6).

→ Substitute the ECM and recheck.

Engine coolant temperature	Resistance
20°C	Approx. 2,45 KΩ
50°C	Approx. 0,811KΩ
80°C	Approx. 0,318KΩ
110°C	Approx. 0,142KΩ

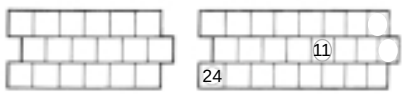

ECM connectors

Downloaded from www.Manualslib.com manuals search engine

"C21" IAT SENSOR CIRCUIT MALFUNCTION

PROBLEM	POSSIBLE CAUSE
High temperature – air intake (low voltage – low resistance) Low temperature – air intake (high voltage – high resistance)	• Yellow/brown lead circuit in short-circuit to Earth. • Black/brown lead circuit open. • IAT sensor malfunction. • ECM malfunction.

CHECK

• Remove the fuel tank as described in Chapter B.

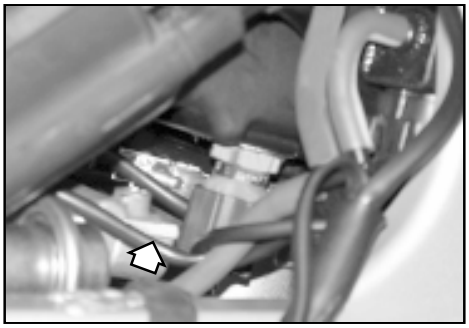

1 Turn the ignition switch to the OFF position.
Check to see if the contacts of the IAT sensor connector are loose or ruined.
If OK, measure the voltage of the IAT sensor at the wiring coupling.
Disconnect the connector and turn the ignition switch to the ON position.
Measure the voltage between the terminal of the yellow/brown lead and the terminal of the black/brown lead.
IAT sensor voltage: 4.5-5.5V
(+yellow/brown –Earth)
(+yellow/brown –black/brown)

Tester dial indication: Voltage (⎓)

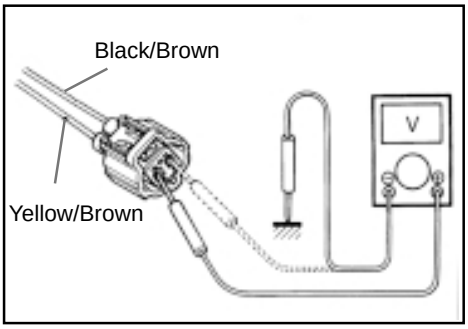

NO → ECM connector contacts loose or ruined. Yellow/brown lead circuit or black/brown lead circuit open or in short-circuit.

YES ▼

2 Turn the ignition switch to the OFF position.
Measure the resistance of the IAT sensor.

IAT sensor resistance: 2,2-2,7 kΩ at 20°C
(Terminal - Terminal)

Tester dial indication: Resistance (Ω)

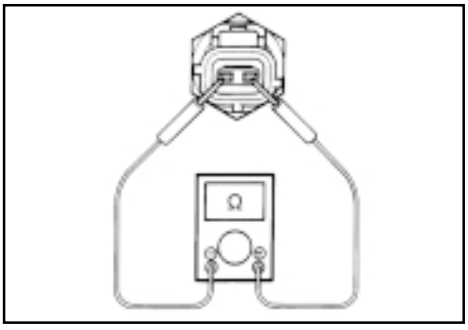

NO → Substitute the IAT sensor.

YES ▼

Yellow/brown lead circuit or black/brown lead circuit open or in short-circuit to Earth. Or the connections 12 or 24 are ruined (see page C-6). If the leads and connections are OK, the problem is intermittent or the ECM is defective.
Recheck each terminal and the wiring for open circuits or ruined connections.

→ Substitute the ECM sensor and recheck.

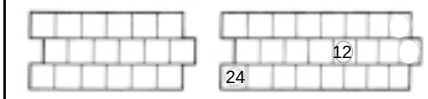

ECM connectors

Engine coolant temperature	Resistance
20°C	Approx. 2,45 KΩ
50°C	Approx. 0,811KΩ
80°C	Approx. 0,318 KΩ
110°C	Approx. 0,142 KΩ

The method of measuring the resistance of the IAT sensor is the same as the method utilised for the ECT sensor (see page C-43 for details).

Downloaded from www.Manualslib.com manuals search engine

"C22" AP SENSOR CIRCUIT MALFUNCTION

PROBLEM	POSSIBLE CAUSE
Low pressure and high voltage. High pressure and high voltage. (0,25V ≤ Voltage sensor < 4,85V) outside the indicated range. *NOTE:* *Note that the atmospheric pressure varies according to the weather conditions and the altitude.* *Take into consideration these factors when checking the voltage.*	• Passage of air blocked by dust. • Red/orange lead circuit open or in short-circuit to Earth. • Black/brown lead circuit or green lead circuit in short-circuit to Earth. • AP sensor malfunction. • ECM malfunction.

CHECK

• Remove the seat.



1 Turn the ignition switch to the OFF position.
Check to see if the contacts of the AP sensor connectors are loose or ruined.
If OK, measure the incoming voltage of the AP sensor.
Turn the ignition switch to the ON position.
Disconnect the AP sensor connectors.
Measure the voltage between the terminal of the red/orange lead and Earth.
If OK, measure the voltage between the terminal of the red/orange lead and the terminal of the black/brown lead.

AP sensor incoming voltage: 4.5-5.5V
(+red/orange –Earth)
(+red/orange –black/brown)
Tester dial indication: Voltage (⎓)

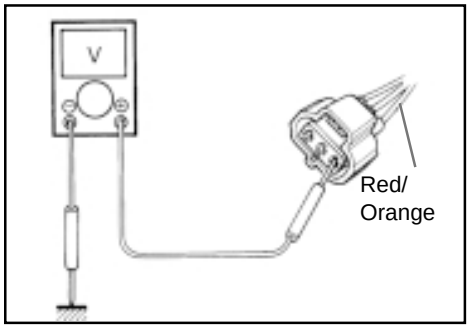

NO → ECM coupling contacts loose or ruined.
Red or black/brown lead circuits open or in short-circuit.

YES ↓

2 Connect the AP sensor coupling.
Turn the ignition switch to the ON position. Measure the outgoing voltage of the AP sensor at the wiring connector between the violet/yellow lead and the black/brown lead.
AP sensor outgoing voltage: approx. 3.6V
at 760 mmHg
(100kPa)
(+violet/yellow-black/brown)

Tester dial indication: Voltage (⎓)

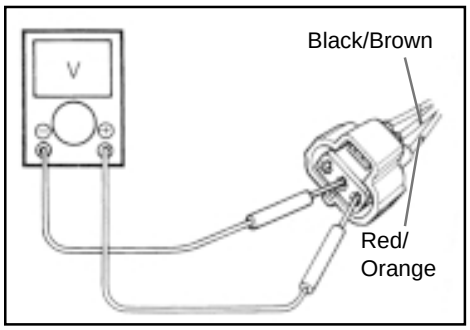

NO → Check to see if the air passage is blocked.
Violet/yellow lead circuit open or in short-circuit.
Substitute the AP sensor.

YES ↓

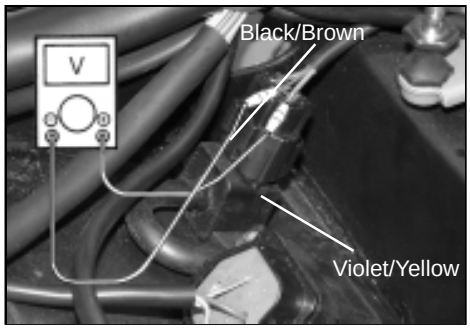

Downloaded from www.Manualslib.com manuals search engine

3	Remove the AP sensor. Connect a suction pump with a dial to the suction passageway of the AP sensor. Connect three 1.5V batteries in series (check that the total volts is 4.5-5.0V). Connect the – terminal to the earth terminal and + terminal to the Vcc terminal. Check the voltage between the exit and Earth. Also check the voltage drop when a suction of 40 cmHg is applied via the suction pump (see the table below). **Special tool: 800096673: Suction pump with dial.** **Tester dial indication: Voltage (⎓)**

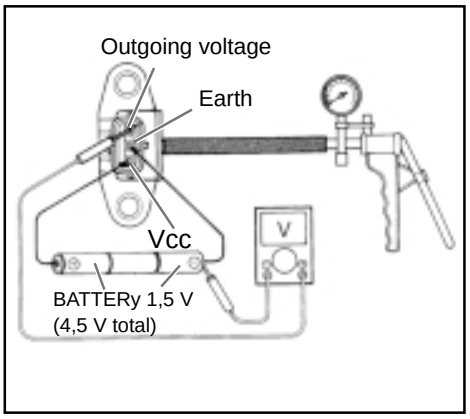

NO → If the test result is not clear, substitute the AP sensor.

YES

Red/orange lead circuit, violet/yellow lead circuit, black/brown lead circuit open or in short-circuit. To Earth. Or connections 9,10 or 24 ruined. If the leads and the connections are OK, the problem is intermittent or the ECM is defective.
Recheck each terminal and wiring for open circuits or ruined connections (see page C-6).

→ Substitute the ECM and recheck.

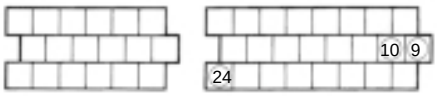

ECM connectors

Outgoing voltage (Vcc voltage – 4.5-5.0V, ambient temperature 20-30°C.).

ALTITUDE (Metres)	ATMOSPHERIC PRESSURE		OUTGOING VOLTAGE
(m)	(mmHg)	kPa	(V)
0 I 610	760 I 707	100 I 94	3,1-3,6
611 I 1524	Less than 707 More than 634	94 I 85	2,8-3,4
1525 I 2438	Less than 634 More than 567	85 I 76	2,6-3,1
2439 I 3048	Less than 567 More than 526	76 I 70	2,4-2,9

Downloaded from www.Manualslib.com manuals search engine

"C23" TO SENSOR CIRCUIT MALFUNCTION

PROBLEM	POSSIBLE CAUSE
Missing TO sensor signal for several seconds after the ignition switch has been turned ON. Voltage signal or high. (Sensor voltage < 4,85 V) outside the indicated range.	• TO sensor circuit open or in short-circuit. • TO sensor malfunction. • ECM malfunction.

CHECK

- To reach the TO sensor, read the disassembly procedure in Chapter B.

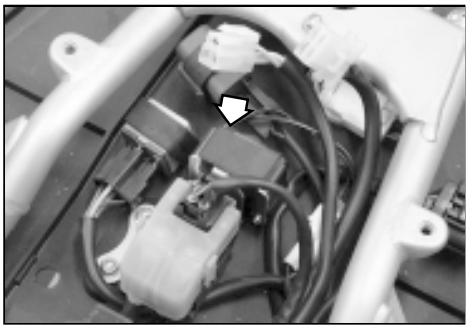

1 Turn the ignition switch to the OFF position.
Check to see if the connector contacts of the TO sensor are loose or ruined.
If OK, measure the resistance of the TO sensor.
Measure the resistance between the terminals of the black lead and the black/white lead.

TO sensor resistance: 60-64KΩ
(black-black/white)

NO → Substitute the TO sensor.

YES ↓

2 Connect the TO sensor connector.
Turn the ignition switch to the ON position.
Measure the voltage at the wiring connector between the black lead and the black/white lead.
TO sensor voltage: Approx. 2.5V minimum.
(Black/black/white)
Also measure the voltage whilst leaning the machine over.
Disassemble the TO sensor from its support and measure the voltage inclining it left and right, more than 43° from the horizontal position.
TO sensor voltage: 0V (black-black/white)

Tester dial indication: Voltage (⎓)

NO → ECM connector contacts loose or ruined. Green/brown lead circuit open or in short-circuit.

YES ↓ Substitute the TO sensor.

Green/brown lead circuit or black/brown lead circuit open or in short-circuit to Earth. Or 19 and 24 contacts are ruined.
If the leads and the connections are OK, the problem is intermittent or the ECM is defective.
Recheck each terminal and the wiring for open circuits or ruined connections (see page C-6)

→ Substitute the ECM and recheck.

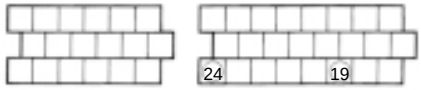

ECM connectors

Downloaded from www.Manualslib.com manuals search engine

“C24” OR “C25” IGNITION SYSTEM MALFUNCTION (see page G24)
“C31” GEARCHANGE SENSOR CIRCUIT MALFUNCTION

PROBLEM	POSSIBLE CAUSE
Gearchange position switch voltage not present Low switch voltage (Switch voltage > 0,6 V) outside the indicated range.	• Gearchange position switch circuit open or in short-circuit. • Gearchange position switch malfunction. • ECM malfunction.

CHECK

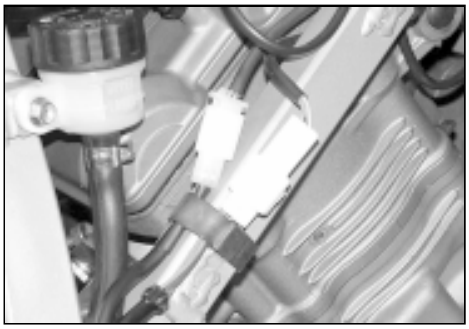

1 Turn the ignition switch to the OFF position.
Check to see if the connector contacts of the GP switch are loose or ruined.
If OK, measure the voltage of the GP switch.
Lift up the machine on a suitable support.
Lift up the side stand.
Turn the engine kill switch to the ON position.
Turn the ignition switch to the ON position.
Measure the voltage at the wiring connector between the red lead and Earth, changing from 1st to 6th gear.

GP switch resistance: More than 0.6V
(Orange/yellow- Earth)
…
Tester dial indication: Voltage (—)

NO → Red lead circuit open or in short-circuit.
Substitute the GP switch.

YES ▼

Orange/yellow lead circuit open or in short-circuit to Earth. Or contact 18 ruined.
If the leads and connections are OK, the problem is intermittent or the ECM is defective.
Recheck each terminal and wiring for open circuits or ruined connections. (see page C-6).

→ Substitute the ECM and recheck.

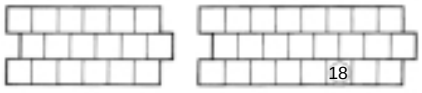

ECM Connectors

Downloaded from www.Manualslib.com manuals search engine

"C32" OR "C33" FUEL INJECTION MALFUNCTION

PROBLEM	POSSIBLE CAUSE
Injector current not present.	• Injector circuit open or in short-circuit. • Injector malfunction. • ECM malfunction.

CHECK
- Remove the seat.
- Remove the fuel tank as described in Chapter B.
- Remove the air filter.

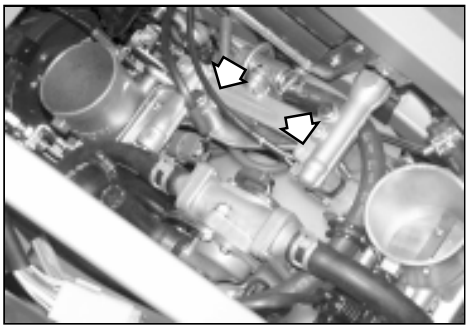

1 Turn the ignition switch to the OFF position.
Check to see if the connector contacts of the injector are loose or ruined.
If OK, measure the resistance of the injector.
Disconnect the connector and measure the resistance between the terminals.
Resistance INJ #1 or #2: 11 - 16Ω at 20° C
(Terminal - Terminal)
If the resistance is OK, check the continuity between each terminal and Earth.
Continuity INJ #1 o#2: ∞Ω (infinite)
(Terminal - Terminal)

Tester dial indication: Resistance (Ω)

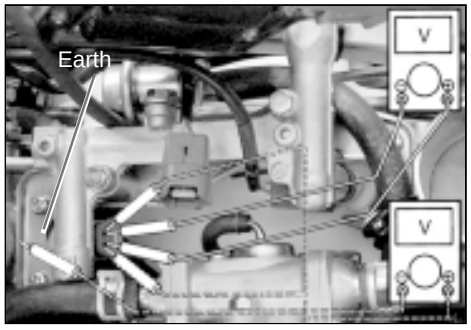

NO → Substitute the injector.

YES

2 Turn the ignition switch to the ON position.
Measure the voltage of the injector between the orange lead and Earth.
Voltage INJ #1 or #2: Battery voltage
(Orange – Earth)

Tester dial indication: Voltage (⎓)

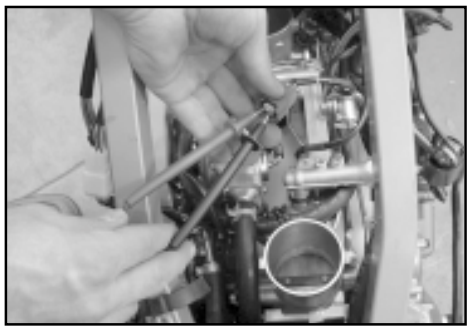

NO → Orange lead circuit open.

YES

Blue/white lead circuit, white/black lead circuit or orange lead circuit open or in short-circuit to Earth.. Or contacts 3, 4 or 3 ruined.
If the leads and the connections are OK, the problem is intermittent or the ECM is defective.
Recheck each terminal and the wiring for open circuits or ruined connections. (see page C-6).

→ Substitute the ECM and recheck.

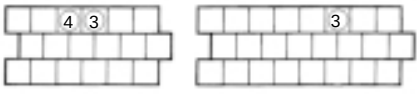

ECM Connectors

Downloaded from www.Manualslib.com manuals search engine

"C41" FP RELAY CIRCUIT MALFUNCTION

PROBLEM	POSSIBLE CAUSE
Relay signal at the fuel pump not present.	• Fuel pump relay circuit open or in short-circuit. • Fuel pump relay malfunction. • ECM malfunction.

CHECK

• Remove the seat.

1 Turn the ignition switch to the OFF position.
Check to see if the coupling contacts of the FP relay are loose or ruined.
If OK, check the isolation and the continuity by referring to page C-6 for details.

NO → Substitute the FP relay.

YES

Blue/violet lead circuit or brown lead circuit open or in short-circuit to Earth. Or the contacts 1 or 7 are ruined (see page C-28).
If the leads and the connections are OK, the problem is intermittent or the ECM is defective.
Recheck each terminal and the wiring for open circuits or ruined connections. (see page C-6).

→ Substitute the ECM and recheck.

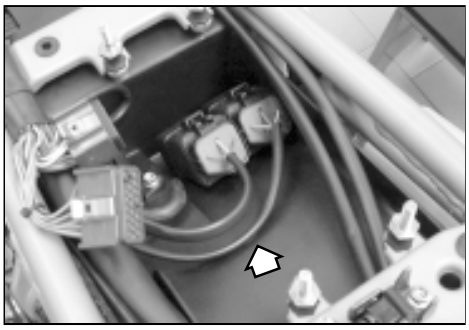

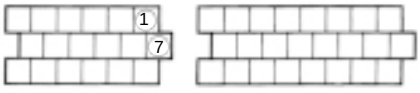

ECM Connectors

Downloaded from www.Manualslib.com manuals search engine

FUEL PRESSURE CHECK



- Remove the seat.
- Remove the fuel tank as described in Chapter B.
- Place a cloth underneath the fuel pressure control plug **1**. Slacken it slowly and collect the remaining fuel by utilising a suitable container.
- Remove the fuel pressure control plug **1** and insert the special tool.

Special tool: 800096688: fuel pressure sensor adaptor
800096663: High pressure instrument
800096661: Oil pressure measuring tube

Turn the ignition switch to the ON position and check the fuel pressure.
Fuel pressure: 2.9 kg/cm² (290 kPa)
If the fuel pressure is less than specified, check the following:
* Fuel tube leak
* Blocked fuel filter
* Pressure regulator
* Fuel pump

If the fuel pressure is more then specified, check the following:
* Blocked or pinched fuel return tube.
* Fuel pump control valve
* Pressure regulator

*** Before removing the special tools, turn the ignition switch to the OFF position and slowly release the fuel pressure.**
*** Petrol is highly inflammable and explosive. Do not expose to heat sources, sparks and naked flames.**

Replace the plug sealing washer with a new one to avoid fuel leaks.

- Tighten the fuel pressure control plug to the specified torque.

Torque pressure
Fuel pressure control plug: 10 N.m (1.0 kg-m)

Downloaded from www.Manualslib.com manuals search engine

FUEL PUMP CONTROL

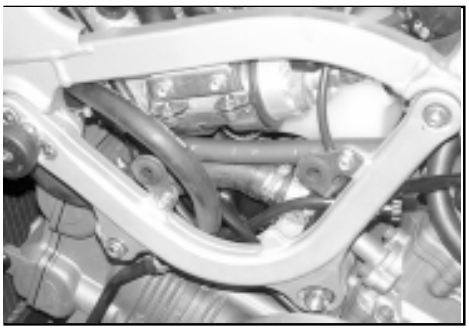

Turn the ignition switch to the ON position and check that the fuel pump operates for several seconds.
If the pump motor makes no sound to indicate that it is operating, carry out the following checks:
- Check the electrical output of the pump at the pump terminals.
- Check the fuel pump relay as follows:
- Check that the crash sensor functions.
- Check that the fuses of the system are OK.

If the pump still does not emit a sound, substitute the pump assembly.

FUEL FLOW QUANTITY CONTROL

- Remove the seat
- Remove the right hand fuel tank as described in Chapter B.
- Disconnect the fuel tube from the incoming union as indicated in the fig.
- Insert the tube in a graduated tube.
- Turn the ignition switch to the ON position and measure the quantity of fuel discharged.

If the quantity discharged is not within the specified quantity, it means that the fuel pump is defective or the fuel filter is blocked.

Fuel flow: 26-30 ml/3 sec

*** The battery must be completely charged.**
*** Check that there is at least 3 litres of fuel in the tank.**
*** Carry out the test with the machine on the main stand.**

FUEL PUMP REMOVAL

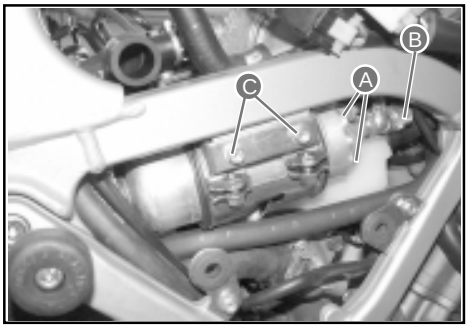

After having removed the expansion tank as described in the ENGINE chapter, proceed as follows:
- Disconnect the two leads from screw **A**.
- Remove the fuel union **B** taking care not to spill any residual fuel.
- Remove the two fixings **C** from the fuel pump support.
- Remove the pump.
- When reassembling, proceed in reverse order to the removal. Tighten the two screws **C** to a torque pressure of 9,8÷11,7 N·m.

FUEL PUMP RELAY CHECK



The fuel pump relay is situated underneath the seat compartment and can be individuated by the orange, red, brown and violet leads.

Firstly, check the isolation of the terminals **1** and **2** with a portable tester. Therefore, apply 12 volts to the terminals **3** and **4** (the + to terminal 4 and the – to terminal 3) and check the continuity between **1** and **2**.

If there is not continuity, substitute the relay.

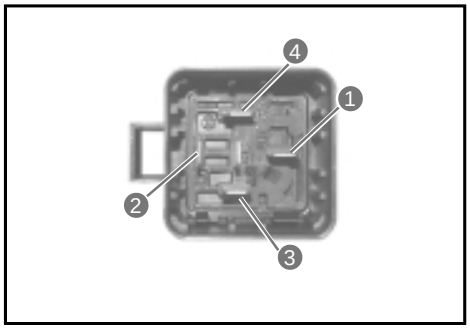

FUEL FILTER REMOVAL

There are two fuel filters fitted on this machine. One is on the suction side of the pump and is situated inside the left hand fuel tank. The other is mounted on the incoming fuel pipeline and is externally mounted.

Petrol is highly inflammable and explosive.
Do not expose to heat sources, sparks and naked flames.

Downloaded from www.Manualslib.com manuals search engine

INTAKE FILTER

After having removed the left hand fuel tank, remove the central union indicated in the figure as follows:

- Slacken the locking ring nut **1**.
- Unscrew the union **2** complete with filter.
- Blow and clean with compressed air.

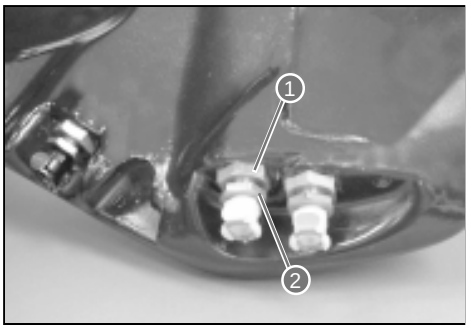

Carry out the reassembly in reverse order of removal.

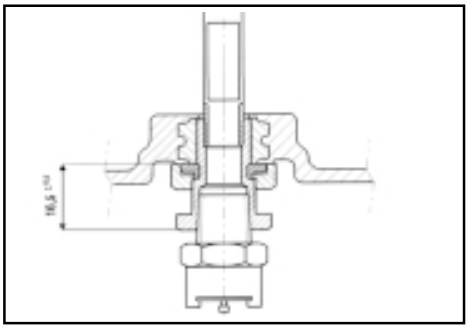

The assembly must be carried out respecting the quota indicated in the figure.

AGIP Grease 30: apply grease on both sides of the washer.

INCOMING FUEL FILTER

After having removed the seat compartment, place a cloth underneath the filter as shown in the figure. Remove the filter from the elastic supports after having removed the bands from the frame tubes. When reassembling, pay attention to the arrow on the filter. This arrow indicates the direction of the fuel flow.



Check the condition of all fuel tubing.

FUEL RESERVE PROBE

The probe is mounted on the right hand fuel tank as shown in the figure. **To carry out electrical checks on this component, the probe must be dry (which means that the tank is dry).**
Measure the resistance value using a tester on the terminals of the probe connectors.
Resistance: 750÷1100 Ω (at a temperature of approximately 25°C)



Downloaded from www.Manualslib.com manuals search engine

AIR FILTER REMOVAL

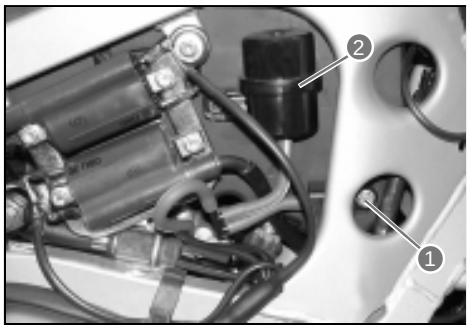

- Remove the seat.
- Remove the fuel tank as described in Chapter B.
- Remove the IAP sensor **1** from the filter and the suction extinguisher **2** from the left hand side of the machine.
- Remove the IAT air intake temperature sensor connector.

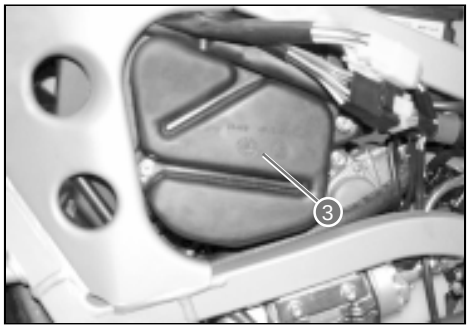

- Remove the Blow-by labyrinth **3** on the left hand side of the machine by unscrewing the two relative screws. Slacken the fastening of the sleeve and remove the labyrinth **3** from the filter.

This mechanism stops oil spray from the engine from entering directly into the air filter compartment.

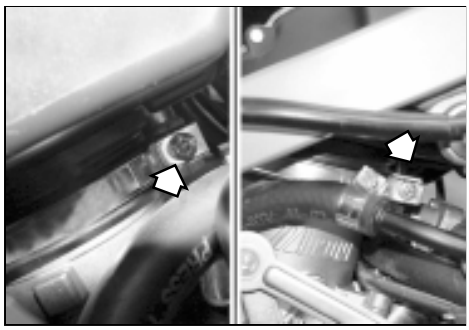

- Remove the filter compartment by loosening the two fasteners on the butterfly body as indicated in the figure.

Pay attention to the vapour discharge tube.

Downloaded from www.Manualslib.com manuals search engine

BUTTERFLY BODY

CONSTRUCTION

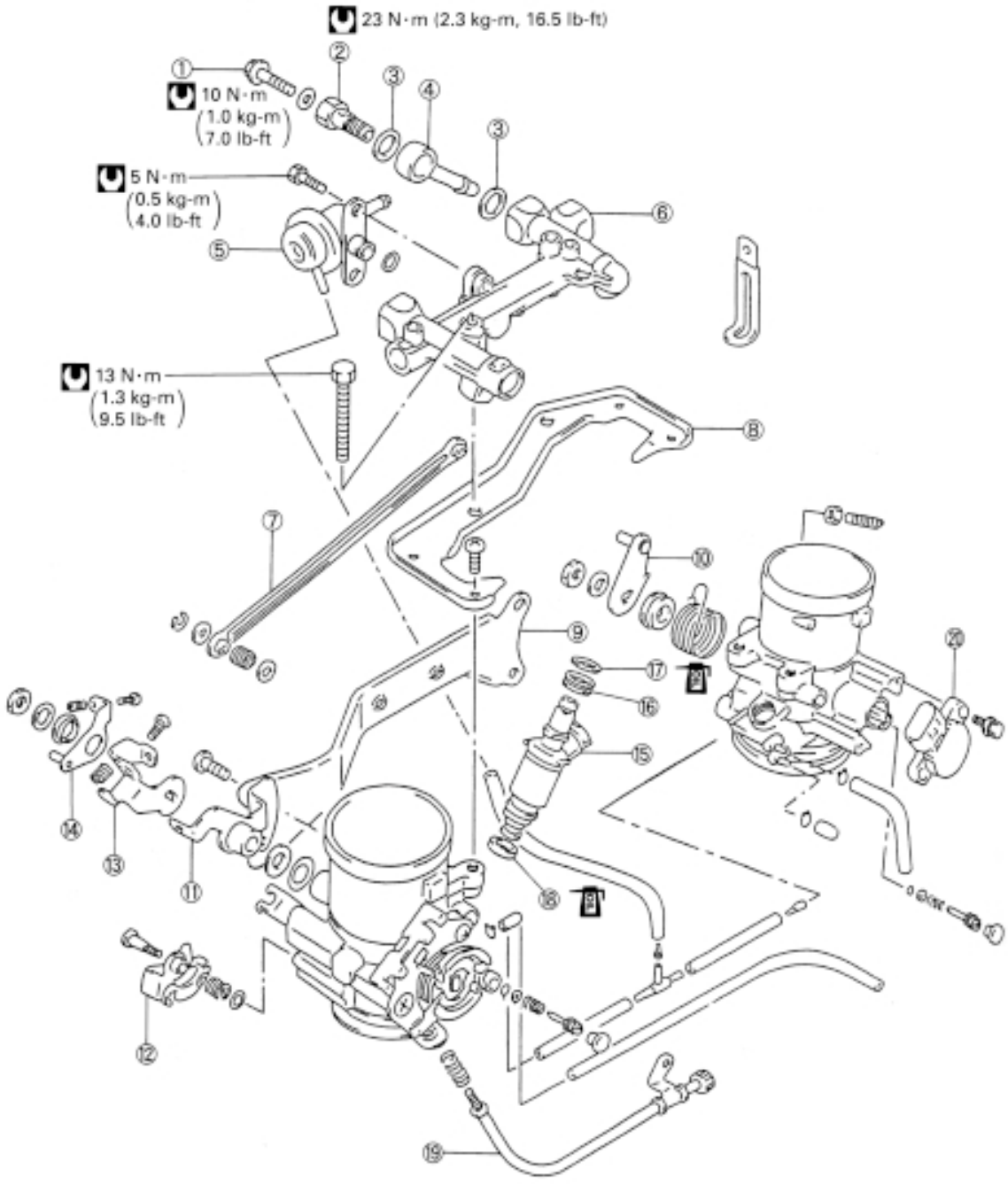

1 Fuel pressure control plug
2 Fuel tube union nut
3 Sealing washer
4 Incoming fuel tube union
5 Fuel pressure adjuster
6 Fuel feed tubing
7 Throttle lever connection rod
8 Fuel feed tubing support
9 Fuel connecting plate
10 Throttle lever N° 2
11 Throttle lever N° 1
12 Choke cam
13 Throttle balance lever
14 Butterfly valve shaft support
15 Injector
16 Dust protector
17 O-ring
18 Seal
19 Throttle stop screw
20 TP sensor

Downloaded from www.Manualslib.com manuals search engine

BUTTERFLY BODY REMOVAL

- Remove the air filter and other relative parts as described in Page C-49.
- Disconnect the suction tube from the three way union.
- Remove the left hand and right hand plastic protective covers of the fuel pump and the expansion tank.

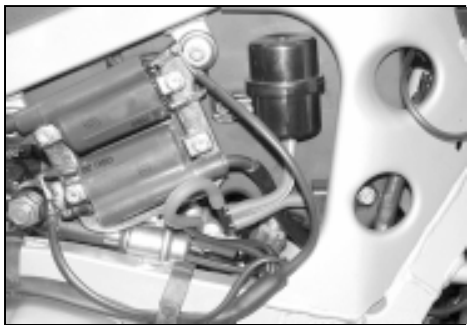

- Disconnect the incoming fuel tube by unscrewing the union fasteners as shown in the figure.

Place a cloth underneath the union.

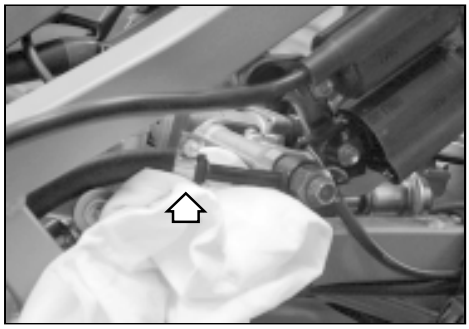

- Disconnect the connectors **1** and **2** of the injectors.
- Disconnect the connector of the TP sensor **3**.

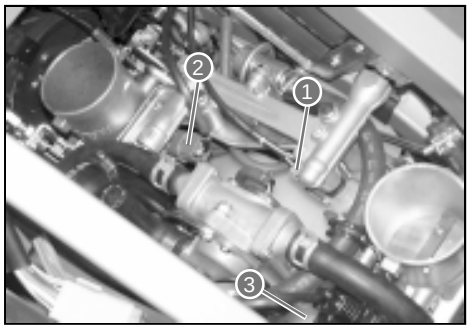

Disconnect the tubing from the cylinders **4** and the suction tubing **5** on the secondary air compartment.

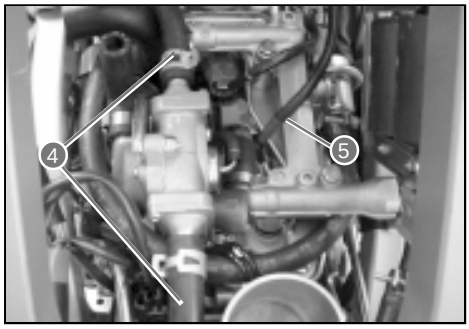

Downloaded from www.Manualslib.com manuals search engine

- Disconnect the throttle cables **1** and the choke cables **2** by loosening the relative locknuts.

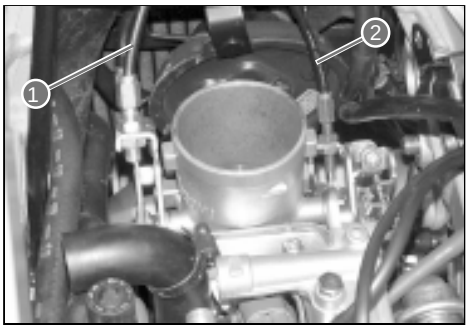

After having disconnected the throttle cables, do not completely open and completely close the butterfly valve. This could damage the valve and the body of the carburettor.

- Remove the engine support frame **3** by disassembling the following components:
- Remove the screw **4**.
- Loosen the screw **5**.

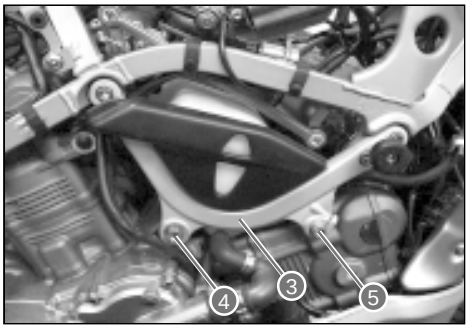

- Remove the two screws **6** paying attention to the nuts underneath.
- After having disassembled the anti-vibration support **7**, remove the screws **8**.
- Remove the engine support frame **3**.

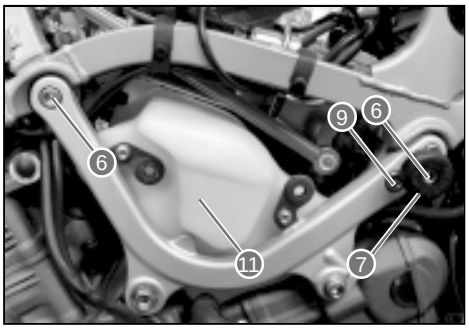

Pay attention to the spacer and the cable support that are freed during the removal procedure of the left hand engine support frame.

After having removed the sump guard as described in page B-7, drain the engine coolant into an appropriate container via the plug **9**.

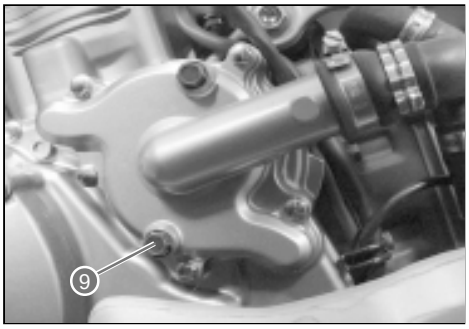

To assist the draining of the engine coolant, unscrew the expansion tank cap.

- Disconnect the three relative fasteners **10** and remove the sleeves on the expansion tank **11**. Two from the right hand side and one from the left hand side of the machine.

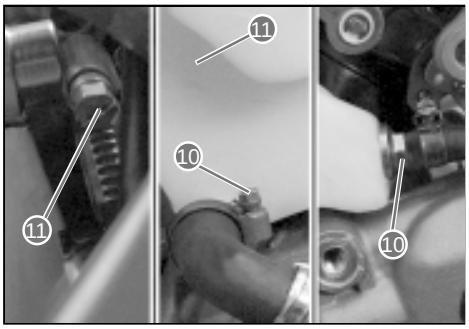

Downloaded from www.Manualslib.com manuals search engine

- Extract the expansion tank from the right hand side of the machine. This creates space in which the butterfly body can be removed more easily.

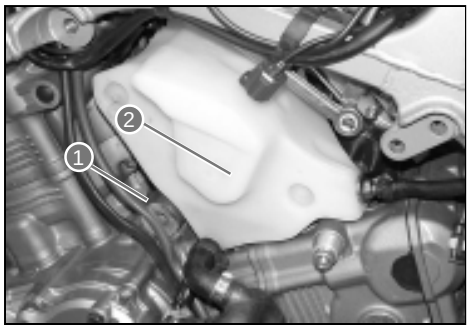

- Loosen the two fasteners on the collectors.

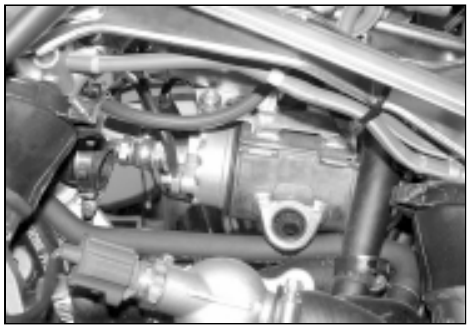

- Unscrew the screws **3** and free the choke adjuster support plate.

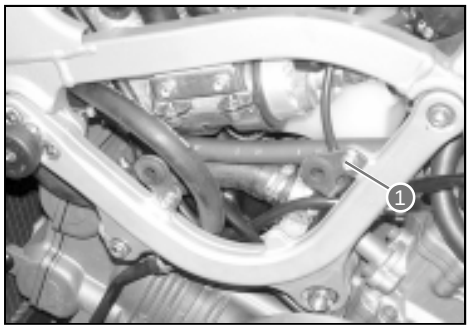

- Unscrew the screws **2** and remove the coil assembly from the frame.
  Extract the butterfly body assembly.

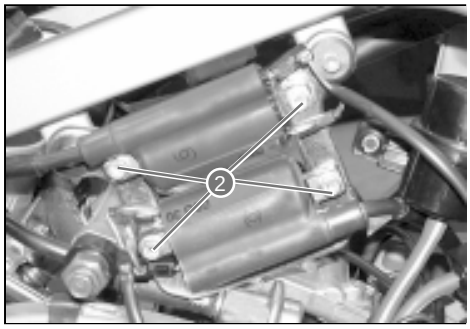

Downloaded from www.Manualslib.com manuals search engine

DISASSEMBLING THE CARBURETTOR

- Disconnect the suction tubes of the carburettor assembly.

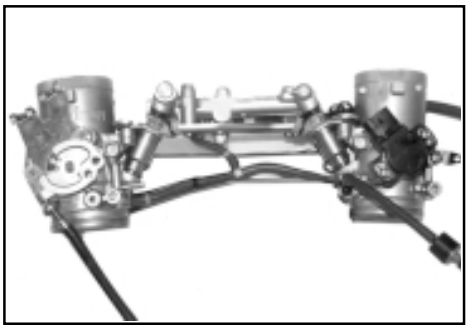

- Remove the TP sensor **1**.
- Remove the choke adjuster assembly **2**. Remove the throttle cable guide **3**.

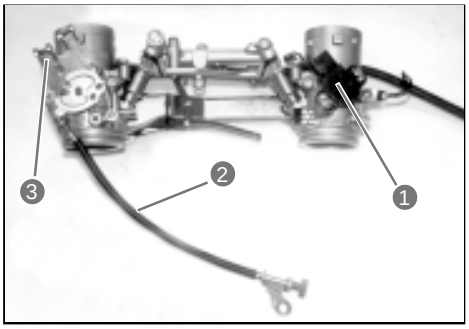

- Remove the fuel feed tubing **1** by removing the nuts.

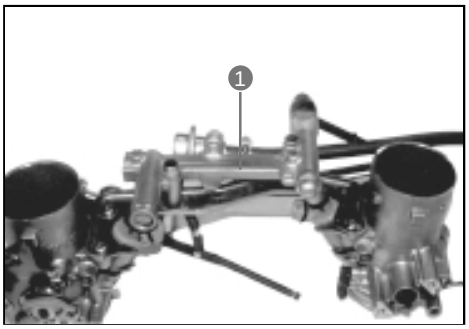

- Remove the fuel pressure adjuster **2** and the incoming fuel tube union **3** from the fuel feed tubing.

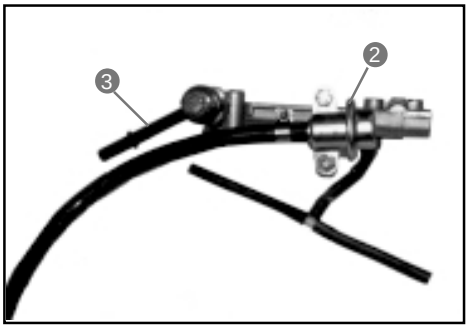

- Remove the fuel injectors **4** and **5**.

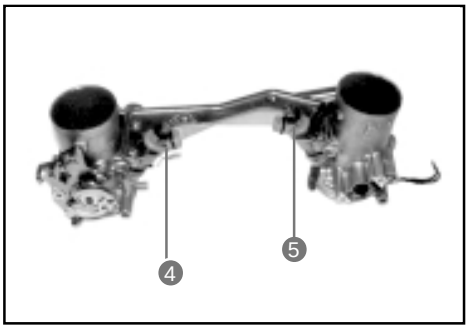

Downloaded from www.Manualslib.com manuals search engine

- Remove the injector seals **6**.

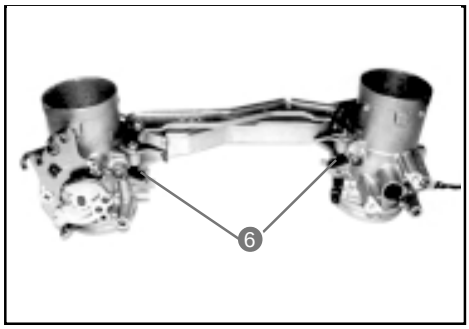

- Remove the fuel feed tubing support **7** by removing the screws.

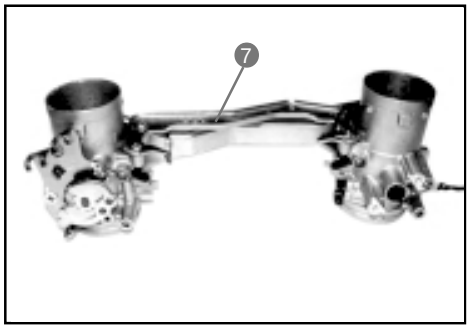

- Remove the N° 1 throttle lever **1** and the N° 2 throttle lever **2**. Remove the connection rod **3** by unscrewing the nuts.

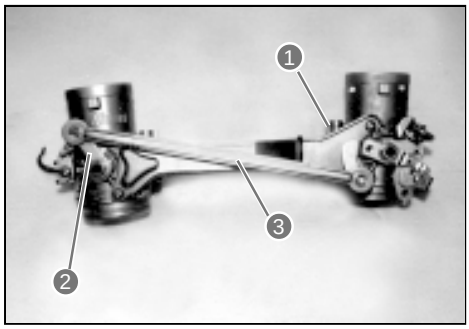

- Remove the spring stop **4**, the spring **5** and the ferrule **6**.
- Remove the washer **7** and the ferrule **8**.

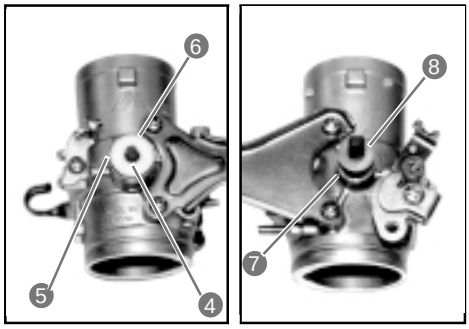

- Remove the connecting plate **9**, the choke cable guide **10** and the choke cam **11**.

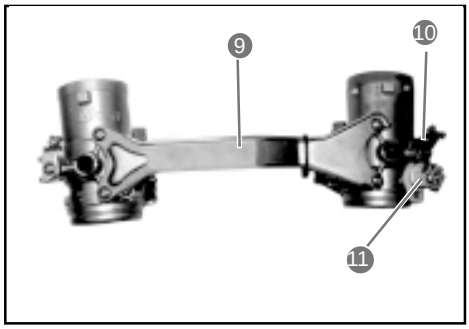

Downloaded from www.Manualslib.com manuals search engine

- Remove the carburettor air screw cap.
- Slowly rotate the air screw in a clockwise direction and count the number of turns necessary to gently screw in the air screw into its seat. Note the number of turns so that the screw can be replaced correctly after cleaning.

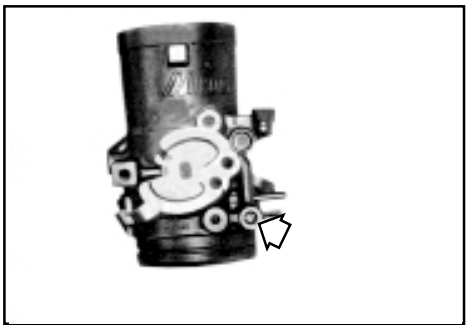

- Remove the air screw with the spring, washer and O-ring.



Downloaded from www.Manualslib.com manuals search engine

CLEANING THE CARBURETTOR

When cleaning carburettors, certain chemical products (especially liquids for immersing and cleaning carburettors) are extremely corrosive and therefore must be handled with great care. Always follow the manufacturer's instructions for use. Handle and store the products in the correct way.

- Clean all passageways with a carburettor cleaning spray and then dry with compressed air.

Do not use wire to clean the passageways. It could cause damage. If the components cannot be cleaned satisfactorily with a spray product, it may be necessary to use an immersion liquid. Always follow the manufacturer's instruction for use of the product and clean the components in the correct way. Do not clean rubber or plastic parts of the carburettor with cleaning products.

CHECK

Check the following parts for damage and blockage:

* Air screws
* Air by-pass passageway
* Ferrule and rod seal
* Butterfly valve
* Injector filter
* O-rings
* Injector seal
* Injector dust protector
* Suction tubes
* Jet

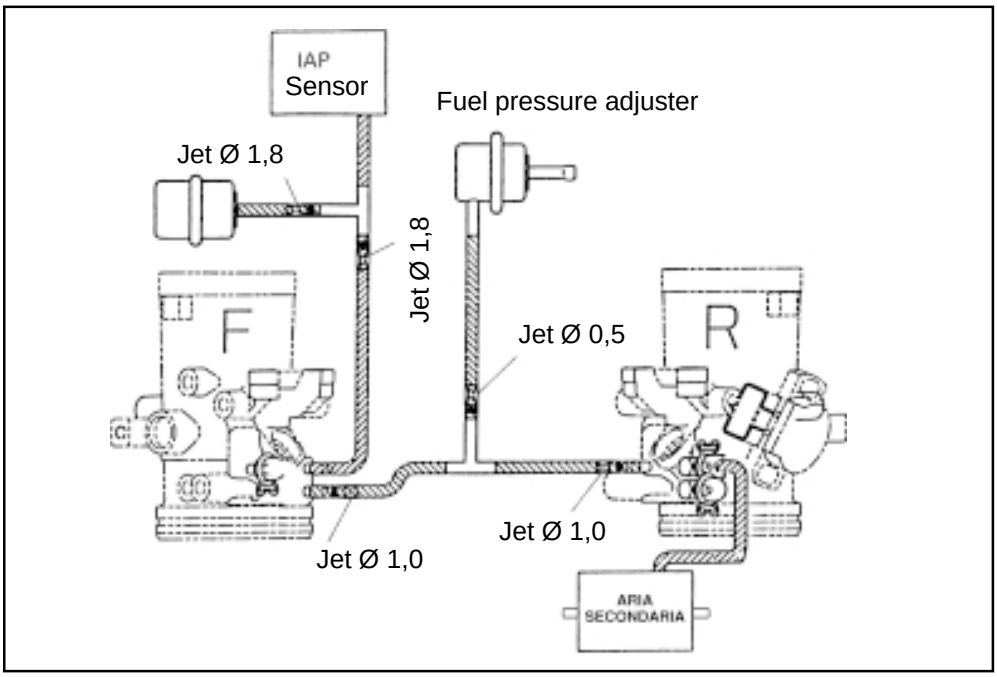

Downloaded from www.Manualslib.com manuals search engine

CARBURETTOR REASSEMBLY

- After cleaning the carburettor, replace the air screw in its original position by screwing in until it lightly rests on its seat. Then unscrew the number of turns noted during the removal.

Air screw standard adjustment: Approx. 1-1/2 turns backwards.

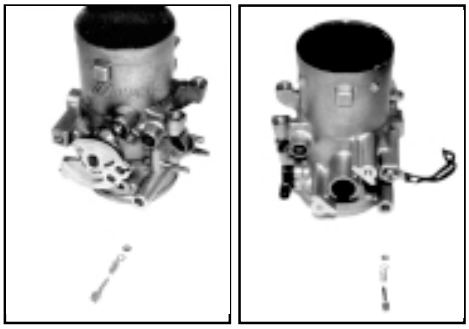

- Replace the air screw cap.

Substitute the O-ring.

- Replace the choke cable **1**.
- Replace the washer **2**, the spring **3**, the spring stop **4** and the choke cam **5**.

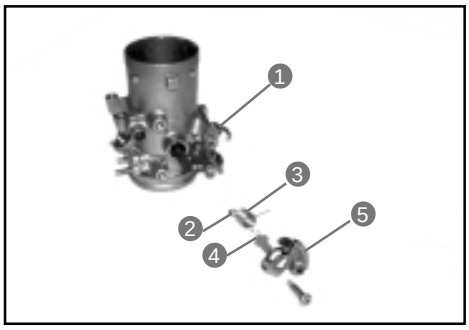

- Insert the clamp **A** of the suction tube in the correct way. (Model E-33)
- At the same time, replace the connecting plate **6**. (Lightly tighten plate screws)

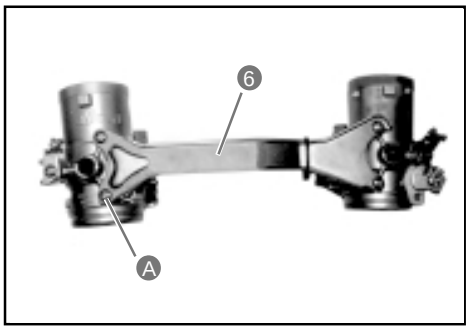

- Replace the ferrule **7** and the washer **8**.
- Replace the ferrule **9**, the spring **10**, and the spring stop **11**.

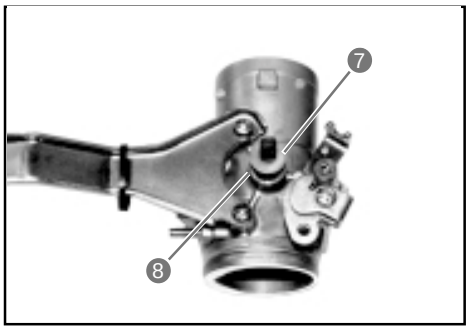

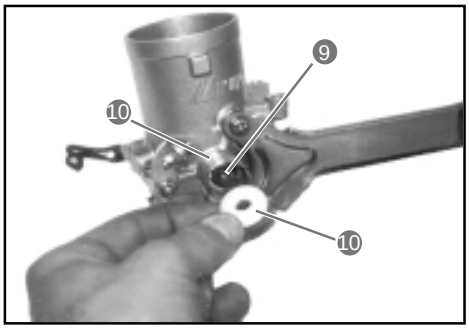

Downloaded from www.Manualslib.com manuals search engine

- Completely close the butterfly valve **1** on the rear carburettor and on the front carburettor.

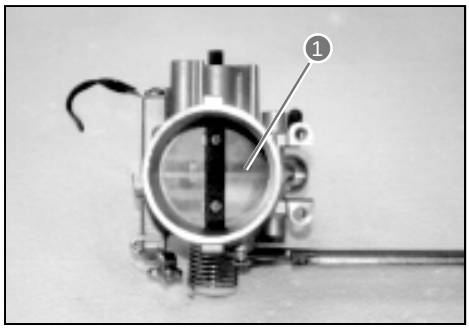

- Before replacing the N° 2 throttle lever, check the insertion of the ferrule **3**, the washer **4** and the spring **5**.

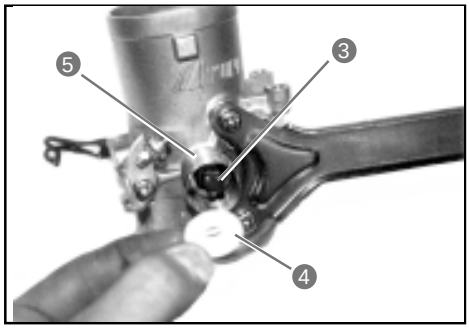

- Replace the N° 2 throttle lever **6** and hook the spring **A** to the N° 2 lever.
- Replace the elastic washer **7**.
- Tighten the nut **8**.

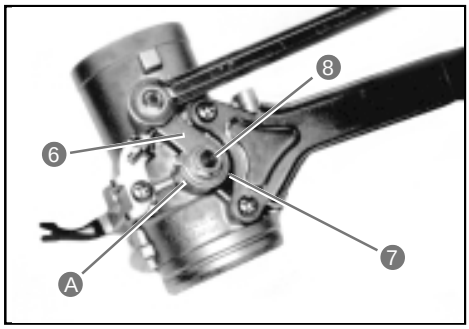

- Replace the N° 1 throttle lever **9** on the N° 1 butterfly valve spindle and then replace the ferrule **10** and the elastic washer **11**.
- Tighten the nut **12**.

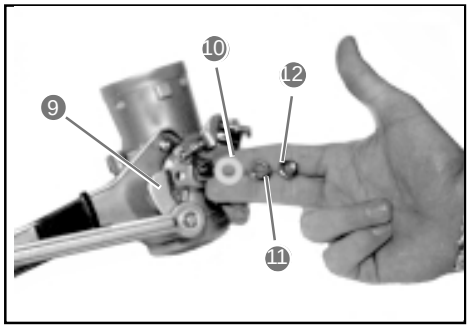

Downloaded from www.Manualslib.com manuals search engine

- Correctly replace the suction tube clamp **A**.
- Replace the fuel feed tubing support **1**.
- Tighten the connecting plate screws and the screws of the fuel feed tubing support.

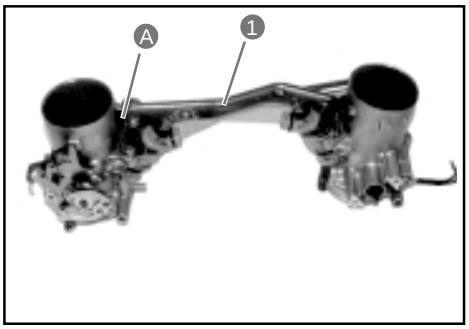

- Apply a thin layer of engine oil to the new injector seals **2** and replace them.

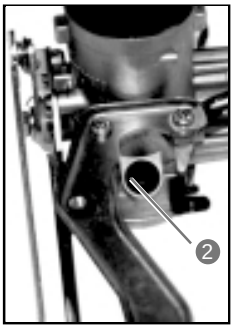

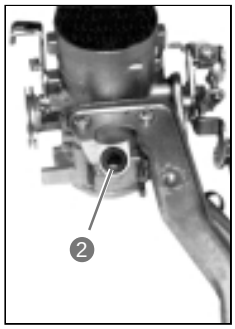

Substitute the seals with new ones.

- Replace the seals **3** and the O-rings **4** on the injectors.
- Apply a thin layer of engine oil to the new O-rings **4**.
- Replace the injectors, inserting them squarely into the carburettor.

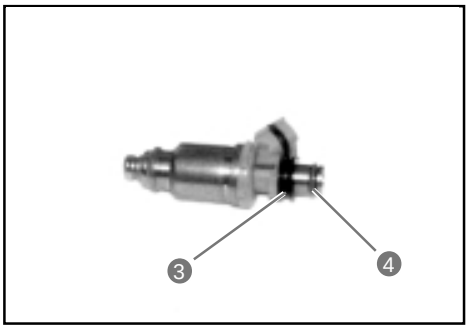

Substitute the seals and the O-rings with new ones.
Never rotate the injector when inserting it.

- Apply a thin layer of engine oil to the new O-ring **5** and insert it into the fuel pressure adjuster.

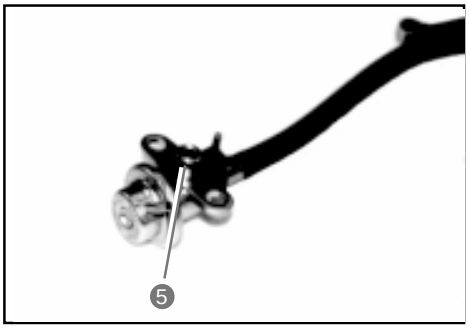

Substitute the O-ring with a new one.

- Replace the fuel pressure adjuster on the fuel feed tubing.

Torque pressure
Fuel pressure adjuster assembly nut: 5 Nm (0.5 kg-m)

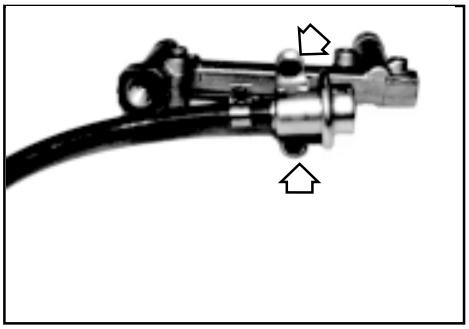

Downloaded from www.Manualslib.com manuals search engine

- Replace the incoming fuel tube joint **1** at the correct angle on the feed tubing.
- Tighten the joint nut of the incoming fuel tube to the specified torque.

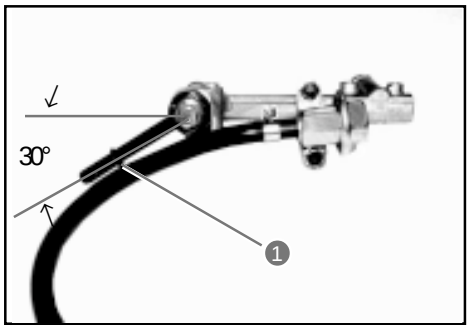

Torque pressure
Tube joint nut: 23 Nm (2.3 kg-m)

Replace and renew the sealing washers on both sides of the tube joint.

Use new washers to avoid fuel leakage.

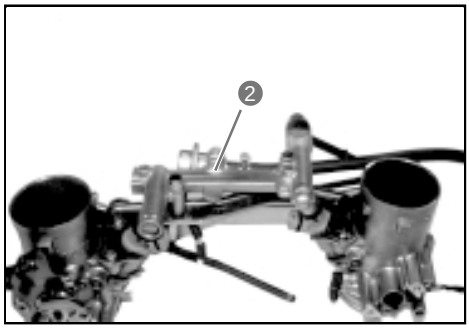

- Replace the fuel feed tubing **2** and tighten the nuts to the specified torque.

Torque pressure
Fuel feed tubing assembly nut: 13 Nm (1.3 kg-m)

- Replace the fuel return tube.

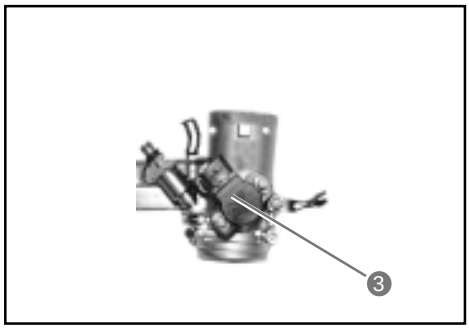

- Apply a thin layer of “A” grease to the seal **3** and replace it on the N° 2 butterfly valve spindle.

- Replace the TP sensor on the N° 2 butterfly valve spindle, aligning the tongue of the spindle with the groove **B** of the TP sensor. See page C-17 for the adjusting procedure of the TP sensor.

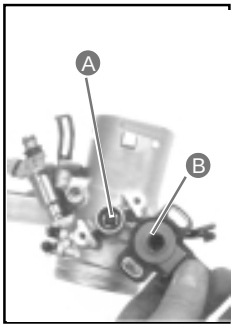



- Replace the throttle cable guide **5**.

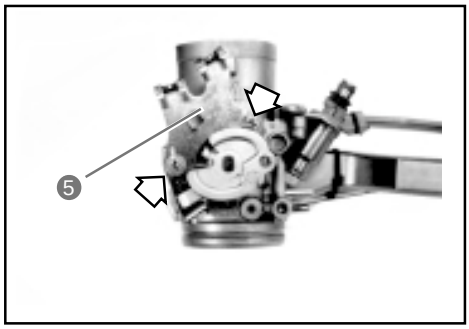

Downloaded from www.Manualslib.com manuals search engine

- Connect the suction tubes **1** of the three-way sensor **2** and the fuel pressure adjuster **3** as shown in the figure.

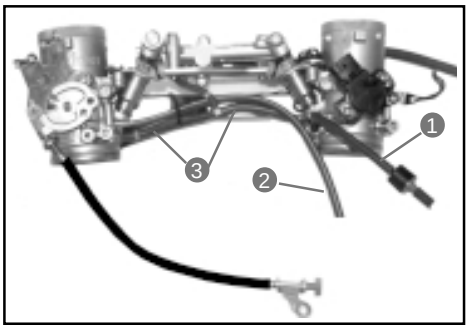

CARBURETTOR INSTALLATION

- Install the carburettor assembly and tighten the screws of the bands on the side of the air intake collectors.

During reassembly, pay attention to the correct positioning of the tubes and the cables.

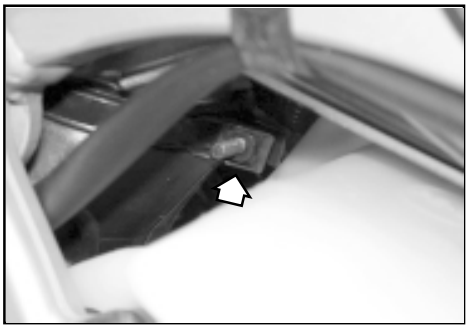

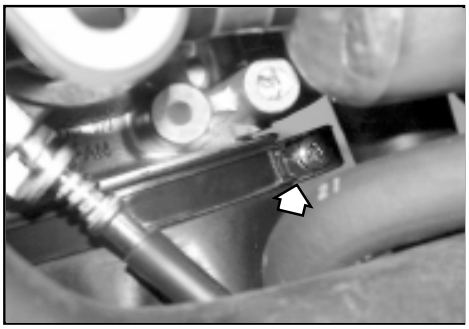

- Connect the traction cable **1** and the return cable **2** of the throttle to the butterfly valve cam.
- Adjust the throttle cable play with the lock adjusters **3** and **4**.
  See page C-73 for details.

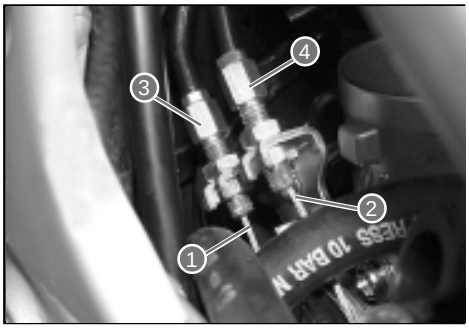

- Connect the choke cable and adjust the choke cam play by the lock adjuster **5**.
  See page C-73 for choke cable adjustment.



Downloaded from www.Manualslib.com manuals search engine

- Replace the support plate of the tickover adjustment using the mounting screw.

Torque pressure
Mounting nut: 23 Nm (2.3 kg-m)

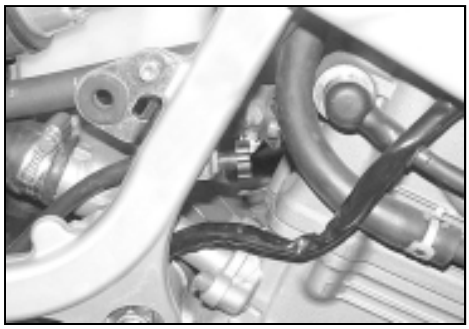

- Replace the complete T-shaped coil support.

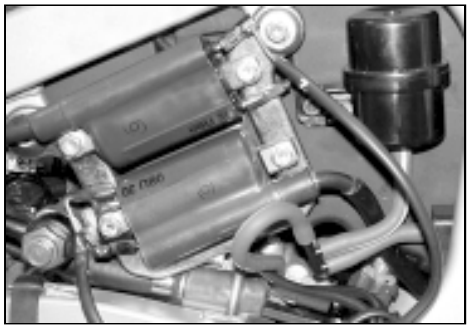

- Connect the injector couplings **2** and **3**.
- Connect the connector of the TP sensor **4**.

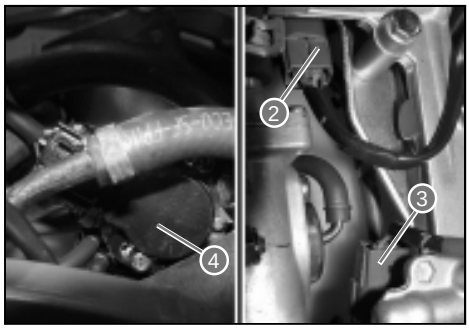

- Connect the suction tube from the rear butterfly body to the secondary air valve and the relative sleeves.

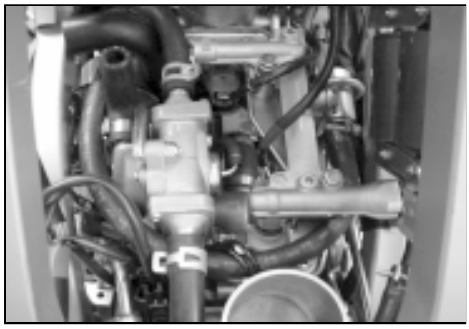

Downloaded from www.Manualslib.com manuals search engine

• Replace the expansion tank in the reverse order of removal.

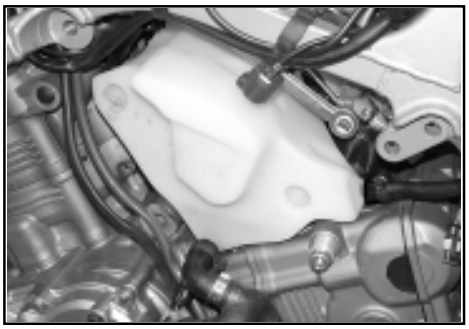

Carry out the bleeding of air of the cooling system as described in Chapter B.

• Assemble the engine support frames **3** and the relative screws, **4**, **5**, **6** and **7**. Tighten these screws to the following torque pressure.

Torque pressure
4= 40÷45 Nm
5= 45÷50Nm
6= 45÷50Nm
7= 45÷50Nm

Before tightening these screws, sustain the weight of the engine with a jack so that the screws and their seats are correctly aligned.

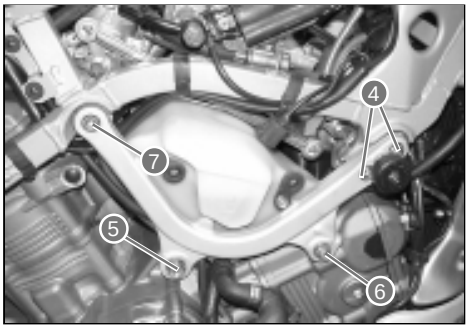

To assemble the left hand engine support frames, correctly replace the spacers and the cable support.

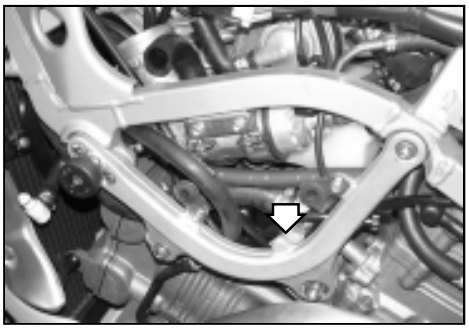

• Replace the incoming fuel tubing.



AIR FILTER ASSEMBLY

Reassemble the air filter in the reverse order of removal.
Tighten the two bands on the butterfly bodies.
Assemble the IAP sensor and the suction extinguisher, ensuring that there is a good electrical contact and a good insertion of the suction tube.
Connect the connector to the IAT temperature sensor.

During this phase, take care in inserting the tube onto the secondary air compartment. Replace the Blow-by labyrinth.

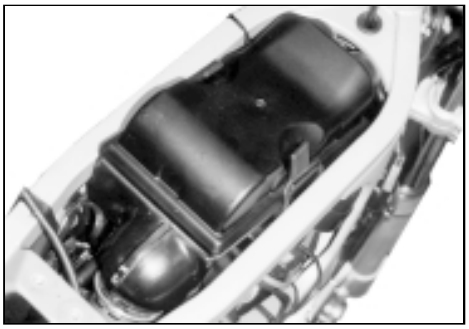

Downloaded from www.Manualslib.com manuals search engine

FUEL INJECTOR CHECK

The fuel injector must be checked without removing it from the carburettor.
See page C-49 for details.



FUEL INJECTOR REMOVAL

- Lift up and sustain the fuel tank with a suitable support.
- Remove the air filter compartment.
- Disconnect the negative cable of the battery. Disconnect the injector couplings.
- Disconnect the incoming fuel feed tube.
- Remove fuel feed tubing nuts.
- Remove the N° 1 and N° 2 injectors as described previously.

CHECK

Check to see if the injector filter is dirty. If necessary, check and clean the tubing and the fuel tank.

FUEL INJECTOR ASSEMBLY

- Apply a thin layer of engine oil to the new seals and O-rings of the injectors.
- Insert the injectors squarely into the carburettor. Never rotate the injector during insertion. (see page C-62).

AIR SCREW ADJUSTMENT

If it is necessary, adjust the butterfly valve synchronisation and the air screws according to the specification.

- Remove the right hand fuel tank as described in page B-4.
- Remove engine coolant cap union as indicated in the figure.
- Disconnect the rear cylinder secondary air valve tubing as indicated in the figure.
- Disconnect the rear cylinder secondary air valve tubing as indicated in the figure.
- Adjust the air screw **1** according to the specification utilising a screwdriver as indicated. Also adjust the air screw **2**.

Standard air screw adjustment: Approx. 1-1/2 a turn backwards.

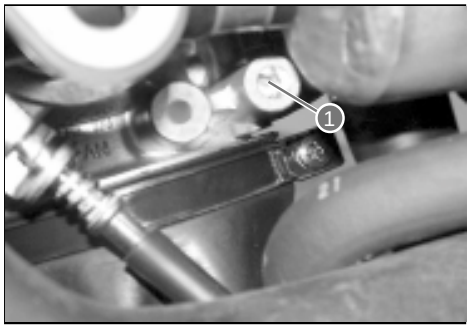

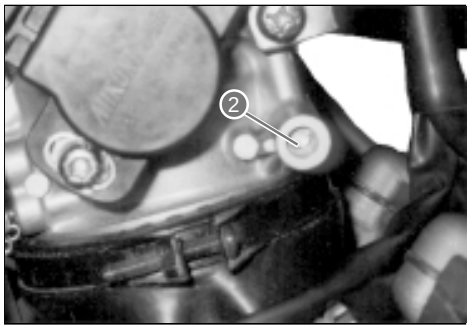

Do not excessively tighten the air screw.

Downloaded from www.Manualslib.com manuals search engine

CHOKE ADJUSTMENT

The choke is a cold start system that mechanically opens the butterfly valve by utilising a cam. The cam is made to rotate by the cable and it pushes the butterfly valve rod attachment. The butterfly valve therefore opens allowing the engine to turnover from cold at a maximum of 2000 rpm (20°÷30°).

- Connect the revcounter.
- Switch on the engine and let it turn over to heat it up
- Adjust the tickover to 1300÷1350 rpm.
- Completely rotate the choke lever **1** and check the rpm of the choke system. If the speed of the engine is not as specified, adjust to 2000 rpm as follows.
- Remove the left hand fuel tank as described in page B-4.
- Completely pull the choke cable and check that the cam **A** touches the stop **B**. If not, adjust with the cable lock adjuster **2**.
- Switch on the engine and completely rotate the choke lever **1**.
- Adjust the choke speed to 2000 rpm by rotating the choke screw adjuster **3**.
- After having adjusted the choke, adjust the tickover speed to 1300÷1350 rpm.

Choke rpm: 2000 rpm (cold engine 20°÷30°)
Tickover rpm: : 1300÷1350 rpm

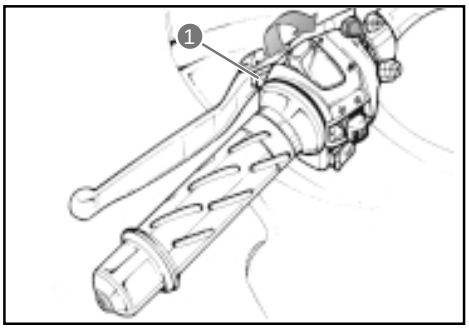

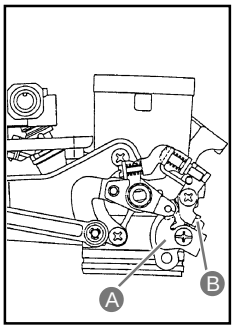

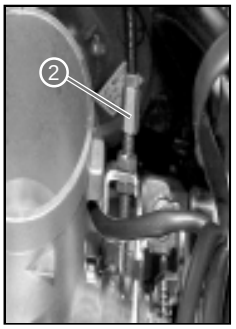

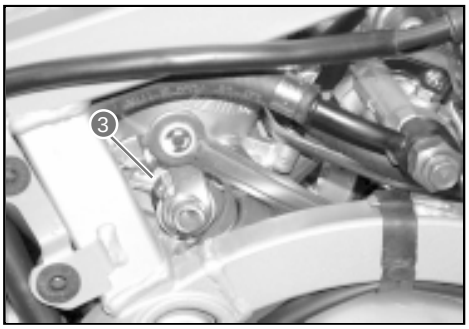

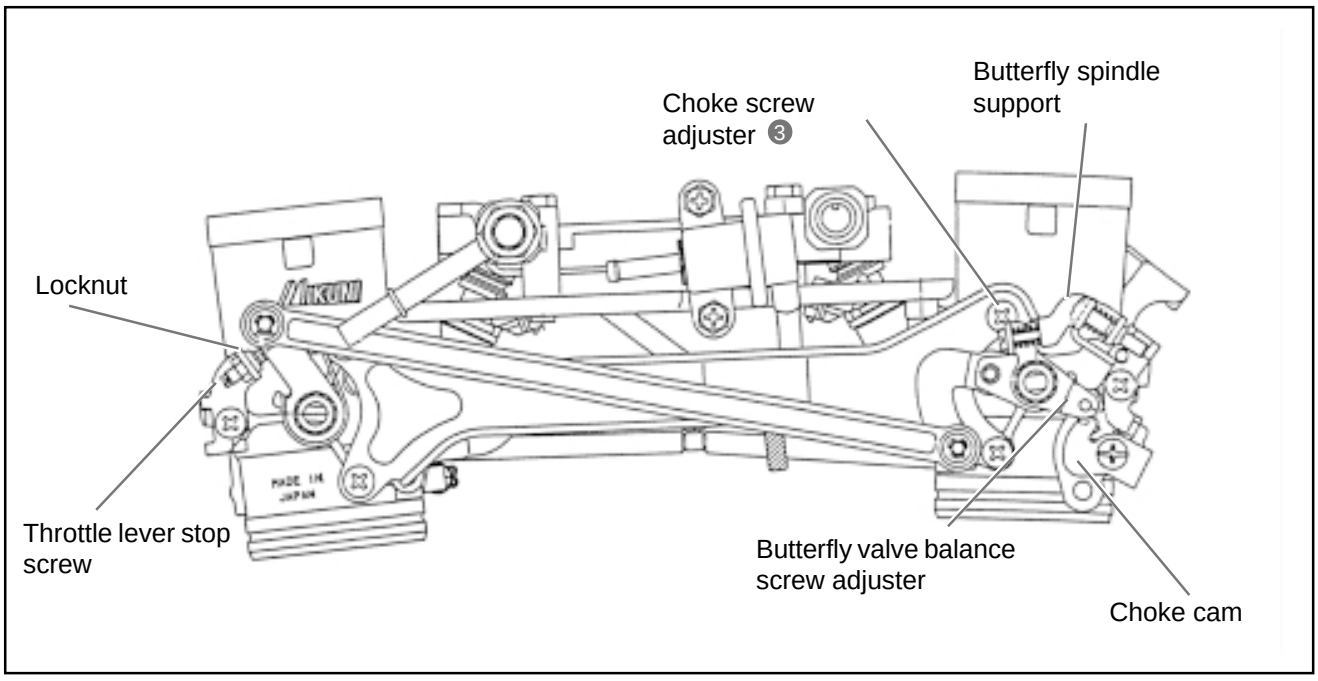

Downloaded from www.Manualslib.com manuals search engine

CARBURETTOR SYNCHRONISATION

Check and adjust the butterfly valve synchronisation of the front and rear cylinders.

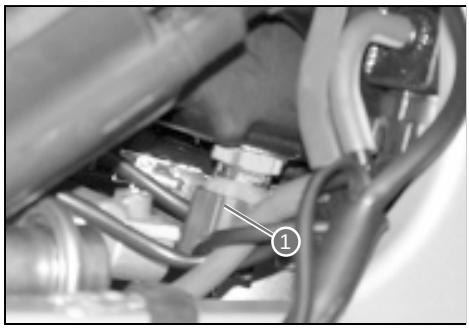

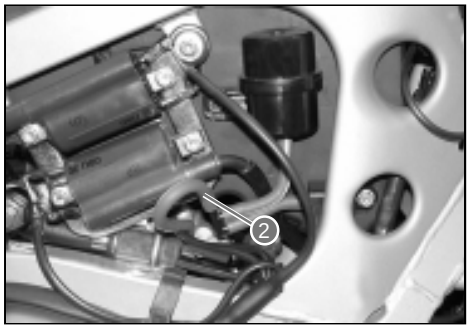



CALIBRATION ACCESSORY

- Remove the right hand fuel tank.
- Switch on the engine and let it run for several minutes to warm up.
- Switch off the engine when it is hot.
- Remove the air filter compartment (see page C-51).
- Disconnect the connector of the IAT sensor **1** and remove the IAT sensor from the air filter compartment.
- Connect the IAT sensor to its coupling and place it on the frame.
- Disconnect the suction tube **2** from the three way union.
- Disconnect the suction tube **3** from the secondary air compartment.
- Connect the rubber tube of the front butterfly body to the balancing accessory.
- Install the appropriate plug into the suction tube **3** of the secondary air compartment.

Special tool: 800097957: Suction balancing accessory.

The dimensions of each nipple are different and it is therefore necessary to have a nipple adaptor for each nipple. To adapt to the dimensions, use the two tubes utilised for the carburettors of the NAVIGATOR 1000 on the three-way connector of the fuel pressure adjuster. The two tubes contain a 1.0 mm diameter jet that apply a measured suction to the accessory. These two tubes are connected to the accessory tube for the balancing of the suction by an appropriate joint as illustrated.

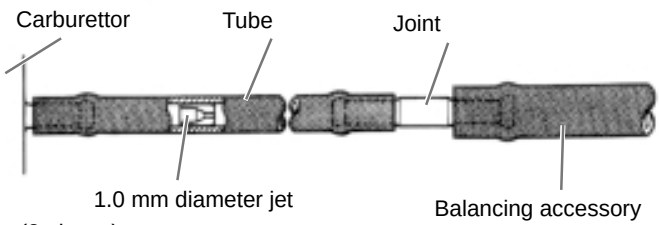

Tube (2 pieces)
Jet diameter (2 pieces)

* Insert the jet into the tube and connect the balancing accessory tube using a joint of the appropriate dimension.

Downloaded from www.Manualslib.com manuals search engine

- Connect a revcounter.
- Switch on the engine and let it tickover at 1300 rpm by utilising the throttle stop screw **1**.

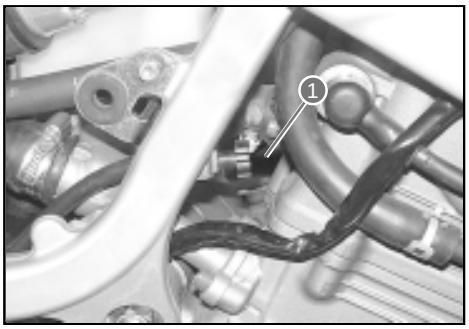

When the carburettor is without the air filter compartment, make sure that no foreign bodies enter the engine. Such material could damage the internal parts of the engine.

- Rotate the air screw **2** of the balancing accessory so that the suction that acts on the tube pulls the steel sphere **3** in the tube onto the central line **4**.

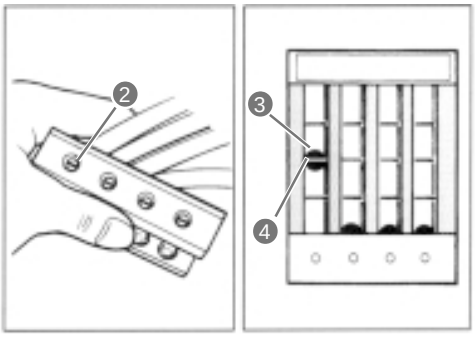

The balancing accessory must be positioned at approximately 30° from horizontal.

- After confirming that the sphere remains steady on the central line, disconnect the tube from the nipple of the front carburettor and connect the following tube to the same nipple.
- Rotate the air screw to bring the sphere **5** onto the central line.

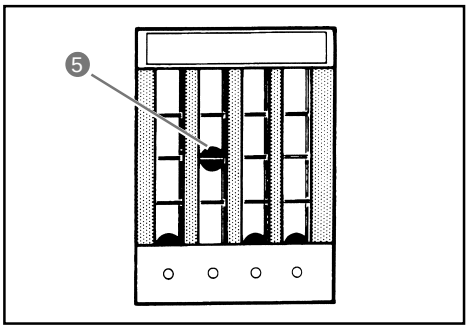

The balancing accessory is now ready for the balancing of the butterfly valves.

BUTTERFLY VALVE SYNCHRONISATION

- To synchronise the butterfly valves, remove the rubber caps from each suction nipple and connect the balancing accessory tubes.

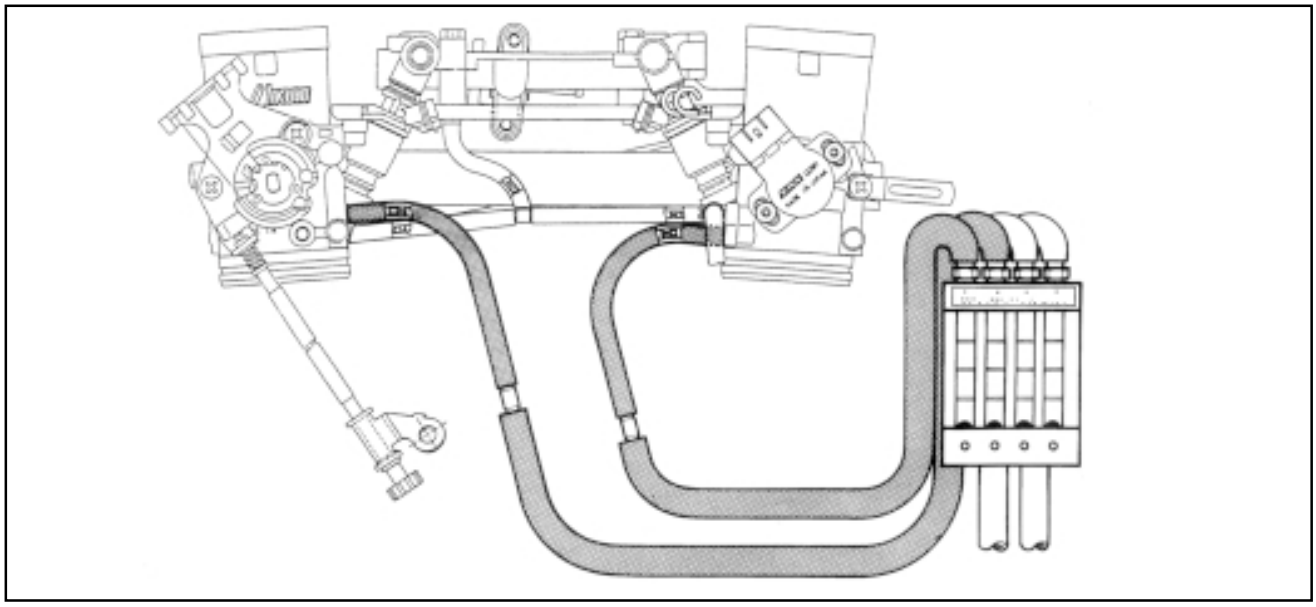

Downloaded from www.Manualslib.com manuals search engine

- Connect a revcounter and switch on the engine.
- Utilising the throttle stop screw, turn the engine over at 1300 rpm.
- Check the suction of the two cylinders and balance the two butterfly valves.

The balancing accessory must be positioned approximately 30° from the horizontal plane. In this position, the two spheres must be situated not more than a sphere's diameter from each other. If the distance is more than a diameter, rotate the air screw on the carburettor to bring the spheres to the same level.

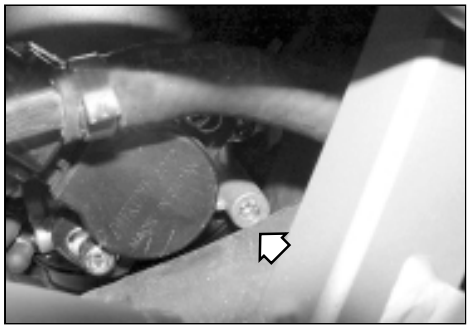

Check that there is a space between the throttle lever and the throttle lever stop screw during the synchronisation procedure.

When the suction difference is small (less than 20 mmHg – approximately the diameter of a sphere), use the air screw to balance the suction. The standard adjustment of the air screw is 1-1/2 a turn backwards from the fully screwed in position. After having balanced the butterfly valves, adjust the engine tickover to 1300 rpm using the throttle stop screw. This must be done after replacing the air filter compartment.
When the difference in the suction is large, use the balancing screw of the butterfly valve to balance the two valves.

Whilst balancing the butterfly valves, the engine must always turn over at 1300 rpm, using the throttle stop screw. Utilise the balancing screw of the butterfly valves for major adjustments and the air screw for fine adjustments.

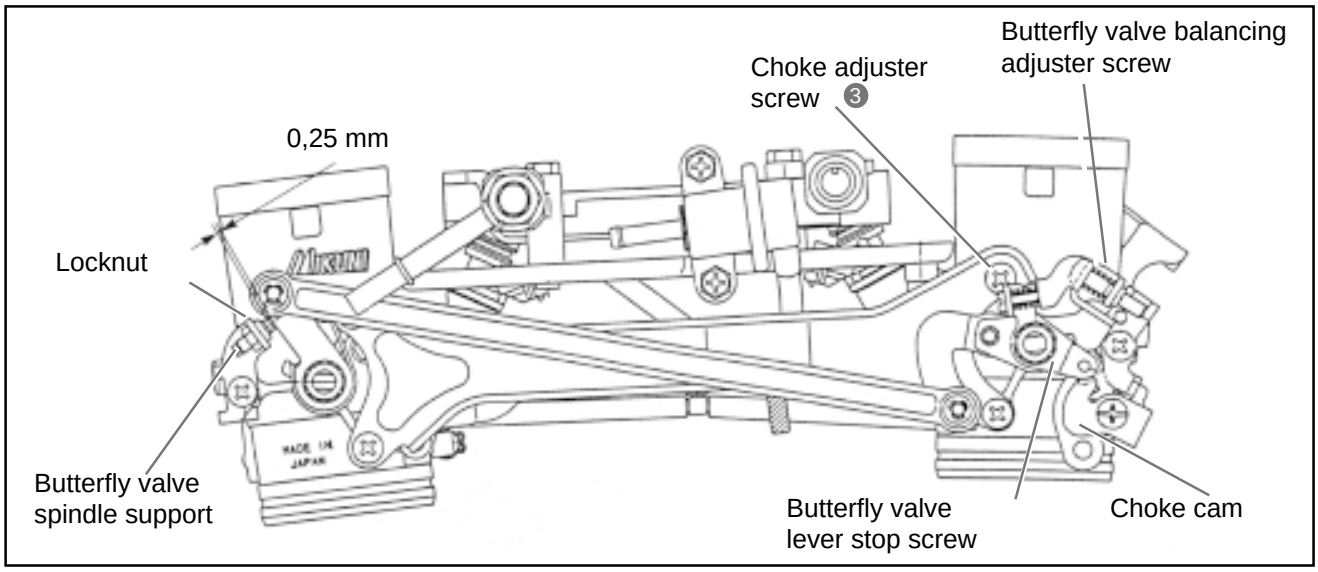

Downloaded from www.Manualslib.com manuals search engine

THROTTLE LEVER PLAY

After synchronising the butterfly valves and adjusting the tickover, check that the play **A** between the throttle lever **1** and the stop screw 2 is 0.25 mm.

If not, adjust the play **A** as follows.

- Slacken the locknut **3** and tighten or loosen the screw **2** to obtain a play **A** of 0.25 mm.
  This screw regulates an excessive butterfly valve movement.

Throttle lever play: 0.25 mm

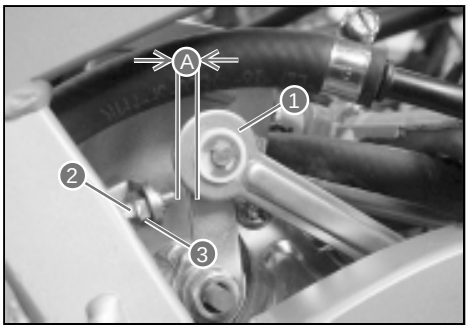

THROTTLE POSITION SENSOR ADJUSTMENT (TPS)

After making all necessary adjustments, check and adjust if necessary, the TPS sensor setting.

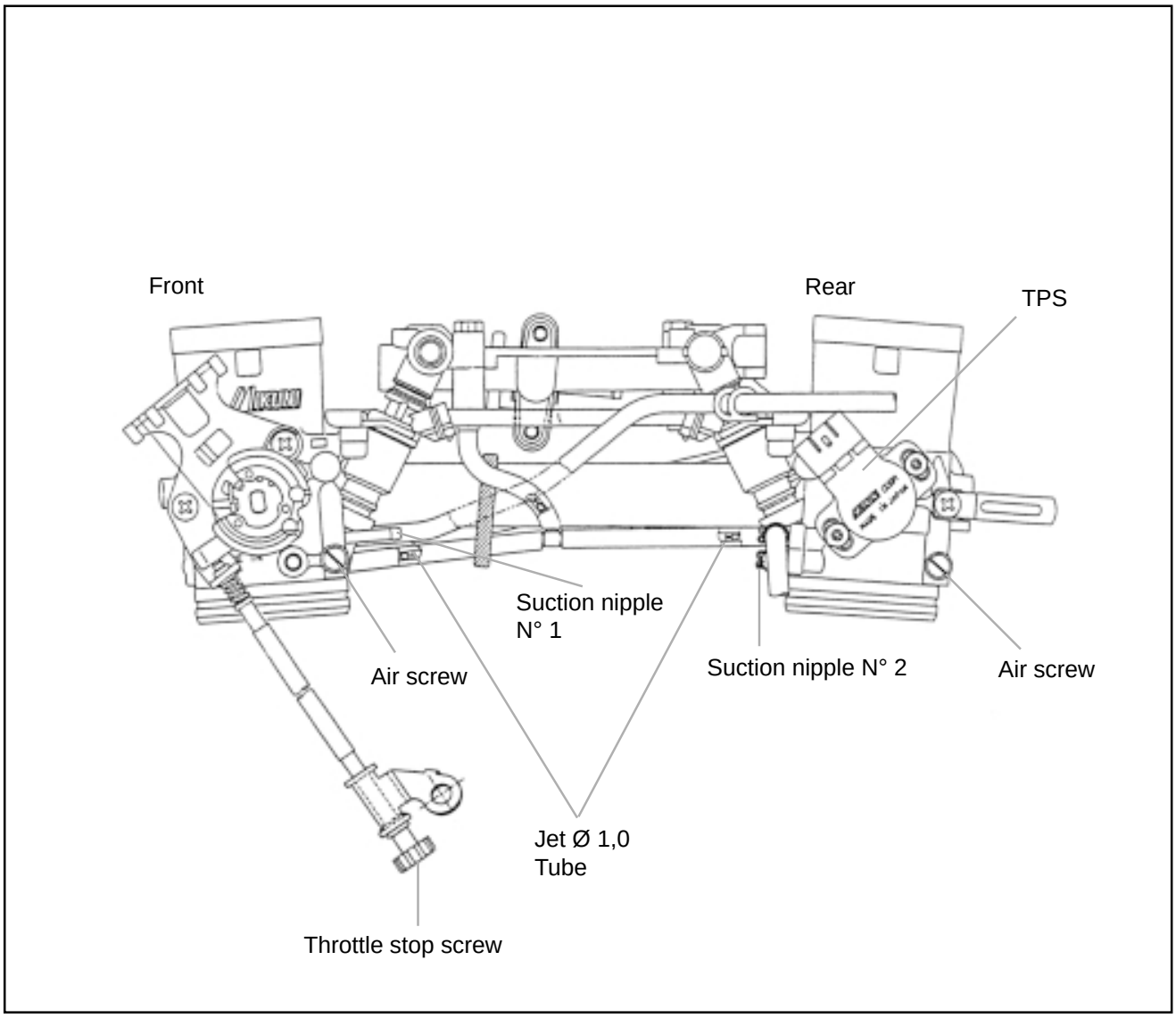

Downloaded from www.Manualslib.com manuals search engine

THROTTLE CABLE ADJUSTMENT

Fine adjustments can be carried out by using the screw adjuster on the throttle handgrip (see Chapter B).

MAJOR ADJUSTMENTS

- Remove the fuel tank as described in pages B-4 and B-6.
- Remove the air filter compartment. (See page C-51.)
- Slacken the locknuts **1** of the throttle return cable **2**.
- Turn the return cable screw adjuster **3** to obtain the correct cable play.
- Slacken the locknuts **4** of the throttle traction cable **5**.
- Screw or unscrew the traction cable screw adjuster **6** until 2.0-4.00 mm of play is obtained at the throttle handgrip.
- Tighten the locknut **4** whilst keeping the adjuster **6** still.
- Keep the throttle handgrip in the closed position and slowly turn the return cable screw adjuster **3** to obtain a slack of 1.0 mm.
- Tighten the locknut **1**.

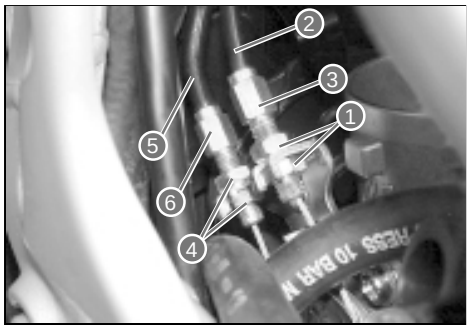



CHOKE CABLE ADJUSTMENT

- Remove the fuel tank as described in Chapter B.
- Remove the air filter compartment.
- With the choke cable completely pulled tight, check that the cam **A** is in contact with the stop **B**.
- Slacken the locknuts **1** of the cable **2**.
- Turn the screw adjuster **3** until the cam **A** comes into contact with the stop **B**.
- Tighten the locknuts **1**.

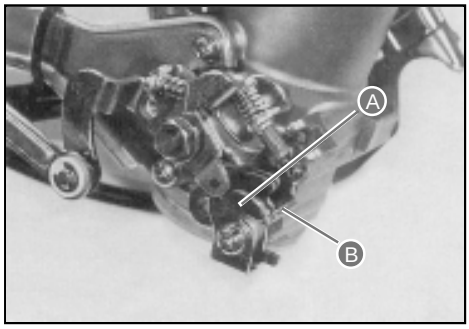

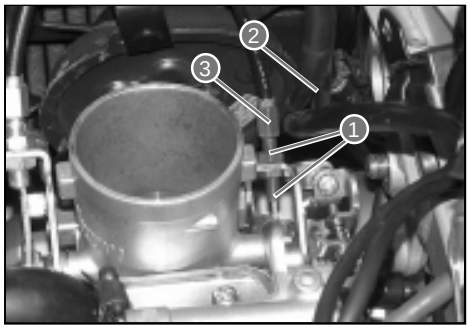

Downloaded from www.Manualslib.com manuals search engine

SENSORS

IAP SENSOR CHECK

The air intake air pressure sensor is situated on the right hand side of the air filter compartment.



IAP SENSOR REMOVAL/REASSEMBLY

- Remove the right hand fuel tank.
- Remove the fixing screws of the IAP sensor **1** and disconnect the coupling **2**.
- Reassembly is carried out in the reverse order of removal.

TP SENSOR CHECK

The throttle position sensor is situated on the N° 2 carburettor.

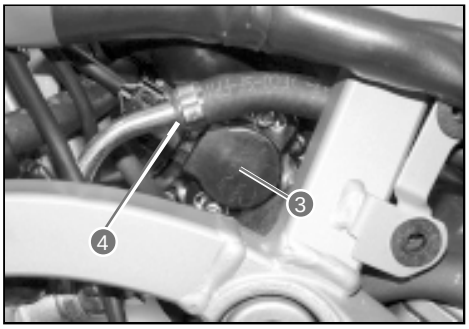

TP SENSOR REMOVAL/REASSEMBLY

- Remove the fuel tank.
- Remove the fixing screws of the TP sensor **3** and disconnect the coupling **4**.
- Reassemble the TP sensor on the N° 2 butterfly valve rod, aligning the tongue **A** with the groove **B** of the TP sensor. See page C-17 for the adjustment procedure of the TP sensor setting.

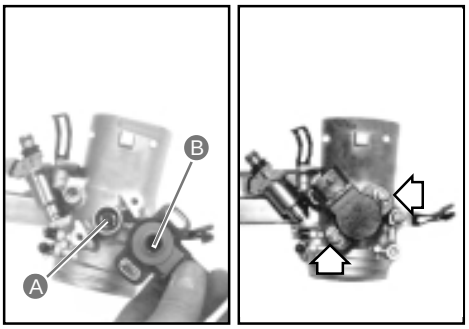

CKP SENSOR CHECK

The signal generating rotor is mounted on the extreme left of the crankshaft and the crankshaft position sensor (explorer coil) is situated inside the generator cover.

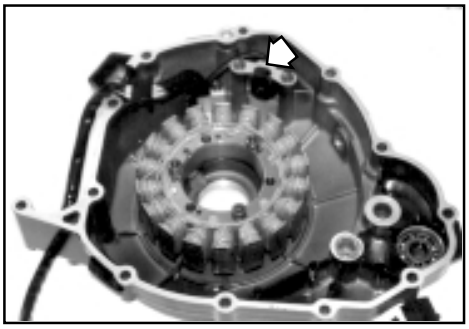

CKP SENSOR REMOVAL/REASSEMBLY

See page C-18.

CMP SENSOR CHECK

The signal generating rotor is mounted on the N° 2 intake camshaft and the camshaft position sensor (explorer coil) is situated inside the N° 2 cylinder head valve cover.

CMP SENSOR REMOVAL/REASSEMBLY

- Remove the right hand cover.
- Disconnect the connectors and remove the two screws of the sensor.

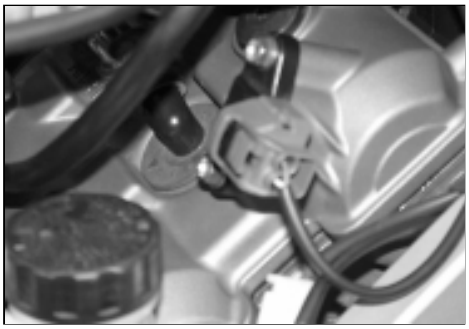

Downloaded from www.Manualslib.com manuals search engine

IAT SENSOR CHECK

The air intake air temperature sensor is situated on the front part of the air filter compartment.

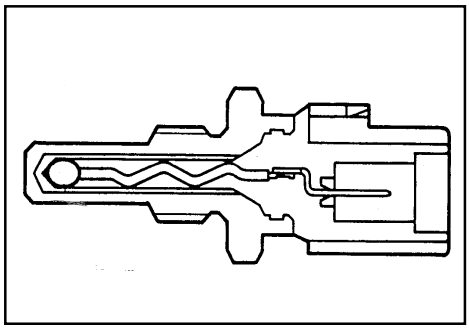

IAT SENSOR REMOVAL/REASSEMBLY

- Remove the fuel tank.
- Disconnect the IAT sensor coupling **1** and remove the IAT sensor from the air filter compartment.
- Reassembly is in the reverse order of removal.

Torque pressure
IAT sensor: 18 Nm (1.8 kg-m)

ECT SENSOR CHECK

The engine coolant temperature sensor is situated on the body of the thermostat unit.

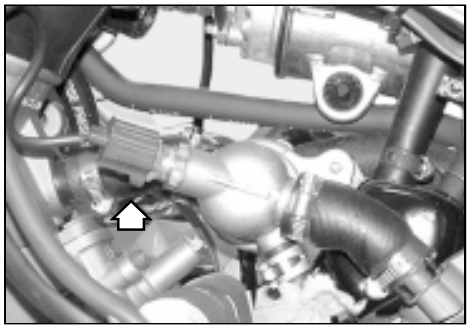

ECT SENSOR REMOVAL/REASSEMBLY

- Remove the fuel tanks as described in page B-4.
- Disconnect the electrical connection.
  Remove the ECT sensor.

AP SENSOR CHECK

The atmospheric pressure sensor is situated in the compartment underneath the seat.

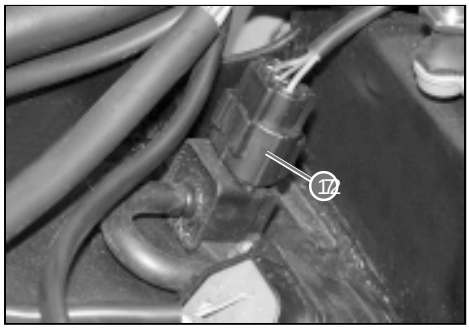

AP SENSOR REMOVAL/REASSEMBLY

- Remove the seat.
- Remove the bottom panel as described in Chapter B.
- Remove the ECM control unit support.
- Disconnect the coupling **1** and remove the AP sensor from the frame.
- Reassembly is in the reverse order of removal.

TO SENSOR CHECK

The crash sensor is situated underneath the rear cover.

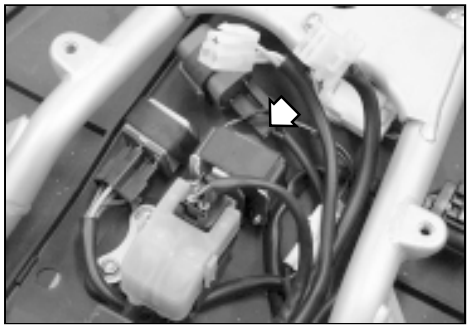

TO SENSOR REMOVAL/REASSEMBLY

- Remove the rear cover as described in Chapter B.
- Disconnect the coupling and remove the TO sensor from the frame.
- Reassembly is in the reverse order of removal.

Reassemble the TO sensor with the inscribed word “UPPER” uppermost.

Downloaded from www.Manualslib.com manuals search engine

Downloaded from www.Manualslib.com manuals search engine

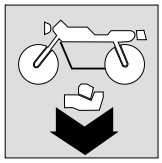

Section **D**

Downloaded from www.Manualslib.com manuals search engine

Camshaft/Cylinder head D-81
Cylinder/Piston D-105
Clutch D-114
Water pump/Clutch cover D-123
Primary driving gear/Valve motion idler gear shaft/sprocket no. 1 ..... D-129
Starting system/Generator/Crankshaft position sensor D-134
Gear preselector D-143
Crankcase/Gearbox/Crankshaft/Connecting rod D-151
Engine lubrication system D-169

Downloaded from www.Manualslib.com manuals search engine

ENGINE COMPONENTS THAT CAN BE REMOVED WITHOUT REMOVING THE ENGINE

The parts listed below can be removed and reinstalled without removing the engine from the chassis. Refer to the pages shown next to each item for information on the removing and installing procedures.

ENGINE LEFT SIDE

PARTS	REMOVAL	INSTALLATION
Gear change lever and preselector	D-144	D-148
Engine sprocket	D-8	D-17
Speed sensor rotor	D-7	D-17
Clutch throw-out	D-7	D-18
Generator	D-135	D-141

ENGINE RIGHT SIDE

PARTS	REMOVAL	INSTALLATION
Clutch	D-115	D-119
Primary driving gear	D-116	D-119
Oil pump driving and driven gears	D-32	D-51
Water pump	D-124	D-127
Primary driving gear	D-130	D-133
No. 1 valve motion idler gear/sprocket	D-130	D-133
Neutral switch	D-32	D-50
Sump oil filter	D-172	D-174
Oil pressure regulator	D-172	D-174
Oil pressure switch	D-175	D-176

ENGINE CENTRAL PART

PARTS	REMOVAL	INSTALLATION
Carburettors	C-59	C-63
Cylinder head covers	D-21	D-79
Camshafts	D-88	D-102 -103
Cylinder heads	D-88 -107	D-112 -113
Cylinders	D-106 -107	D-112 -113
Pistons	D-106 -107	D-112 -113
Timing chain tension adjusters	D-25	D-68 -71
Timing chain stretchers	D-22 -26	D-65
Timing chain guide	D-23 -27	D-62
Thermostat	H-13	H-14
Oil filter	B-13	B-13
Oil cooler	D-8	D-17
Starter motor	G-15	G-16

CONTENT

ENGINE PARTS THAT CAN BE REMOVED WITHOUT REMOVING THE ENGINE D-3

REMOVING AND INSTALLING THE ENGINE D-4

DISASSEMBLING AND REASSEMBLING THE ENGINE D-20

Downloaded from www.Manualslib.com manuals search engine

REMOVING AND INSTALLING THE ENGINE

REMOVING THE ENGINE

Before removing the engine from the frame, wash it with a steam cleaner or other suitable equipment. The engine removing procedure is described below and installation is obtained by following the same steps in reverse order.

- Remove saddle **1**.
- Remove the right hand side cover as described in Page B.11.
- Disconnect the positive terminal of the cable from the battery.

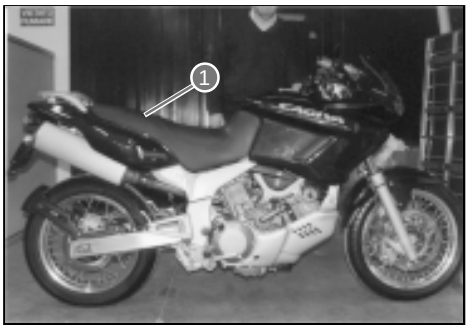



- Remove fuel tank (see page B.4).
- Remove oil drain plug **2** and drain the engine oil (see page B-16).

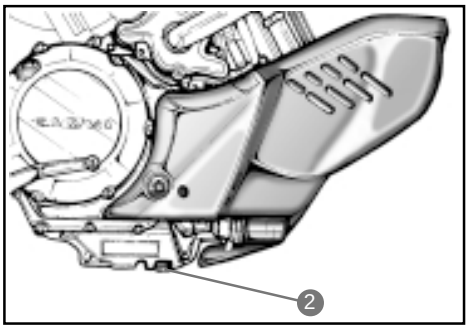

- Remove radiator cap **3** and coolant drain plugs **4, 5** and **6**, and then drain the coolant.

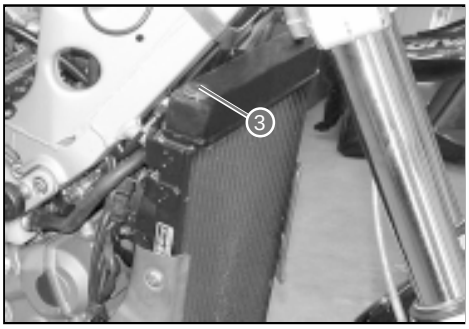

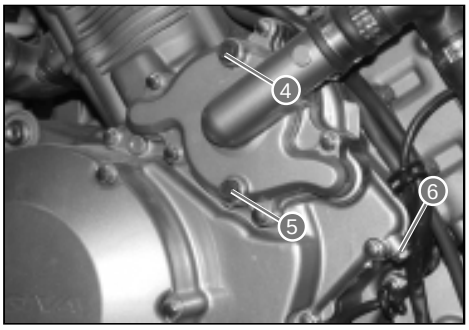

*** To avoid severe burns caused by the hot liquid or steam, do not open the radiator cap when the engine is hot.**
*** The coolant is harmful if swallowed or through contact with the eyes or the skin. Should the liquid come into contact with the eyes or the skin, rinse generously with water. In case of ingestion, cause vomiting and immediately seek medical attention.**

Downloaded from www.Manualslib.com manuals search engine

- Remove the air filter and its various components (see page C.51)

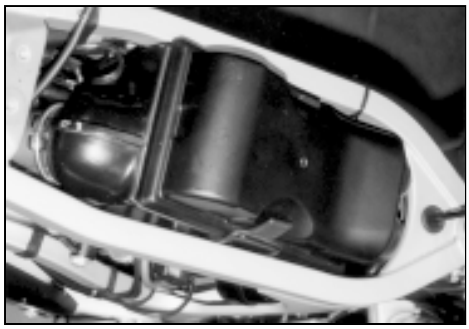

- Remove the engine support frames **1** and **2** as described in page C.54.

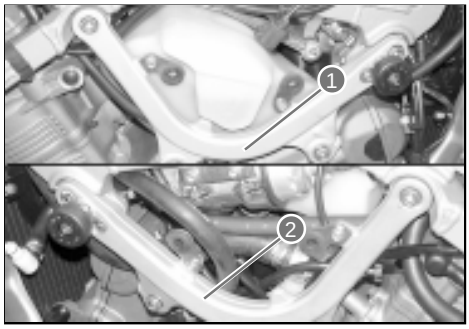

- Remove the engine coolant expansion tank as described in page C.55.
- Remove the connector from the temperature sensor that is situated on the cooling system thermostat housing.

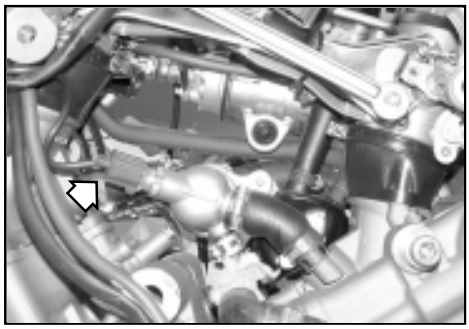

- Remove the connector of the camshaft position sensor.



- Remove the radiator by unscrewing the three screws **3** as shown in the figure and lift it up to remove it from its supports.
  (During this operation, it is advisable to remove the two radiator side protections by unscrewing the two relative fixings for each protection).

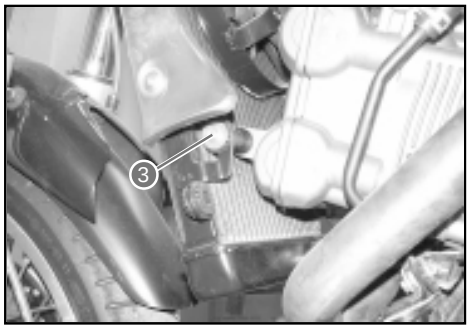

Downloaded from www.Manualslib.com manuals search engine

- Disconnect the connectors of the engine coolant temperature housing **1** and the cooling fan connector **2** and the hoses **6**. They are all found on the right hand side of the machine.

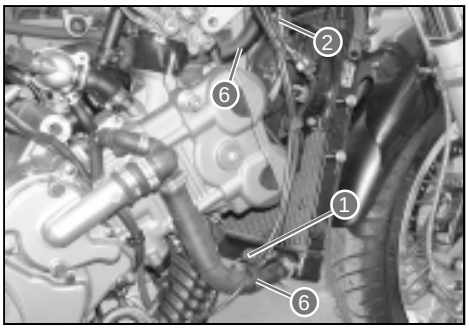

Take care when reassembling the electrical wiring and the rubber bands. It is important to replace the wiring exactly as it was before disassembly.

- Remove the band on the engine coolant thermostat housing as indicated in the figure.
- Remove the radiator complete with manicotti and cooling fan.

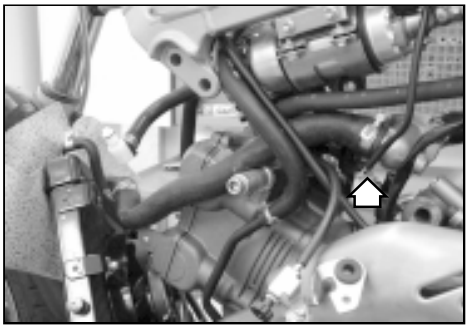

- Remove the butterfly bodies as described in page C.53 - C.55.

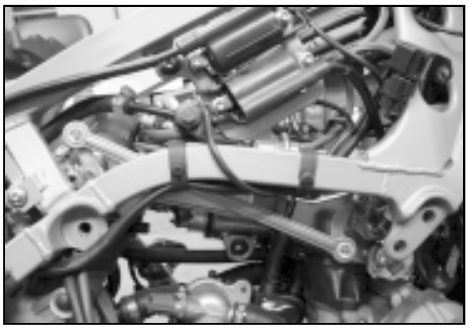

EXHAUST SILENCER REMOVAL

Remove the right and left hand silencers from the frame by unscrewing the two fixing screws.

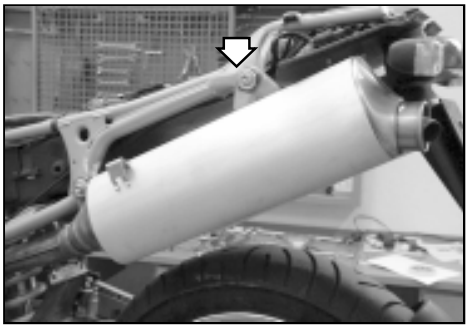

- Remove the two screws as indicated in the figure.
- Slacken the two exhaust fixing bands.
- Remove the exhaust unions **1**.

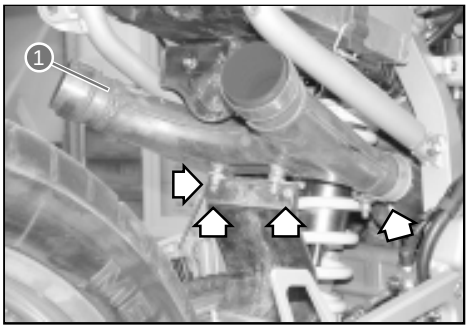

Downloaded from www.Manualslib.com manuals search engine

- Remove the two fixing screws, the front cylinder exhaust tube as indicated in the figure.
- Remove the exhaust tube.

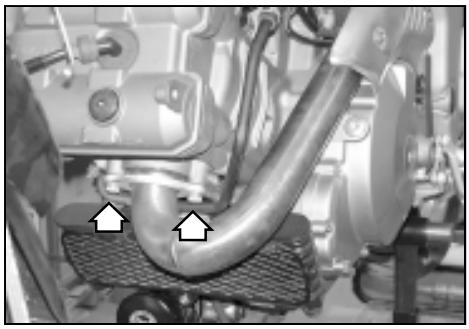

- After removing the screws as indicated in the figure, remove the rear cylinder exhaust tube.

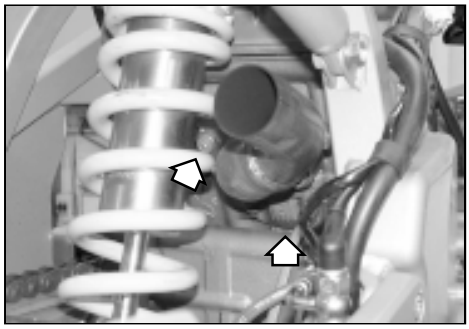

- Remove the left hand footrest assembly **1** together with the gearchange lever **2.**
- Remove the two screws **3** on the footrest and also the screw 4 on the gearchange lever (mark with a black marker the position of the lever on the gearchange lever shaft).

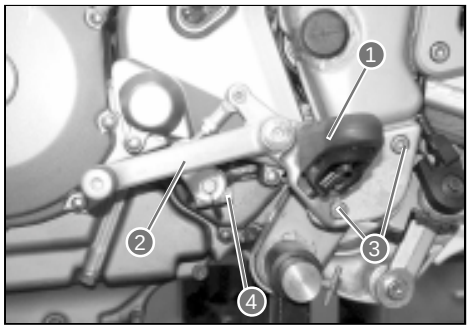

- Disconnect the connector **5** of the speed sensor lead **6** and remove the rubber band.
- Unscrew the three screws **7** and remove the cover **8** of the engine pinion together with the centring pin.

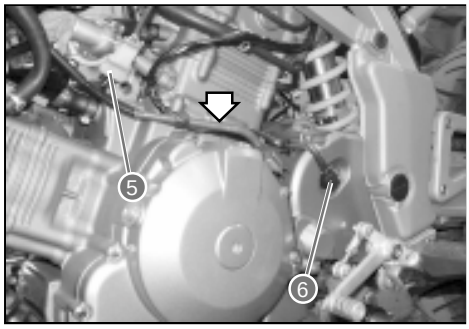

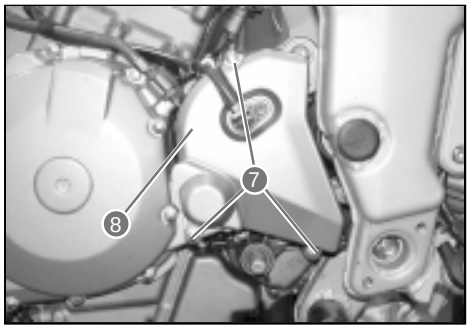

Downloaded from www.Manualslib.com manuals search engine

- Remove the two mounting bolts **1** and the washer of the clutch disengagement mechanism of the clutch.
- Remove the clutch disengagement mechanism assembly **2**.

To ease the reinstallation of the assembly, slacken off the locking nut and the adjuster screw before removing the mounting bolts of the clutch disengagement mechanism.

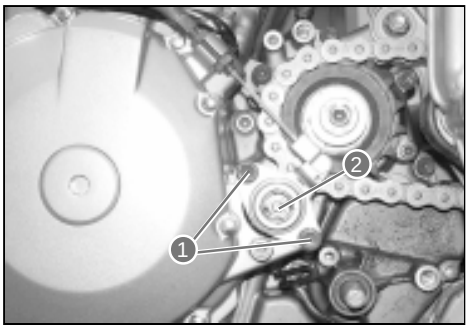

*Remove the clutch disengagement lever **3** from the clutch cable only in case of substitution. At the moment of reinstallation, bend the stop plate **A** of the clutch disengagement lever **3** to lock them together.*

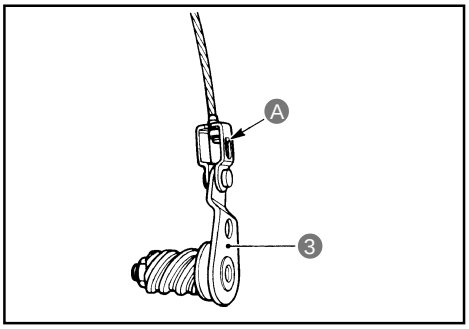

- Remove the clutch pushrod **4**.
- Slacken the nuts **5** and remove the clutch cable from the generator cover.

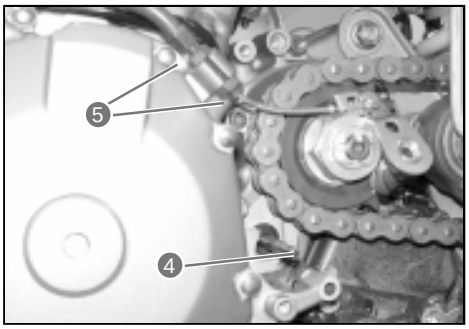

- Remove the speed sensor rotor **6** by unscrewing the screw **7**.

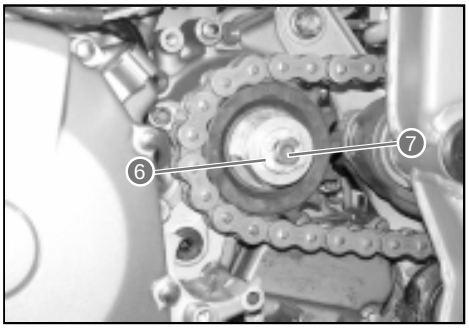

- Slacken off the rear wheel spindle nut **8**.
- Slacken the left and right hand chain adjusters **9** and then completely slacken the transmission chain.

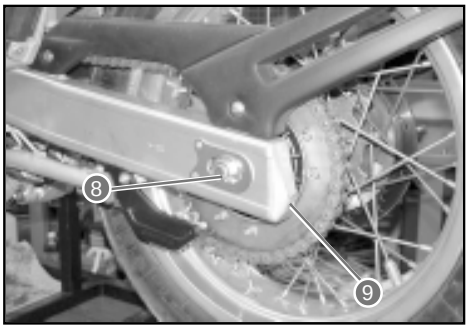

Downloaded from www.Manualslib.com manuals search engine

- Remove the transmission chain from the crown wheel.



- Remove the nut **1** and the engine pinion washer.
- Remove the engine pinion **2**.

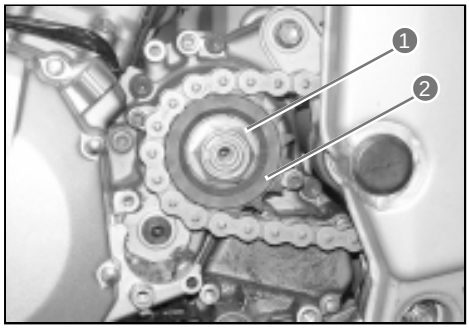

- Remove the oil radiator **3** by unscrewing the mounting bolts **4** and the junction bolts of the oil tubes.

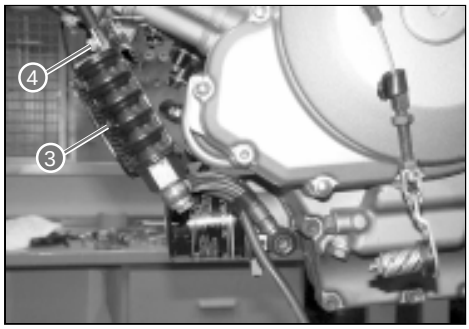

Downloaded from www.Manualslib.com manuals search engine

- Disconnect the electrical leads of the starter motor **1** and the oil pressure sensor **2**.
- Remove the insulated covers from the spark plugs.

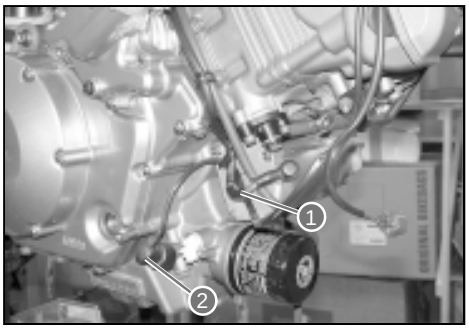

Take care when reassembling the electrical wiring and the rubber bands. It is important to replace the wiring exactly as it was before disassembly.

- Disconnect the connections of the stator and the connection of the speed sensor by releasing the rubber bands.



Take care when reassembling the electrical wiring and the rubber bands. It is important to replace the wiring exactly as it was before disassembly.

- Disconnect the connector of the neutral sensor lead.
- Remove the rubber bands.

Take care when reassembling the electrical wiring and the rubber bands. It is important to replace the wiring exactly as it was before disassembly.

- Disconnect the earth cable as indicated in the figure.

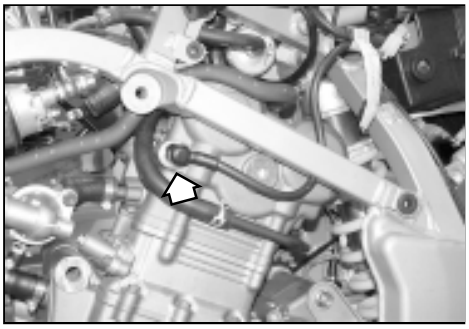

- Remove the secondary air tubes from the cylinder by unscrewing the two relative screws (for each tube) as indicated in the figure.

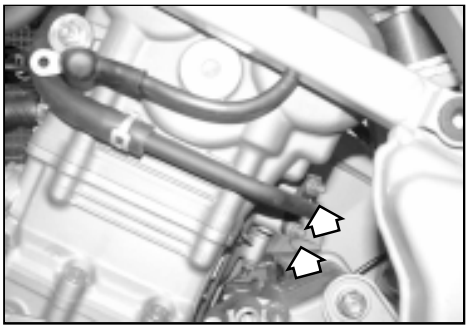

Downloaded from www.Manualslib.com manuals search engine

- Remove the right hand footrest by unscrewing the two fixings as shown in the figure.

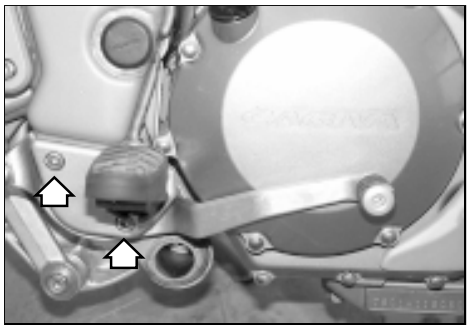

Removing the right hand footrest assists the removal of the engine from the frame.

- Remove the return spring of the rear brake pedal.
- Remove the rear brake pedal by unscrewing the fixings indicated in the figure. Be careful to not lose the washers and the components on the threaded spindle.

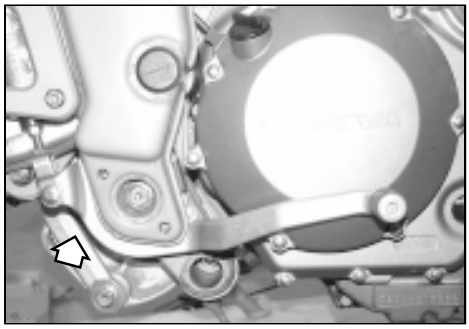

- Support the engine with a suitable support.

To facilitate the removal of the engine, lift up the frame by utilising a jack for safety.



- Unscrew the pin **1** as indicated in the figure and extract it.

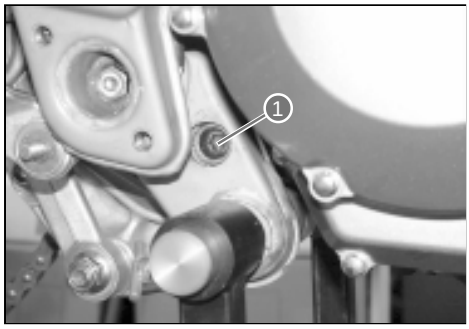

- Unscrew the nut **2** and extract the fixing pin that fixes the engine to the frame.

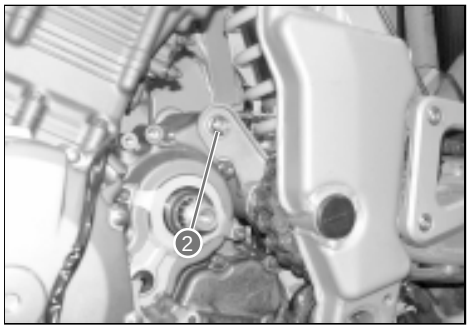

Downloaded from www.Manualslib.com manuals search engine

• Gradually lower the power plant.

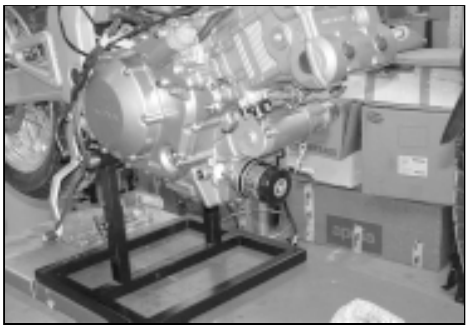

When removing the engine from the frame, take care not to damage either.

Downloaded from www.Manualslib.com manuals search engine

INSTALLATION OF THE ENGINE INTO THE FRAME

Install the engine in the reverse order of removal.
Proceed carefully taking care to correctly position the tubing and wiring.

- Before proceeding with the installation of the engine into the frame, support the frame with a jack or an adequate support.

- Gradually lift up the engine assembly, aligning the relative holes with those of the frame. Before tightening the various fixings of the engine to the specified torque, make sure that the fixings are all properly inserted into their holes.

Torque pressure
39.2/44.1 N·m (4/4.5 kg·m)

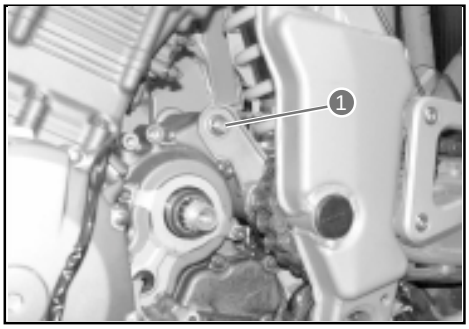

- Insert the stud **2** and tighten it to the specified torque.

Torque pressure
39.2/44.1 N·m (4/4.5 kg·m)

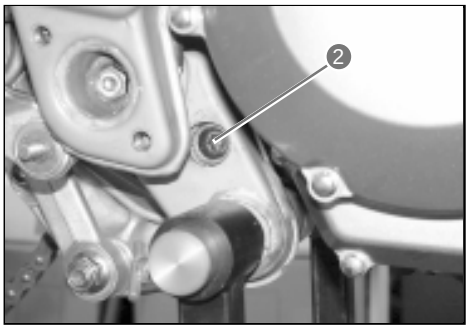

- Assemble the rear brake pedal by tightening the fixing pivot to the specified torque.

Torque pressure
21.5/23.5 N·m (2.2/2.4 kg·m)

- Attach the return spring.

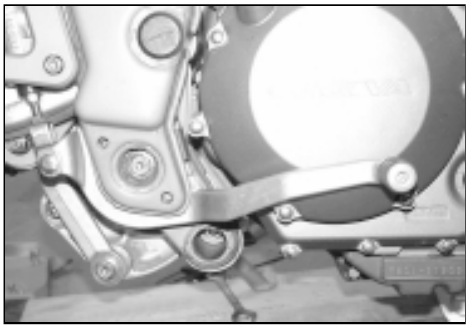

- Assemble the footrest by tightening the two screws to the specified torque.

Torque pressure
23.5/25.4 N·m (2.4/2.6 kg·m)



Downloaded from www.Manualslib.com manuals search engine

- Reinstall the secondary air tubes on the cylinders tightening the screws to the specified torque.

Torque pressure
Secondary air tube fixing 8.6/9.8 N.m (0.9/1.0 kg-m)

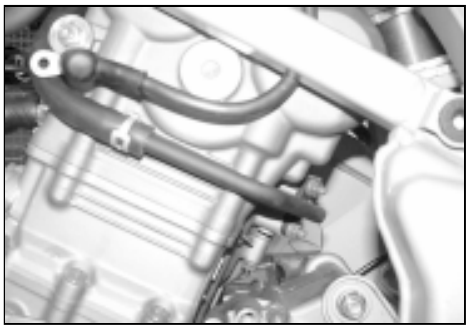

Utilise new washers when refitting the tubes onto the cylinders.

- When inserting the insulated covers onto the spark plugs, make sure that the triangular countersigns on the insulated covers point towards the exhaust side of the cylinder.

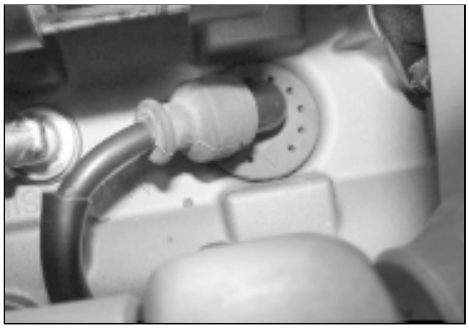

Downloaded from www.Manualslib.com manuals search engine

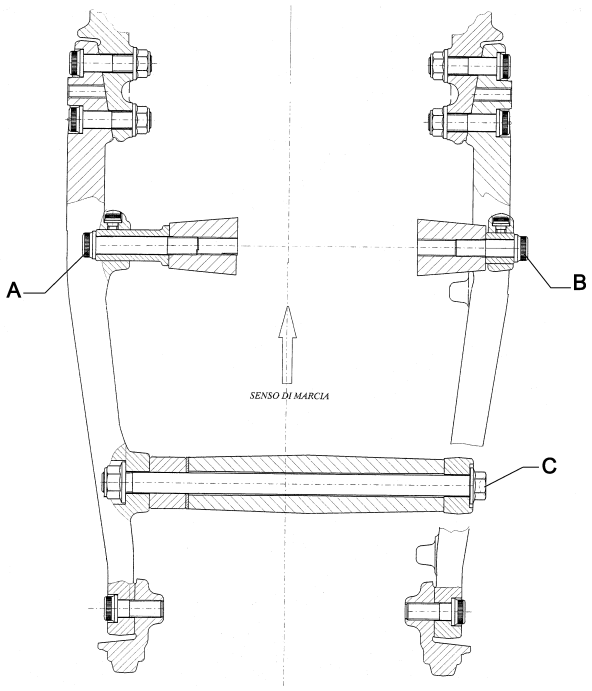

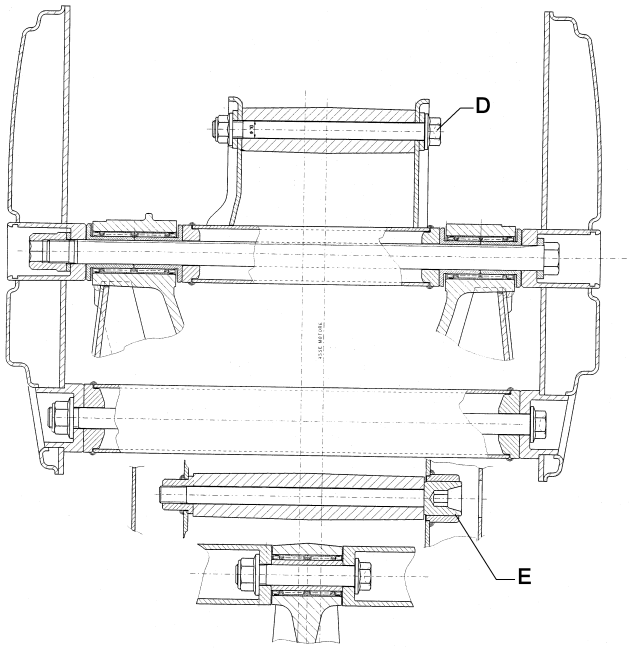

Tightening torques:

ITEM	N·m	kg-m	Description
A	45÷50	4,5÷5,0	front fix. screw-left hand side of the eng./frame
B	45÷50	4,5÷5,0	front fix. screw-right hand side of the eng./frame
C	45÷50	4,5÷5,0	central fixing screw engine/2 support frames
D	45÷50	4,5÷5,0	upper rear fix. screw engine/frame bracket
E	45÷50	4,5÷5,0	lower rear fix. screw engine/frame bracket

LENGTH

ITEM		mm
	A	60
	B	35
Bolt	**C**	216
	D	125
	E	156

Downloaded from www.Manualslib.com manuals search engine

- Install the oil-cooler and tighten oil line union bolts **1** with the prescribed torque.

Tightening torque:
Oil line union bolt **23 N.m (2,3 kg-m) (16.79 lb·ft)**

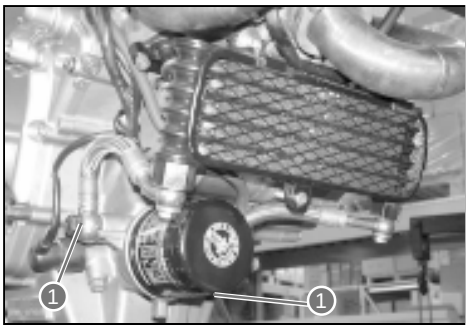

- Tighten engine sprocket nut **2** with the specified torque.

Tightening torque:
Engine sprocket nut **115 N.m (11,5 kg-m) (83.95 lb·ft)**

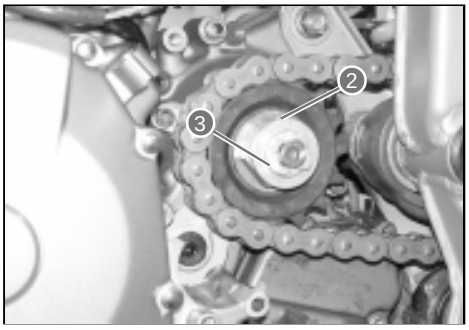

- Tighten speed sensor rotor bolt **3** with the prescribed torque.

Tightening torque:
Speed sensor rotor bolt **13 N.m (1,3 kg-m) (9.49 lb·ft)**

- After adjusting the drive chain slack by means of adjusters **4**, tighten wheel spindle nut **5** with the specified torque.

Tightening torque:
Rear axle nut **100 N.m (10,0 kg-m) (73 lb·ft)**

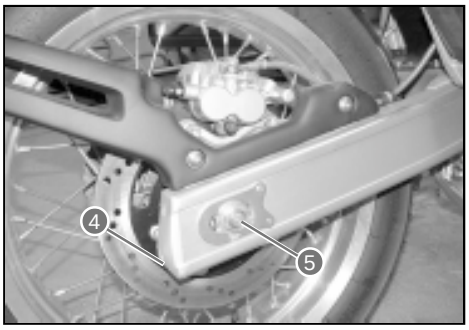

For information on how to adjust the drive chain slack, see page B-21.

- Install the throw-out using the procedure described below.
- Screw in adjuster **6** in the clutch lever assembly.

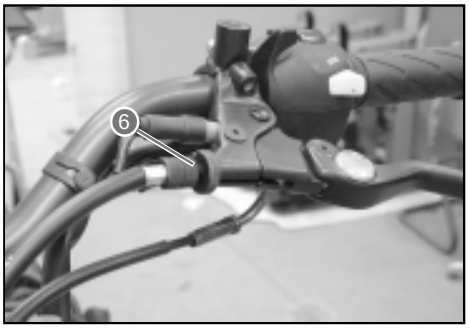

- Fit the clutch push rod

Grease the clutch push rod before installing it.

Specific product: AGIP GREASE 30

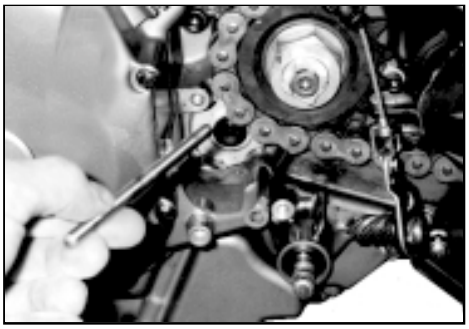

- Loosen counternut **7** and completely unscrew adjusting screw **8**.

Downloaded from www.Manualslib.com manuals search engine

- Fit the cable on the generator cover and momentarily place throw-out lever **1** on the push rod.
- Pull the cable and adjust the angle of the throw-out lever end within 5-10 degrees by rotating adjuster **2**.
- Tighten counternut **3**.

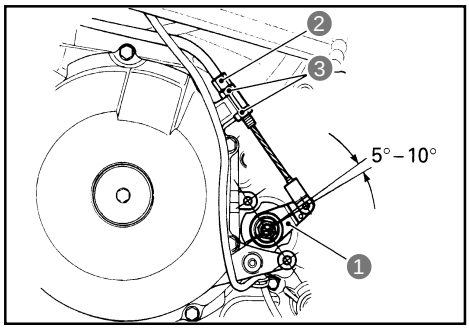

- Fully screw in throw-out **4** onto the throw-out lever and place both parts on the push rod.

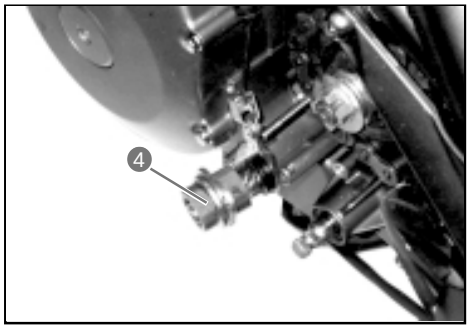

Grease the seal lip and the throw-out balls.

Specific product: AGIP GREASE 30

Position the throw-out as shown in the figure at the right.

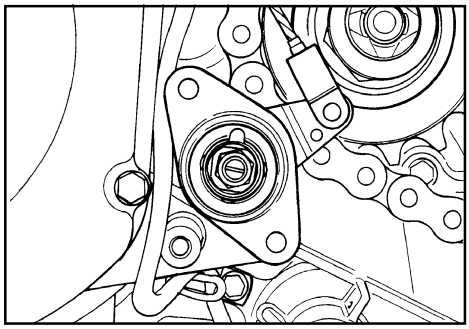

- Fully tighten the throw-out fastening bolts with the related spacer.

Apply a small quantity of threadlocking product to the throw-out fastening bolts.
Specific product: LOC-TITE 243

- Install throw-out return spring **5**.
- Slowly rotate adjusting screw **6** until resistance is felt.
- From this position loosen adjusting screw **6** by 1/4 of a turn and tighten counternut **7**.

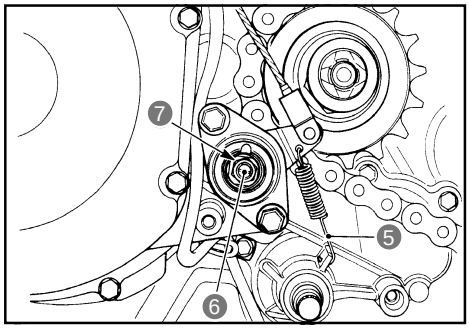

- Turn in or out adjuster **8** under the sheath to obtain 10-15 mm (0.3937-0.5905 in) of play **A** at the end of the clutch lever.

Clutch lever play: 10-15 mm (0.3937-0.5905 in)



Downloaded from www.Manualslib.com manuals search engine

- Reassemble the left hand footrest tightening the two bolts to the specified torque.

Torque pressure
Footrest fixing bolts 23.5/25.4 N.m (2.4/2.6 kg-m)

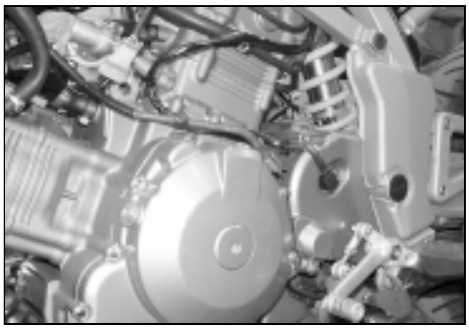

- Reassemble the gearchange lever onto the gear lever shaft making sure that the previously marked countersigns are in line with each other. Tighten to the specified torque.

Torque pressure
Gearchange lever/gear shaft fixing bolt

Replace the pedal in the position as described in the Suspension chapter.

- Tighten the bolts of the exhaust tubes and the fixing bolts of the silencers to the specified torque.

When refitting the exhaust tubes to the cylinders, renew the gaskets.

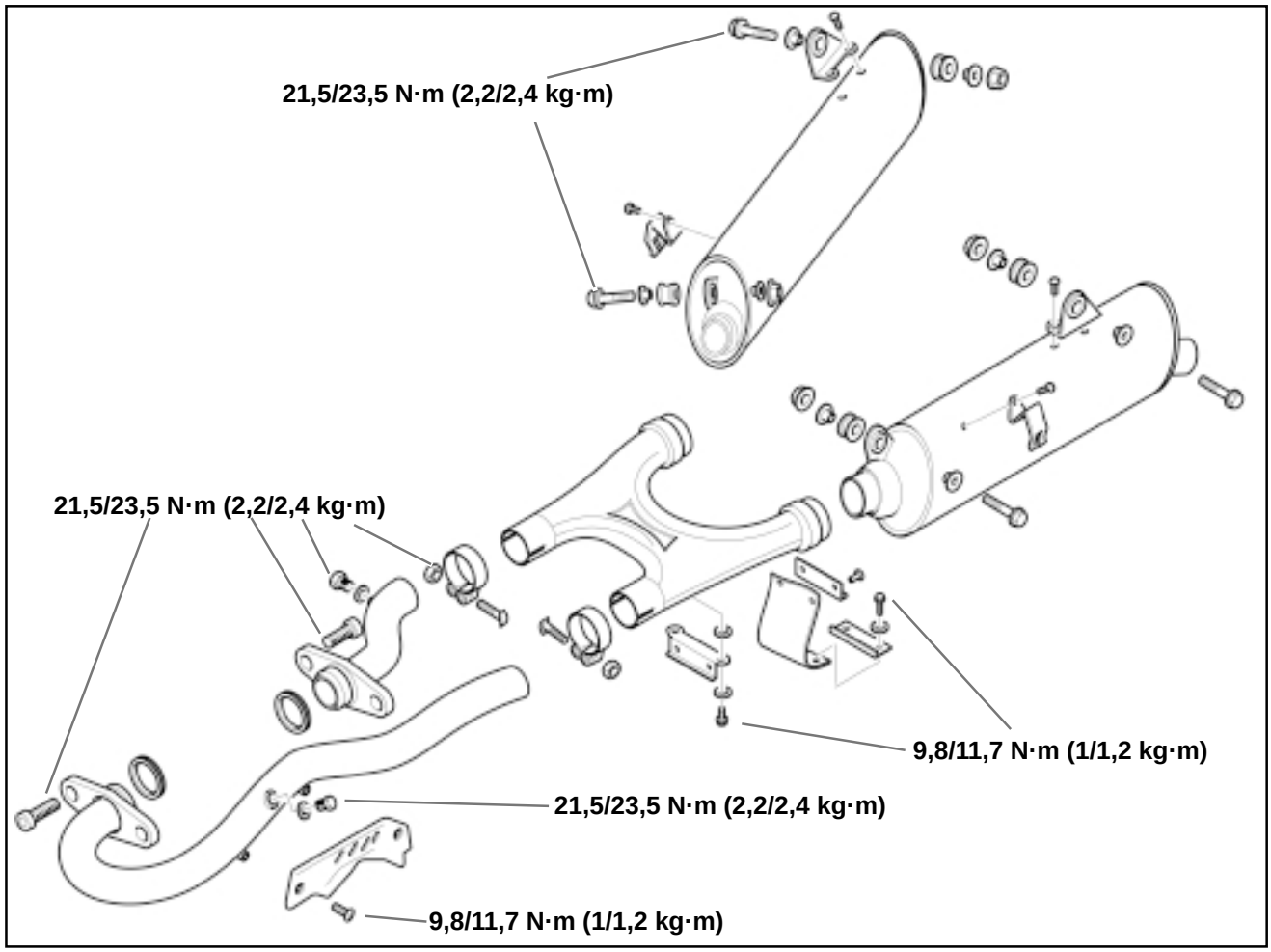

Downloaded from www.Manualslib.com manuals search engine

- Reassemble the various components following the reverse order of removal of the engine from the frame. Reassemble the left and right hand engine support frames, supporting the engine so that the various fixing holes can be aligned correctly.
  Tighten the various fixings to the specified torque.

Torque pressures
Engine support frame fixing/engine 44.1/49.05 N.m (4.5/5.0 kg-m)
Engine support frame fixing 44.1/49.05 N.m (4.5/5.0 kg-m)

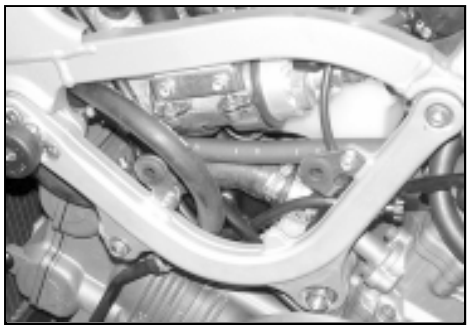

- Reassemble on top of the engine support frames the anti-vibration mountings for the tank.

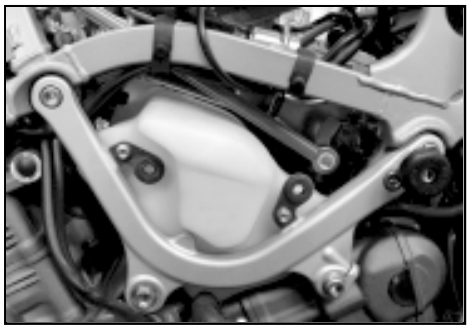

Check and adjust the following:

	Page
- Engine coolant	B.19
- Engine oil	B.16
- Synchronisation of the butterfly valves	C.69
- Tickover adjustment	B.17
- Transmission chain slack	B.21
- Throttle cable play	B.18
- Rear brake pedal and gearchange lever position	B.24

Downloaded from www.Manualslib.com manuals search engine

DISASSEMBLING AND REASSEMBLING THE ENGINE

DISASSEMBLING THE ENGINE

Identify the position of each removed component (intake pipe, camshaft, cylinder head, piston, connecting rod, etc.) and sort the parts into groups so that each component can be reinstalled in its original position.

- Remove the front and rear spark plugs.
- Remove crankcase breather pipe **2**.

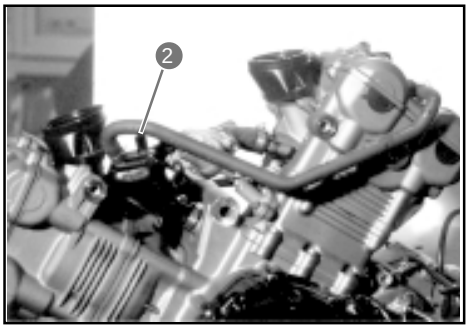

- Remove thermostat casing **3** with pipes **4**.

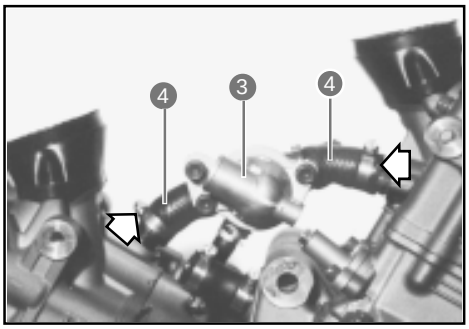

- Remove water joints **5** and O-rings **6** from the head of each cylinder.

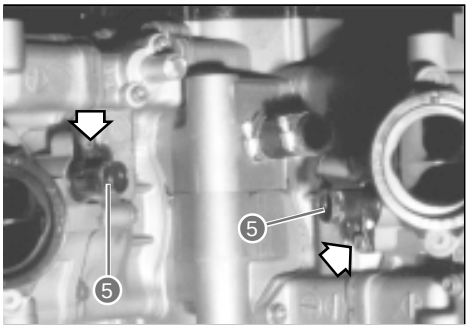

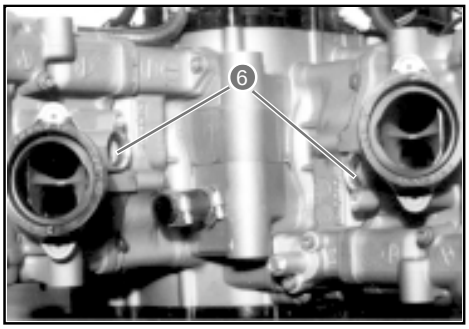

Downloaded from www.Manualslib.com manuals search engine

- Remove valve gear timing inspection plug **1** and generator cover plug **2**.

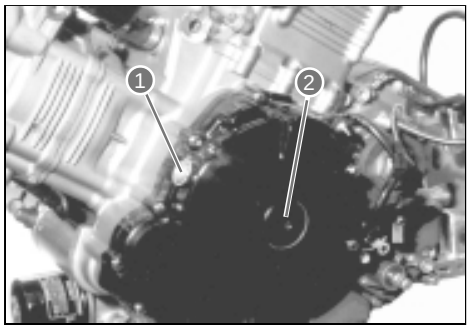

NO. 1 (FRONT) CYLINDER

- Remove the cylinder head cover bolts and the related gaskets.
- Remove cylinder head cover **3** and the gaskets.
- Remove the dowel pins.

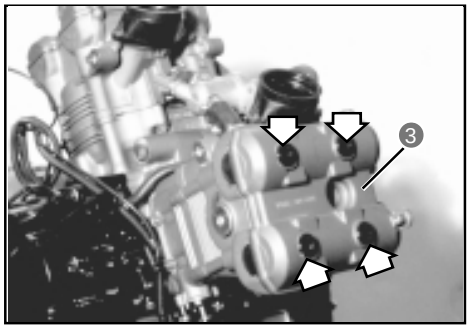

- Turn the crankshaft until the "F|T" line on the generator rotor is aligned with the mark on the valve gear timing inspection hole, and bring the camshafts to the position shown in the figure.

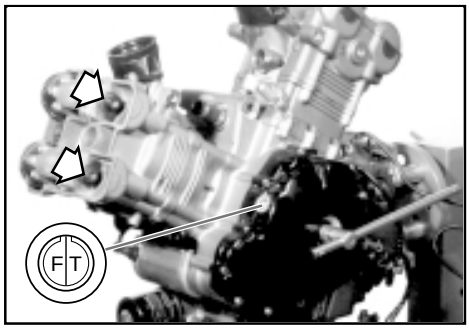

*In the above condition, the no. 1 (front) cylinder is at the top dead centre (TDC) of the compression stroke and lines **A** on the camshafts are parallel with the mating surface of the cylinder head cover (see pages D-86 -87).*

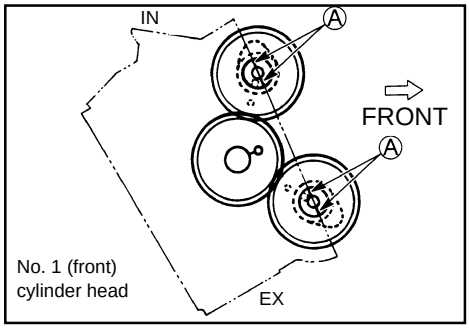

- Remove camshaft bearings **4** after unscrewing the bolts.

The camshaft journal bearings should be marked "front IN." and "front EX.".

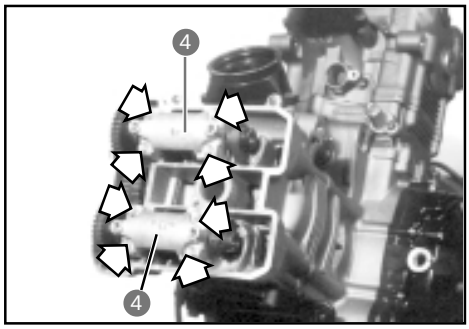

Be sure to loosen the camshaft journal bearing bolts evenly by shifting the spanner diagonally.

Downloaded from www.Manualslib.com manuals search engine

- Remove the two camshafts, intake **1** and exhaust **2**.
- Remove C-rings **3**.
- Remove dowel pins **4**.

*Take care not to drop C-rings **3** and dowel pins **4** into the crankcase.*

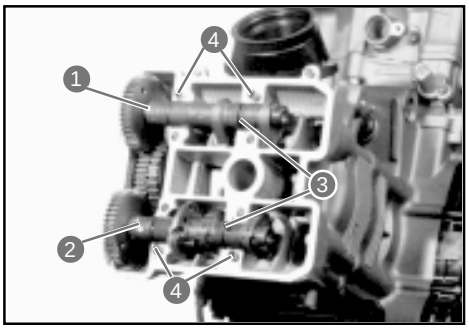

- Remove front timing chain tension adjuster **5** and the related gasket.

*To facilitate reinstallation, slightly loosen front timing chain tension adjuster bolt **6** before removing the adjuster.*

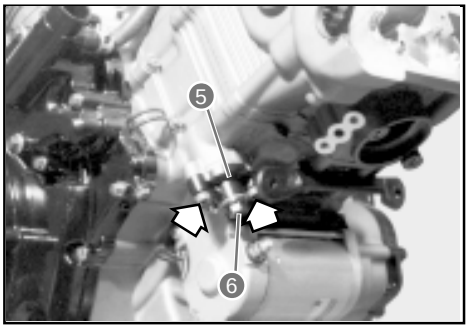

- Remove no. 2 valve motion idler gear/sprocket **7** after removing shaft **8** with copper washer **9** and thrust washer **10**.

*Take care not to drop thrust washer **10** into the crankcase.*

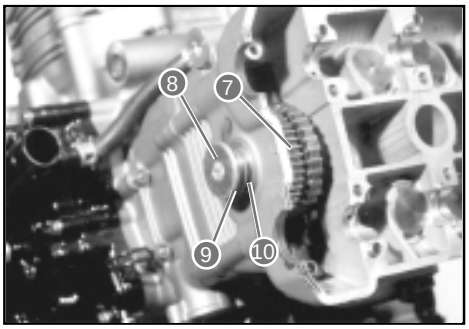

- Remove cylinder head bolts (M6) **11** and timing chain stretcher fastening bolt **12**.
- Remove the timing chain stretcher.

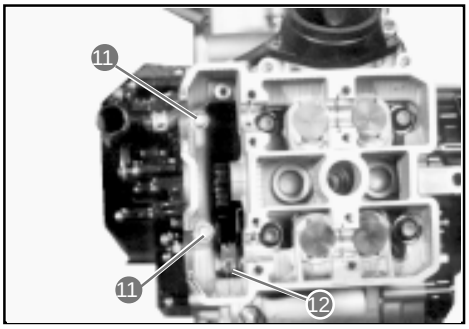

- Remove oil cooler mounting bracket **13** after removing the cylinder head nuts (M6).

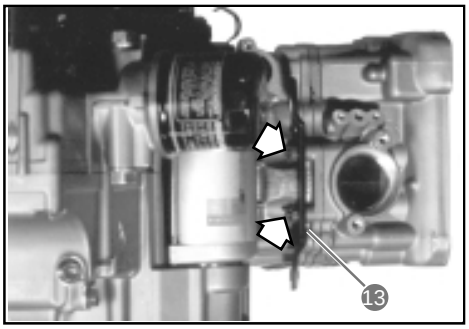

Downloaded from www.Manualslib.com manuals search engine

- Remove cylinder head nut (M8) **1**, and loosen cylinder nuts **2**.

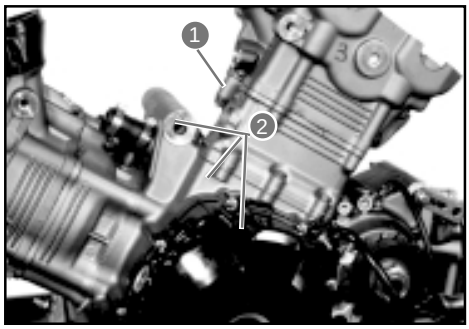

- Remove the cylinder head bolts (M10) with the related washers.
- Remove the cylinder head assembly.

Loosen the cylinder head bolts gradually by following a crosswise pattern.

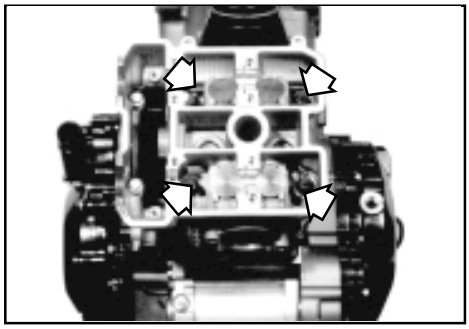

Take care not to damage the cylinder while removing or handling it.

** Parts are the same for the front and rear cylinder heads.*
** To identify each cylinder head, mark the positions of the front and rear cylinders.*
** Refer to pages (D-81 -104) for instructions on cylinder head servicing.*

- Remove cylinder head gasket **3**, dowel pins **4**, timing chain guide **5**, cylinder nuts **6**, and clamp **7**.
- Remove the cylinder.

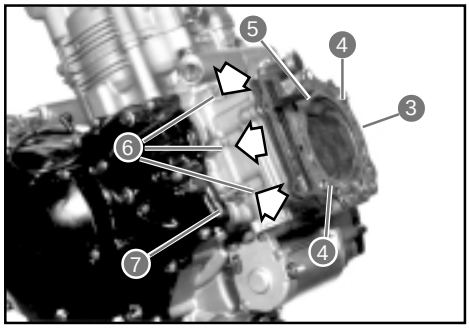

Firmly grip the cylinder at both ends and lift it up squarely. If the cylinder does not come out, loosen the gasket by gently tapping the finless part with a plastic mallet.

- Remove cylinder base gasket **8** and dowel pins **9**.
- Remove oil jet **10**.

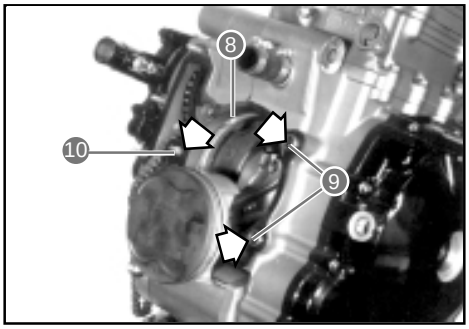

Downloaded from www.Manualslib.com manuals search engine

- Place a clean rag over the cylinder base to prevent the piston pin circlip from falling into the crankcase.
- Remove the piston pin circlip.
- Extract the piston pin and remove the piston.

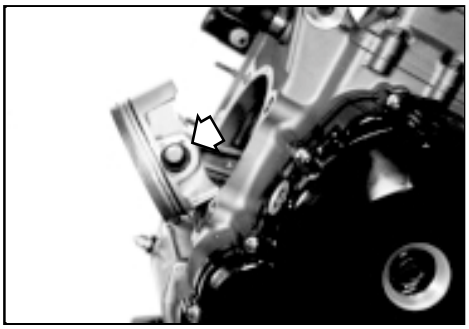

** Write the cylinder numbers on the crowns of their respective pistons.*
** Refer to pages (D-105 -113) for information on how to inspect the cylinder and the piston.*

NO. 2 (REAR) CYLINDER

- Remove camshaft position sensor **1** and the related gasket.
- Remove the cylinder head cover bolts and the related gaskets.
- Remove cylinder head cover **2** and the related gaskets.
- Remove the dowel pins.

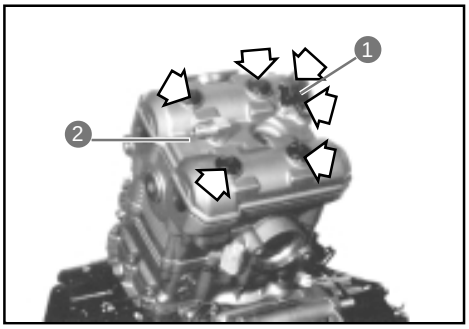

- Turn the crankshaft until the “R|T” line on the generator rotor is aligned with the mark on the valve gear timing inspection hole, and bring the camshafts to the position shown in the figure.

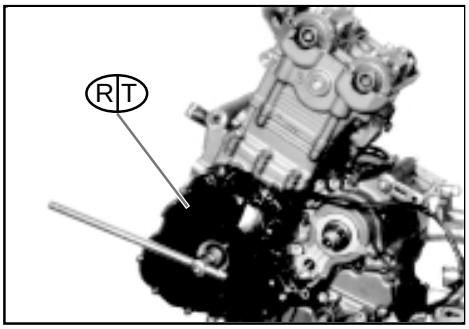

In the above condition, the no. 2 (rear) cylinder is 90 degrees after the top dead centre (ATDC) of its power stroke and lines A on the camshafts are parallel with the mating surface of the cylinder head cover (see pages D-86 -87).

Pull up the front timing chain, or it may get caught between the crankcase and the no. 1 valve motion idler gear/sprocket when the crankshaft is turned.

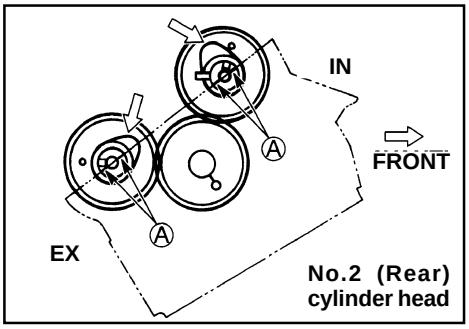

- Remove camshaft bearings **3** after removing the related bolts.

The camshaft journal bearings should be marked “rear IN.” and “rear EX.”.

Be sure to loosen the camshaft bearing bolts evenly by shifting the spanner diagonally.

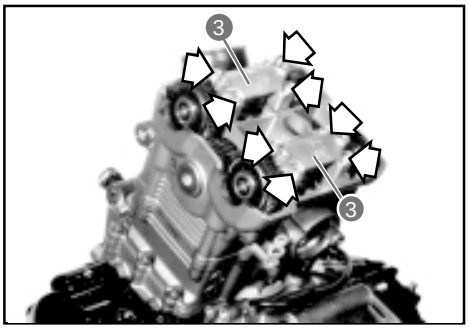

Downloaded from www.Manualslib.com manuals search engine

- Remove the two camshafts, intake **1** and exhaust **2**.
- Remove C-rings **3**.
- Remove dowel pins **4**.

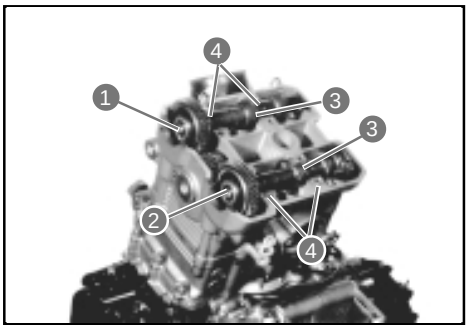

*Take care not to drop C-rings **3** and dowel pins **4** into the crankcase.*

- Remove rear timing chain tension adjuster **5** and the related gasket.

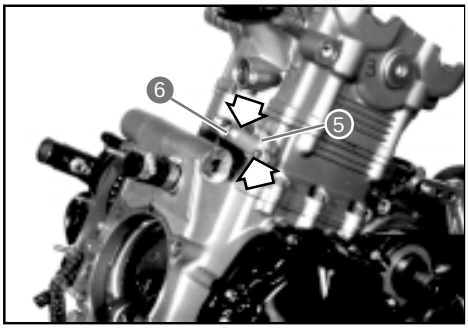

*To facilitate reinstallation, slightly loosen rear timing chain tension adjuster bolt **6** before removing the adjuster.*

- Remove no. 2 valve motion idler gear/sprocket **7** after removing shaft **8** with copper washer **9** and thrust washer **10**.

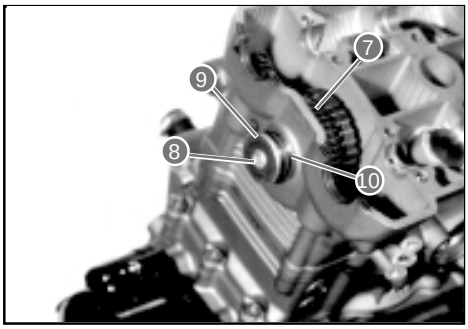

*Take care not to drop thrust washer **10** into the crankcase.*

Downloaded from www.Manualslib.com manuals search engine

- Remove cylinder head bolts (M6) **1** and timing chain stretcher fastening bolt **2**.
- Remove timing chain stretcher **3**.

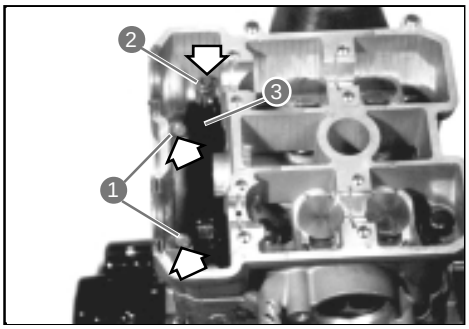

- Remove cylinder head nuts (M6) **4**.

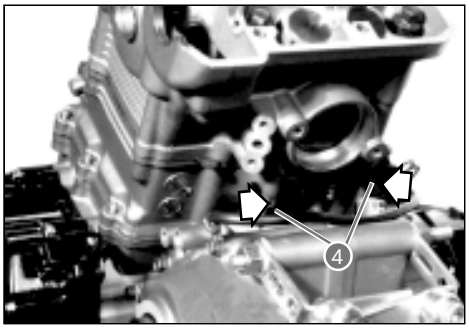

- Remove cylinder head nut (M8) **5**.
- Loosen cylinder nuts **6**.

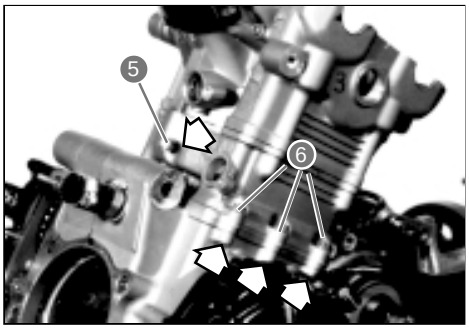

- Remove the cylinder head bolts (M10) with the related washers.
- Remove the cylinder head assembly.

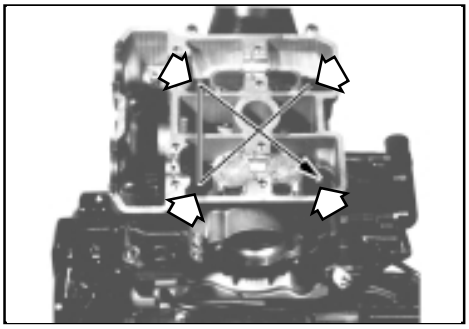

Loosen the cylinder head bolts gradually by following a crosswise pattern.

CAUTION:
Take care not to damage the cylinder while removing or handling it.

** To identify each cylinder head, mark the positions of the front and rear cylinders.*
** Refer to the section CAMSHAFT/CYLINDER HEAD for instructions on cylinder head servicing.*

Downloaded from www.Manualslib.com manuals search engine

- Remove cylinder head gasket **1**, dowel pins **2**, timing chain guide **3**, and cylinder nuts **4**.
- Remove the cylinder.

Firmly grip the cylinder at both ends and lift it up squarely. If the cylinder does not come out, loosen the gasket by gently tapping the finless part with a plastic mallet.

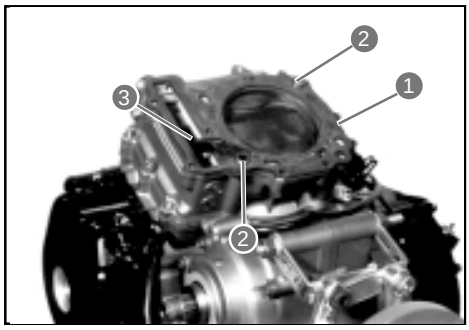

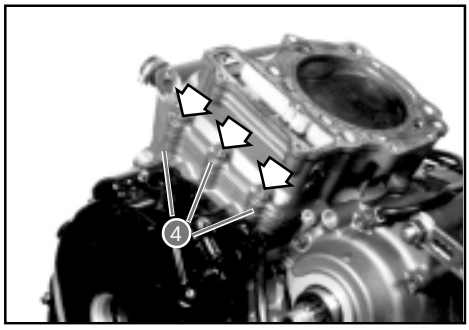

- Remove cylinder base gasket **5** and dowel pins **6**.
- Remove oil jet **7**.

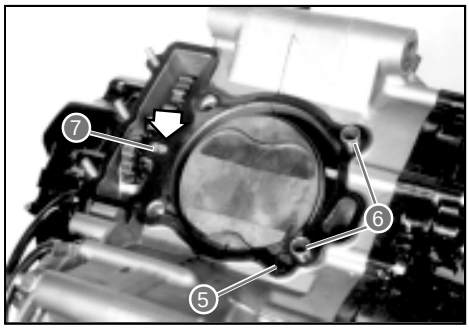

- Place a clean rag over the cylinder base to prevent the piston pin circlip from falling into the crankcase.

Pull up the timing chains, or they may get caught between the crankcase and the valve gear driving sprocket when the crankshaft is turned.

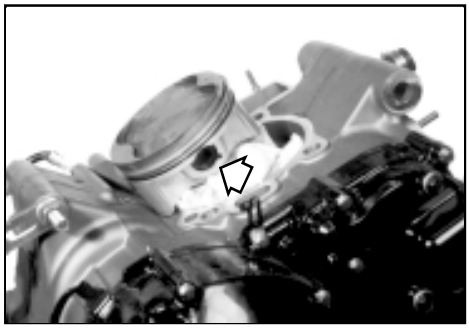

- Remove the piston pin circlip.
- Extract the piston pin and remove the piston.

** Write the cylinder numbers on the crowns of their respective pistons.*

** Refer to page D-108 for information on how to inspect the cylinder and the piston.*

- Remove starter motor **8**.

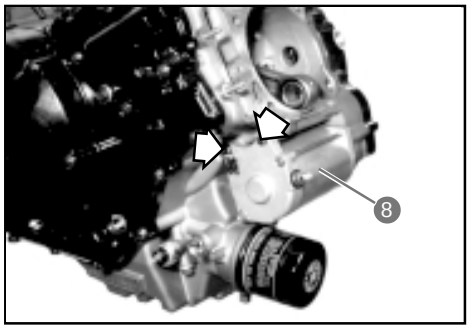

Downloaded from www.Manualslib.com manuals search engine

- Remove generator cover **1**.

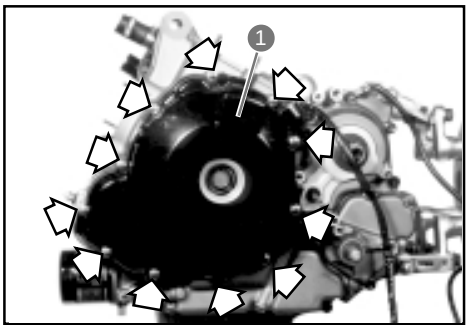

- Remove dowel pin **2** and gasket **3**.

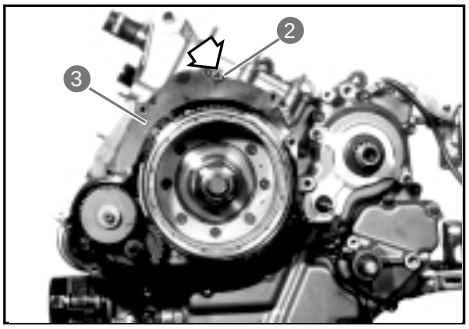

- Remove starting torque limiter **4** and washers **5**.
- Remove starting idler gear **6**, spacer **7**, and shaft **8**.

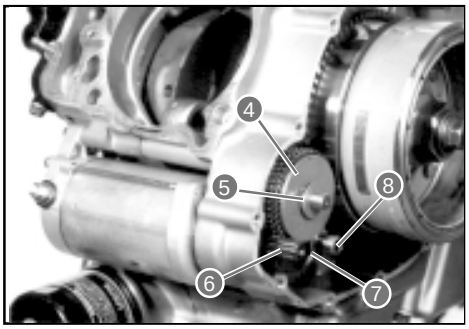

- Remove bushings **9** from the crankcase and the generator cover.

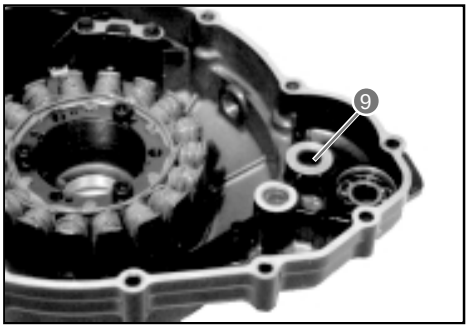

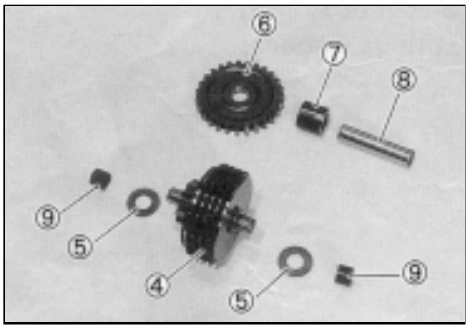

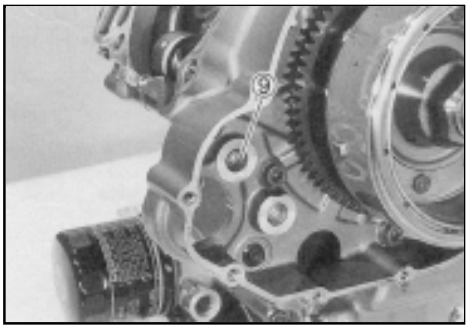

Downloaded from www.Manualslib.com manuals search engine

- Remove water pump casing **1** with the O-ring.

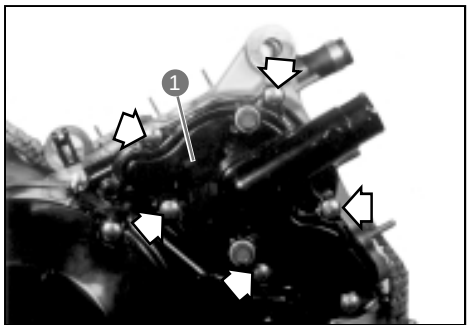

- Remove dowel pin **2**.
- Remove impeller **3**.
- Remove clutch bell housing cover **4**.
- Remove clutch cover **5** and the clamps.

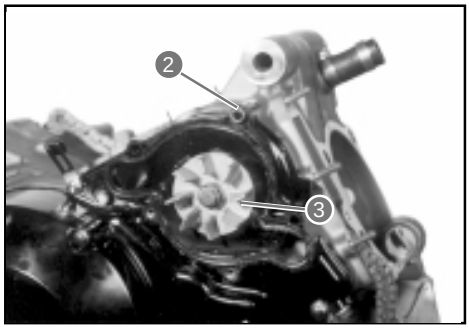

** Extract the clutch cover squarely to avoid damaging the water pump oil seal.*

** Refer to page D-125 for instructions on how to remove and fit the oil seal and the mechanical seal.*

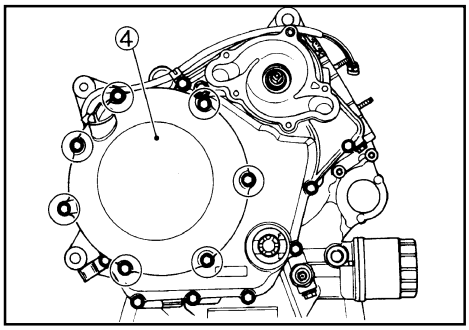

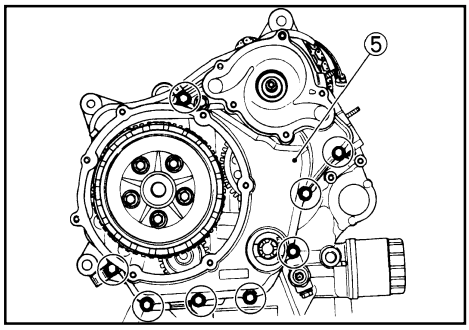

- Remove gasket **6** and dowel pins **7**.

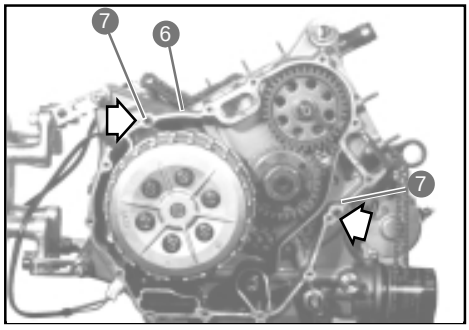

- While holding the generator rotor with a 36 mm (1.417 in) spanner, remove the bolts fastening the clutch springs and then the spring following a crosswise pattern.

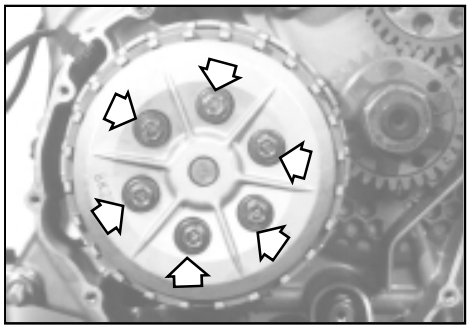

Downloaded from www.Manualslib.com manuals search engine

- Remove pressure plate **1**.

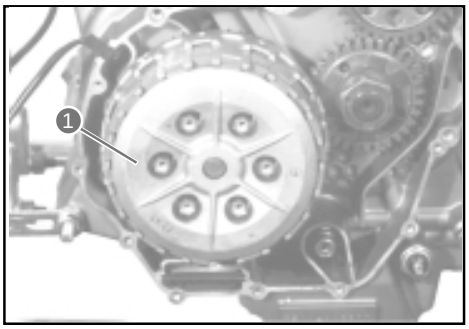

- Remove push rod **2**, bearing **3** and thrust washer **4**.

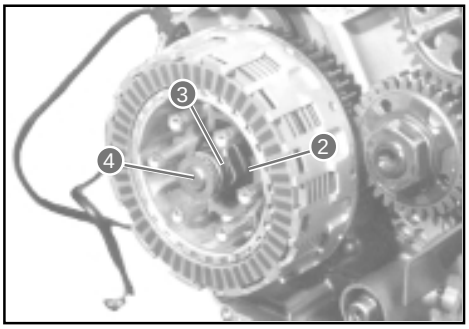

- Remove clutch push rod **5**.

*Should push rod **5** be difficult to extract, use a magnet or an iron wire.*

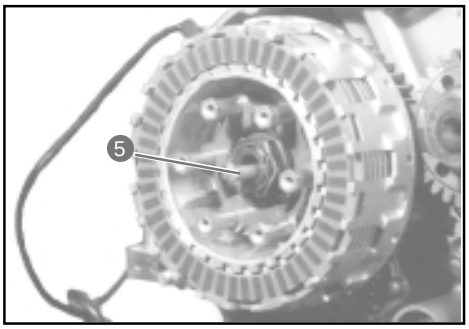

- Remove the clutch driving and driven plates.

- Remove spring washer **6** and its seat **7**.

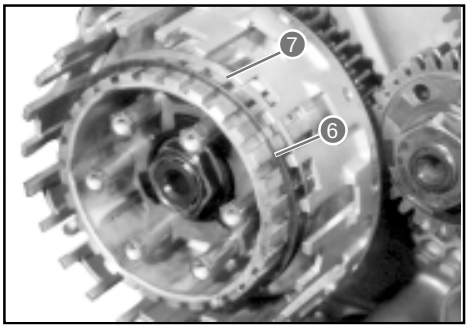

- Unlock clutch drum nut **8**.
- While holding the clutch drum with the special tool, remove clutch drum nut **8**.

Specific tool: 800096675
Clutch hub sleeve support

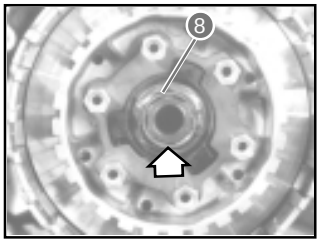

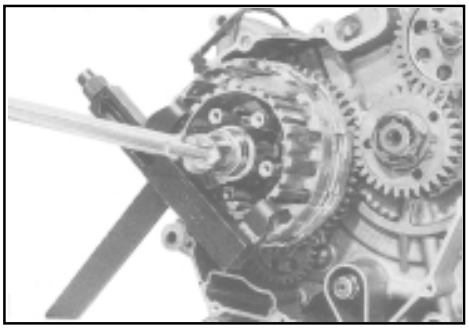

Downloaded from www.Manualslib.com manuals search engine

- Remove washer **1**.

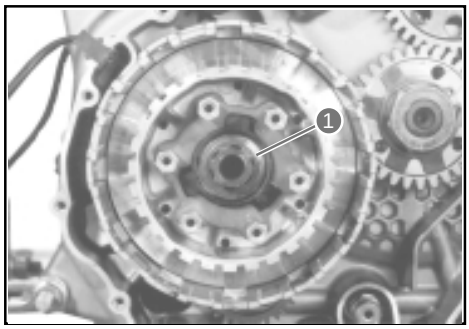

- Remove clutch drum **2** together with driving cam **3** and driven cam **4**.

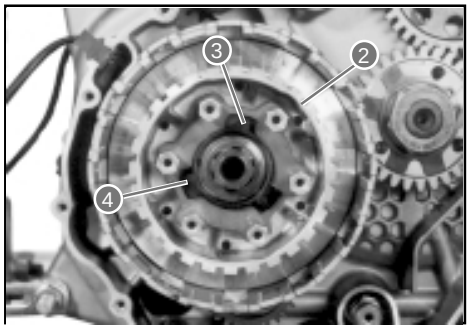

- Remove driving cam **3** and driven cam **4** from clutch drum **2**.

These three parts must be replaced as a set.

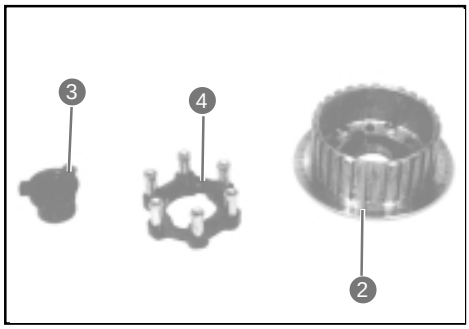

- Remove thrust washer **5**.
- Remove primary driving gear assembly **6**.

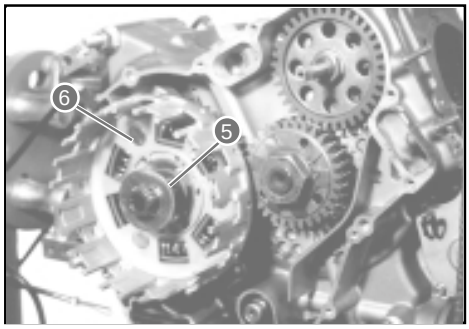

Downloaded from www.Manualslib.com manuals search engine

- Remove needle roller bearing **1**, collar **2**, and thrust washer **3**.

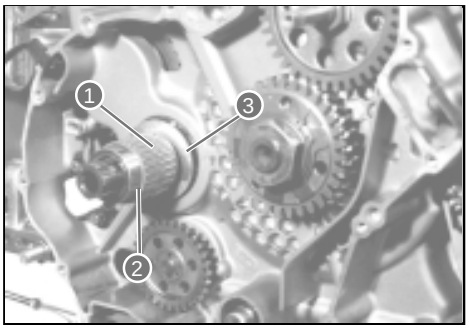

- Remove oil pump driven gear **4** after removing the circlip.

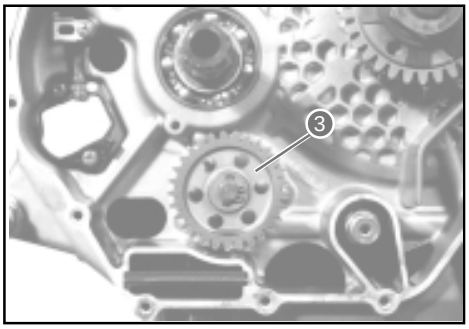

- Remove pin **5** and washer **6**.

*Take care not to drop the circlip, pin **5** or washer **6** into the crankcase.*

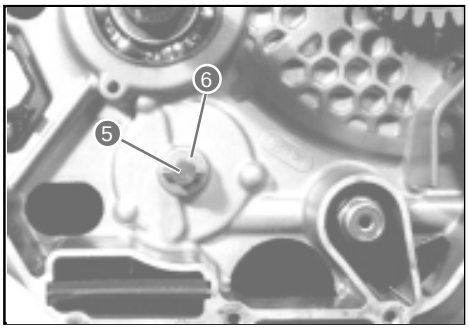

- Remove oil pressure regulator **7** and oil sump filter **8**.

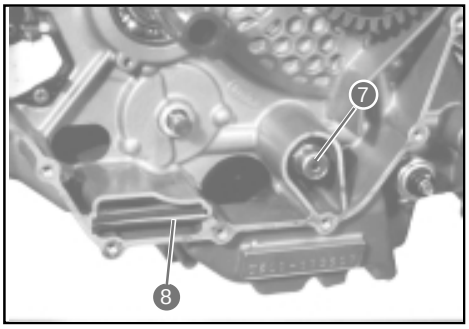

- Remove neutral switch **9** and cable guide **10** after removing the related screws.

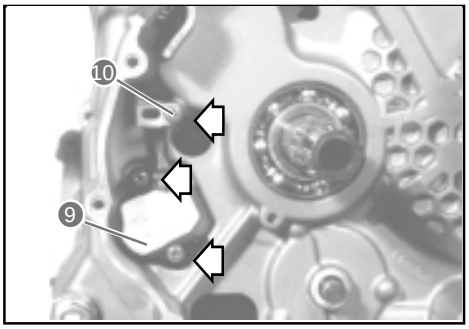

Downloaded from www.Manualslib.com manuals search engine

- Remove neutral switch contact **1** and the related spring **2**.

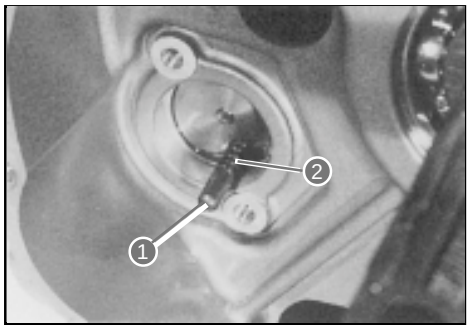

- While holding the generator rotor with a 36-mm spanner, remove no. 1 valve motion idler gear/sprocket nut **3** and the related washer.

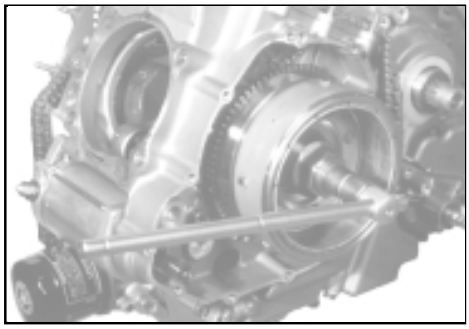

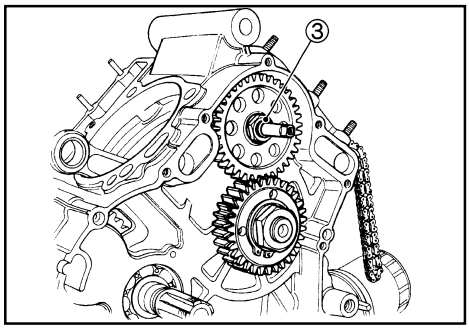

- Insert a bar of suitable size into the holes of the primary driving gears to align the teeth of the scissors gears.
- Remove no. 1 valve motion idler gear/sprocket **4** and timing chain **5**.

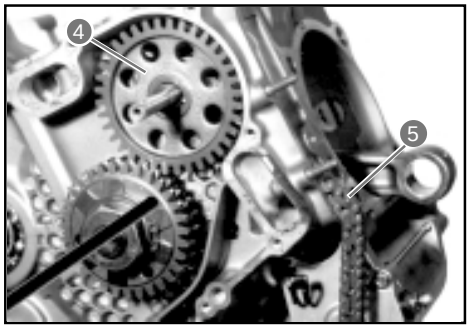

- Remove key **6**.

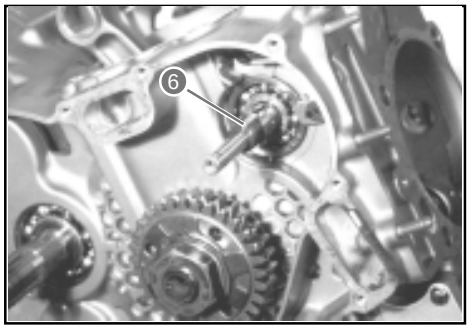

Downloaded from www.Manualslib.com manuals search engine

- While holding the generator rotor with a 36 mm (1.417 in) spanner, remove primary driving gear nut **1**.

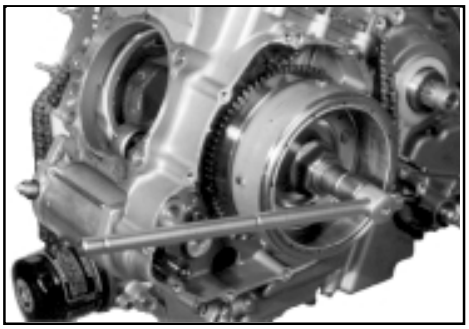

This nut has a left-hand thread. Turning it anticlockwise may cause damage.

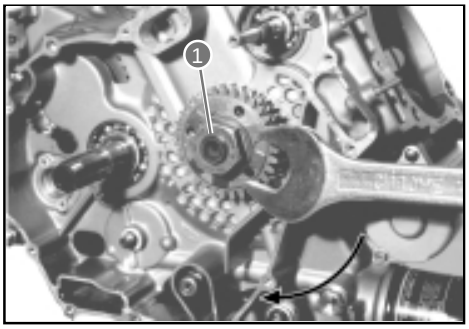

- Remove washer **2**.
- Remove primary driving gear assembly **3**.

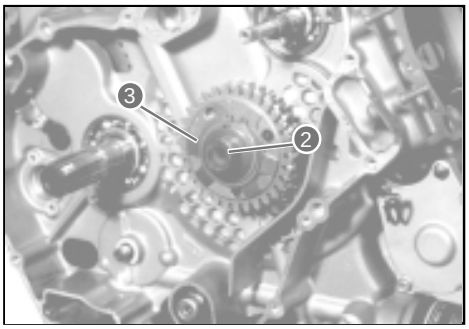

Refer to page D-130 for instructions on how to remove and fit the primary driving gear.

- Remove key **4** and thrust washer **5**.

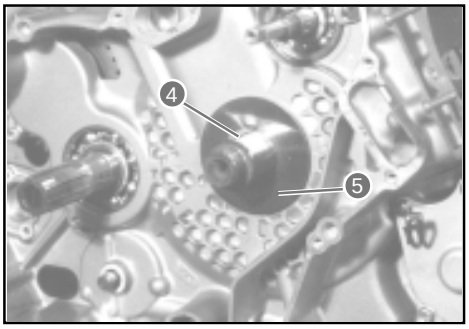

- While holding the generator rotor with a 36 mm (1.417 in) spanner, remove its bolt and washer.

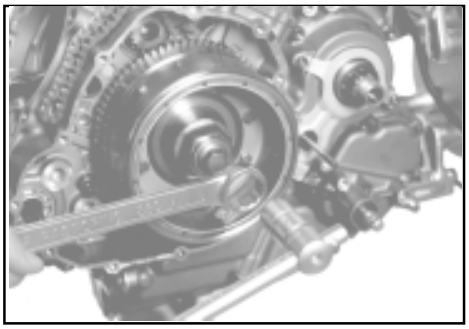

Downloaded from www.Manualslib.com manuals search engine

- After removing the generator rotor bolt, fit the special tool in the hub and remove generator rotor assembly **1** by rotating the special tool while holding the rotor with a 36 mm (1.417 in) spanner.

Specific tool: 800096684 Rotor extractor

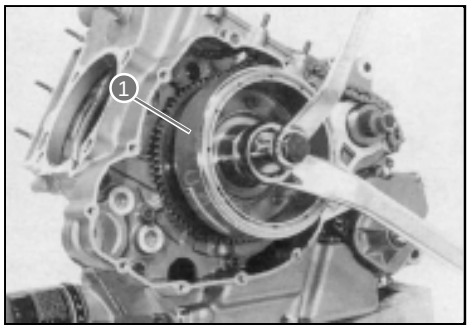

- Remove key **2** and starting driven gear **3**.

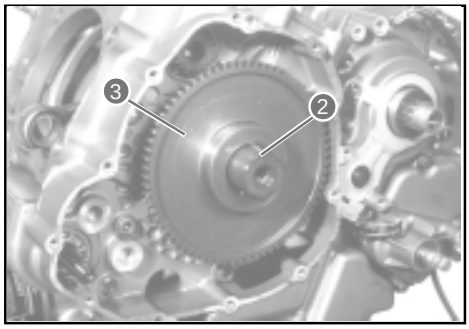

- Remove no. 1 valve motion idler gear/sprocket **4** and timing chain **5**.

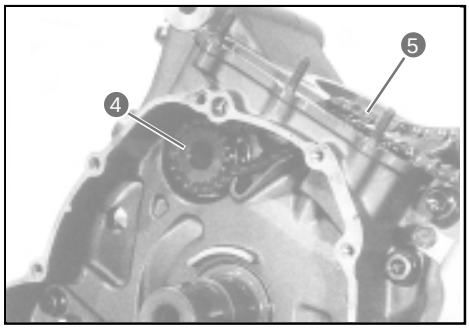

- Remove the gearbox cover bolts and clamp **6**.
- Remove gearbox cover **7**.

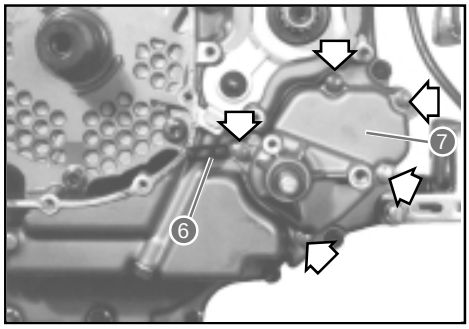

- Remove dowel pins **8** and gasket **9**.

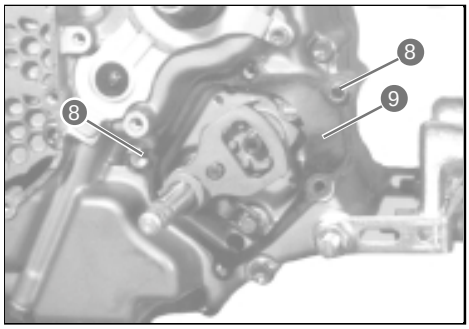

Downloaded from www.Manualslib.com manuals search engine

- Pull out gear shaft/arm **1** with washers **2**.

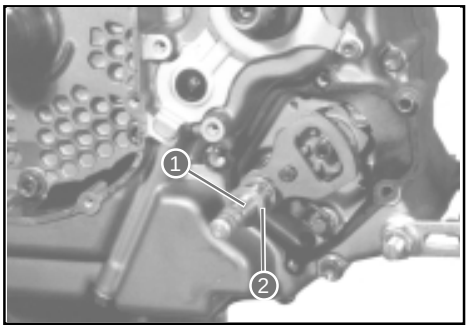

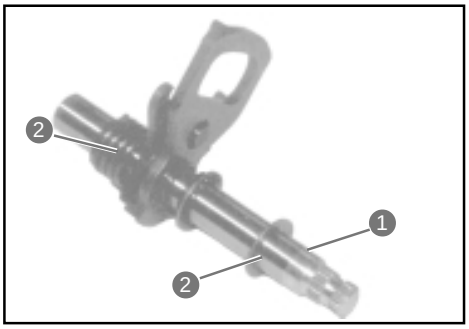

- Remove gear preselector plate **3**.
- Remove gear preselector stop **4** with the related spring and washer.
- Remove gear arm stop bolt **5**.

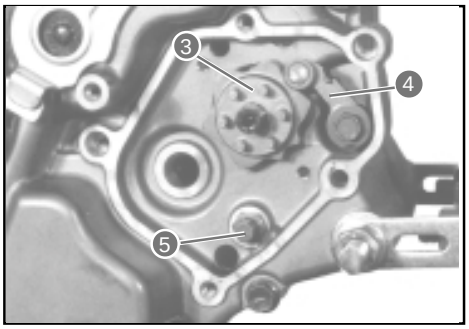

- Remove oil seal retainer **6** and engine sprocket spacer **7** with the O-ring.

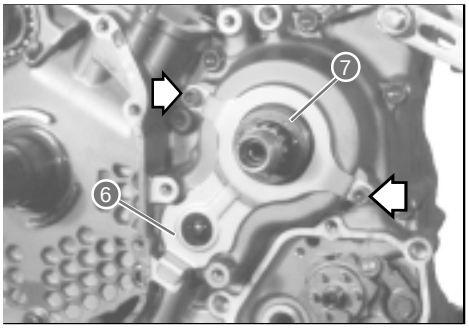

- Remove oil seal retainer **8** and oil pressure switch **9**.

Specific tool: 800096659 Oil filter spanner

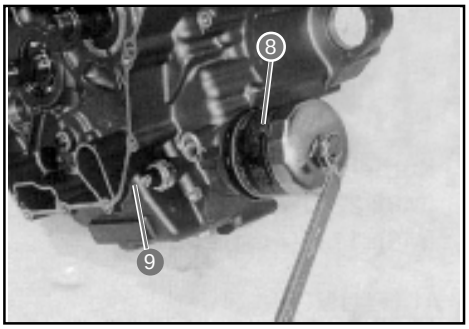

Downloaded from www.Manualslib.com manuals search engine

- Remove the crankcase bolts.

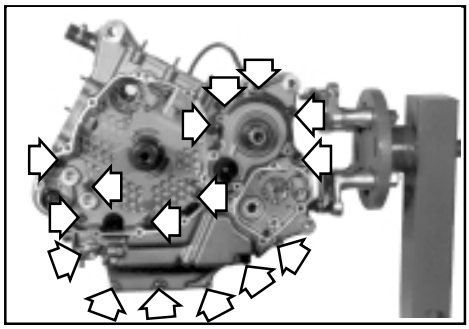

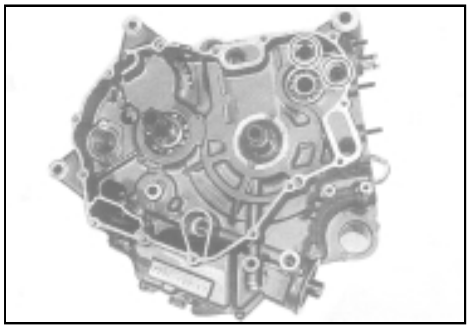

- Separate the crankcase into two parts, left and right, using the specially designed tool.

Specific tool: 800096674 Crankcase separator

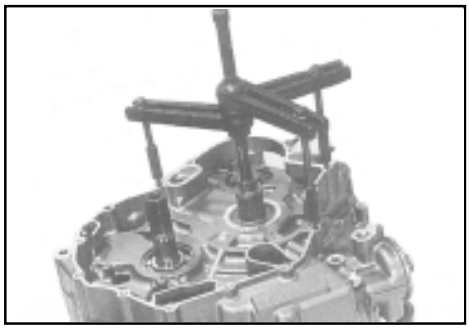

** Fit the crankcase separator so that the tool arms are parallel with the crankcase sides.*
** The crankshaft and the transmission components must remain in the left crankcase half.*
** When separating the crankcase, tap the countershaft end with a plastic mallet.*

- Remove dowel pins **1**.
- Remove crankshaft **2** along with thrust shim **3**.

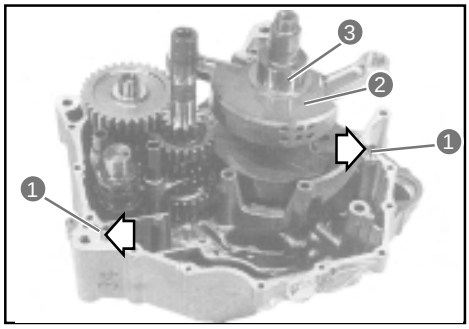

Refer to page D-153 for instructions on how to service the crankshaft and the connecting rods.

- Remove gear change fork shafts **4** and gear change forks **5**.
- Remove gear preselector **6**.
- Remove driving shaft assembly **7** and countershaft assembly **8**.

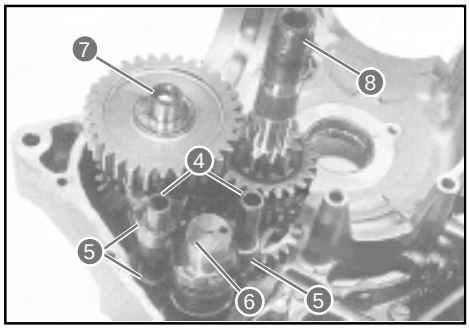

Refer to page D-153 for instructions on how to service the driving shaft and the countershaft.

Downloaded from www.Manualslib.com manuals search engine

- Remove O-ring **1**, oil pump **2** and plate **3**.

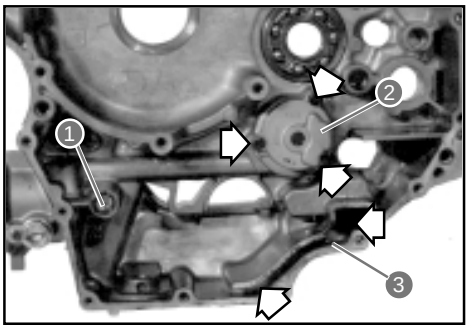

Refer to page D-170 for details of how to inspect the oil pump.

- Remove reed valve **4**.

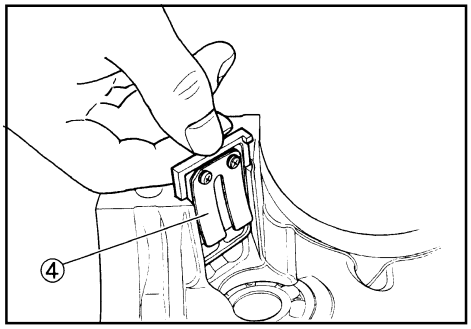

- Remove piston cooling oil nozzles **5** from the left and right crankcase halves.

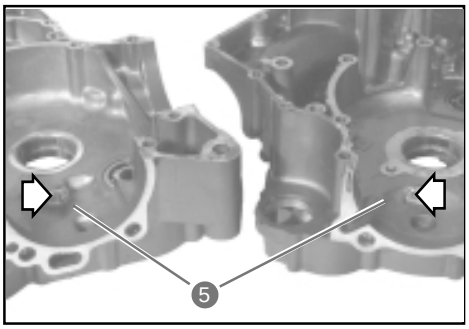

- Remove the oil seals using the specially designed tool.

Specific tool: 800096653 Gasket separator

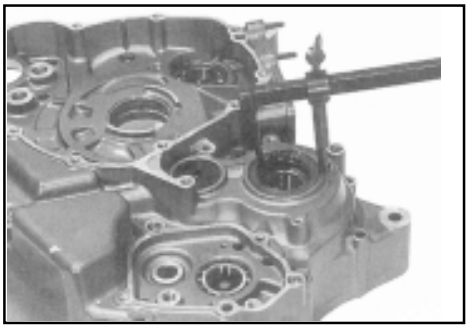

Replace the removed oil seal with a new one.

- Remove the oil jet from the left crankcase half.

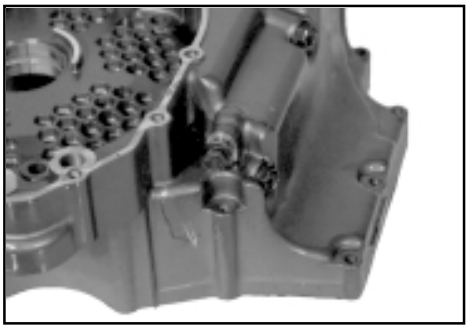

Downloaded from www.Manualslib.com manuals search engine

- Remove the bearing setscrews.

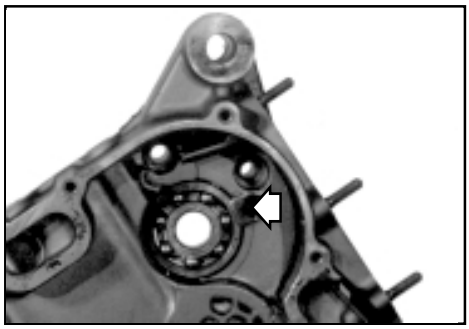

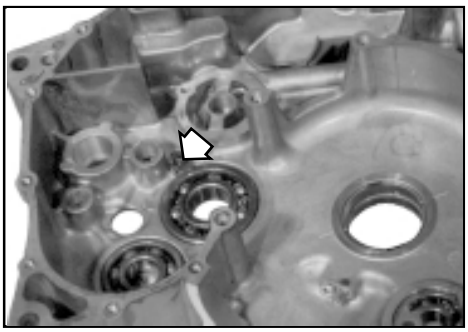

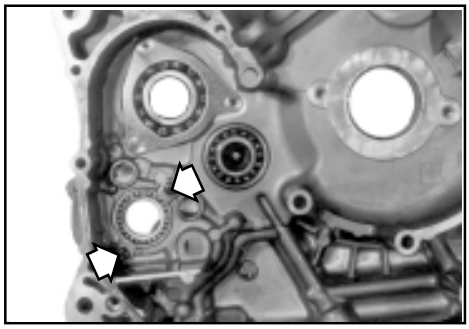

- Remove bearings **1**, **2**, **3**, **4**, **5** and **6** using the special tools.

Specific tools:
800096676: Bearing extractor (for 1)
800096683: Sliding shaft (for 1)
800096655: Bearing separator (for 2,4,5)
800096656: Bearing separator (for 3,6)

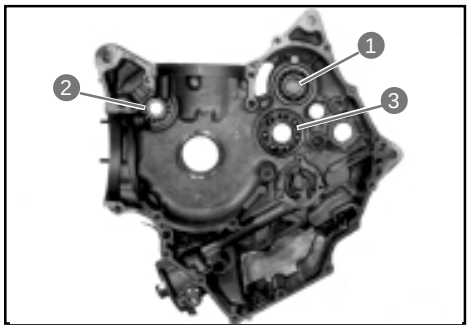

Replace the removed bearings with new ones.

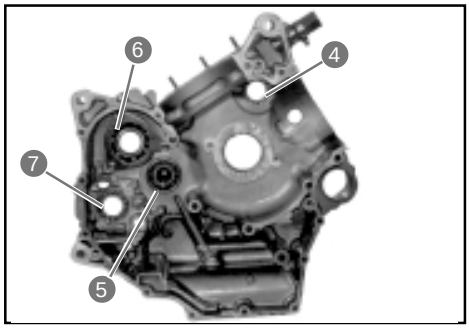

- Remove bearing **7**.

Refer to pages D-163 to D-167 for directions on how to remove and install the crankshaft bearings.

Downloaded from www.Manualslib.com manuals search engine

ASSEMBLING THE ENGINE

The engine is reassembled by following the disassembling procedure in reverse order. However, a number of operations require special instructions or precautions.

Apply engine oil over all movable and sliding parts before reassembly.

- Fit bearings **1**, **2**, **4**, **5**, **6** and **7** in the crankcase using the specially designed tools.

Specific tools:
800096873: Bearing installer (for 1,6,7)
800096657: Bearing installer (for 2,4,5)

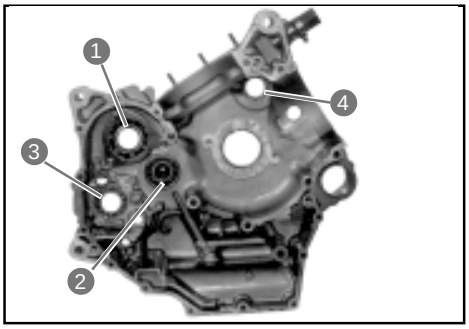

- Fit bearing **3** in the crankcase by hand.

*The sealed side of bearings **1** and **2** must face outwards.*

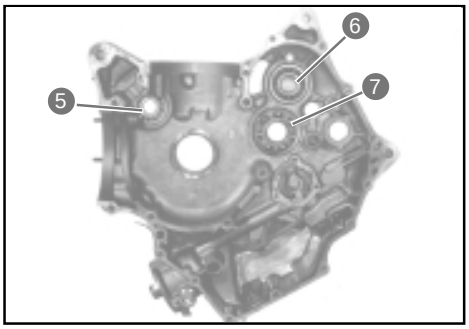

- Fit the bearing retainers.

Apply a small quantity of specific product to the bearing setscrews and then tighten with the prescribed torque.

Specific product: LOC-TITE 243
Tightening torque:
Bearing setscrew **8 N.m (0,8 kg-m) (5.84 lb·ft)**

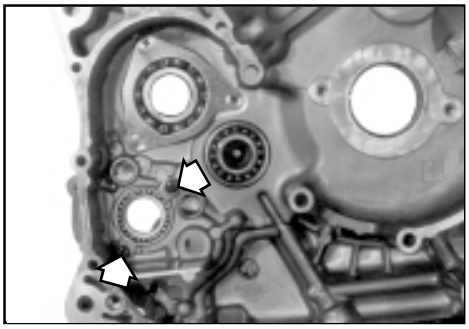

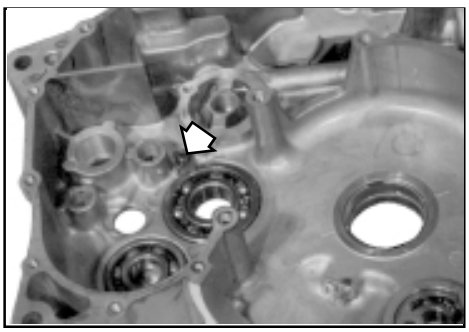

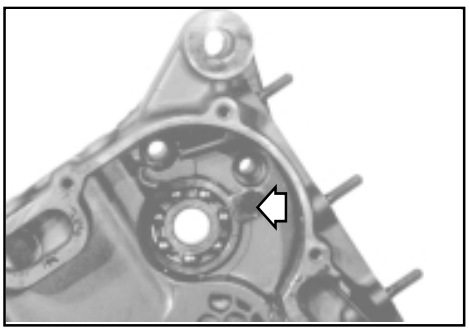

Downloaded from www.Manualslib.com manuals search engine

- Fit oil seals **1** and **2** in the crankcase using the specially designed tools.
- Grease the oil seal lips.

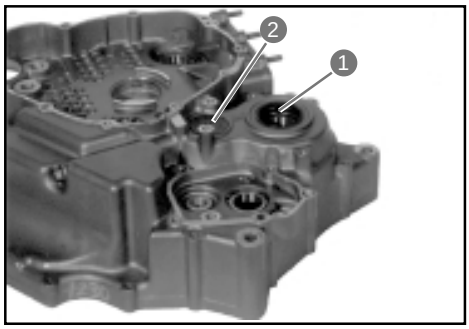

Specific tools:
800096873: Bearing installer (for1)
800096657: Bearing installer (for2)

Specific product: AGIP GREASE 30

- Fit new O-rings to the cooling oil nozzle of each piston.

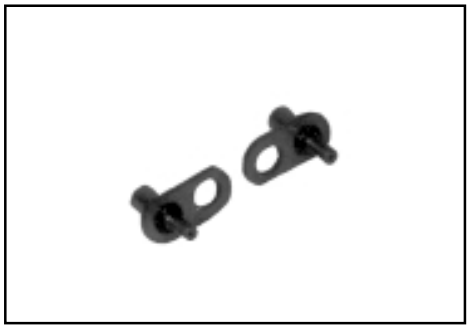

To prevent oil leakage, always use new O-rings.

Apply a small quantity of specific product to the bolts and then tighten with the prescribed torque.

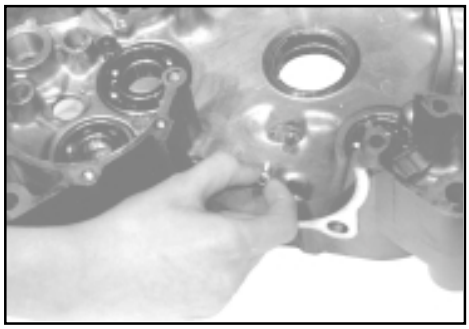

Specific product: LOC-TITE 243
Tightening torque:
Piston cooling oil nozzle bolt **8 N.m (0,8 kg-m) (5.84 lb·ft)**

- Fit new O-rings to the oil jet.

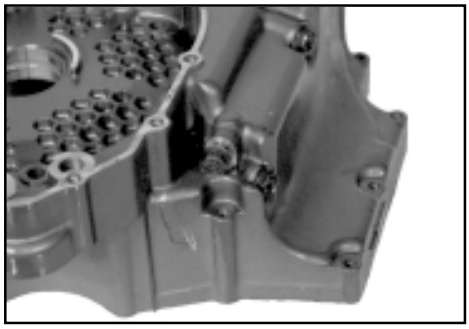

To prevent oil leakage, always use new O-rings.

Apply engine oil to the O-ring when installing the oil jet.

- Install the oil jet in the left crankcase half.
- Tighten the oil gallery plug with the specified torque.

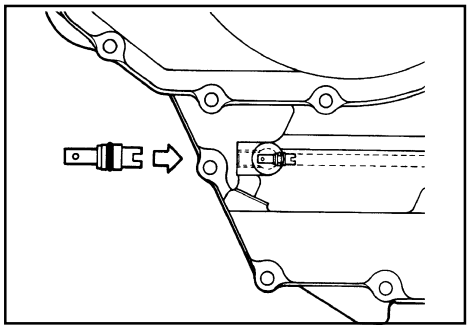

Specific product: Oil gallery plug (M8): **10 N.m (1,0 kg-m) (7.3 lb·ft)**

Downloaded from www.Manualslib.com manuals search engine

- Fit thrust shim **1** to the crankshaft.

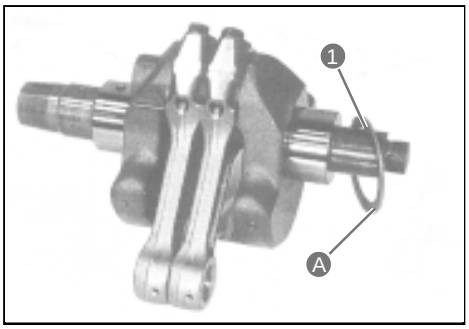

** Grooved side **A** of thrust shim **1** must face the crankshaft web side.*
** The thrust shim is selected according to the crankshaft thrust clearance (refer to pages D-167 -169).*

- Fit the crankshaft in the left crankcase half.

Apply a film of molybdenum bisulphide to the crankshaft bearings and to the shim.

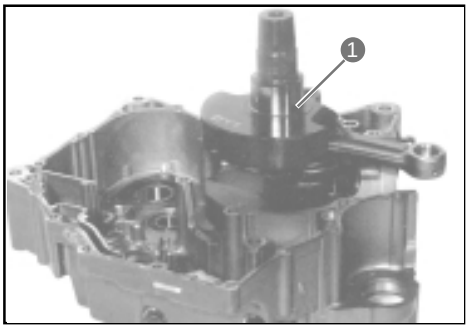

Specific product MOLIKOTE

Never strike the crankshaft with a plastic mallet when installing it in the crankcase. Installation of the crankcase in the left crankcase half should be an easy operation.

- Fit countershaft assembly **2** and driving shaft assembly **3**.
- Fit washer **4** to the driving shaft.

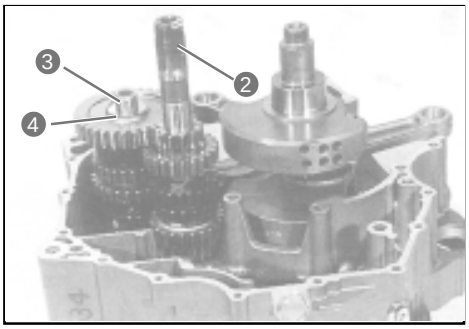

- Install gear change forks **5**, **6** and **7**, gear change fork shafts **8** and **9**, and gear preselector **10**.

5 5th speed driven gear
6 6th speed driven gear
7 3rd/4th speed driving gear

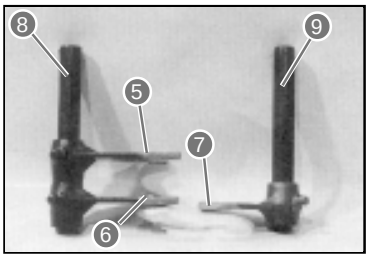

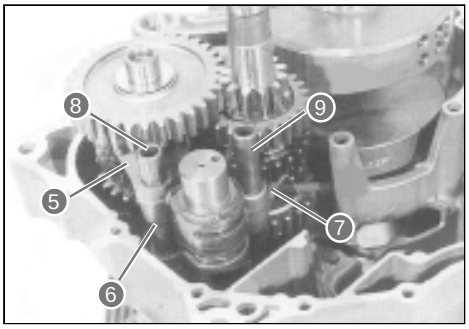

- Insert dowel pins **11** in the left crankcase half.

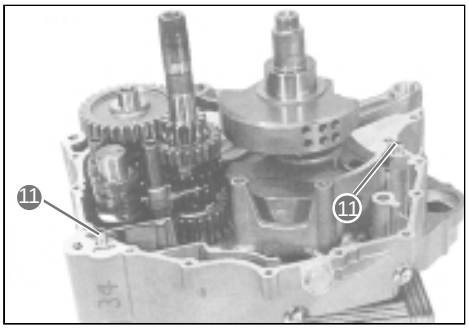

Downloaded from www.Manualslib.com manuals search engine

- Fit plate **1** and oil pump **2** to the right-hand crankcase half.

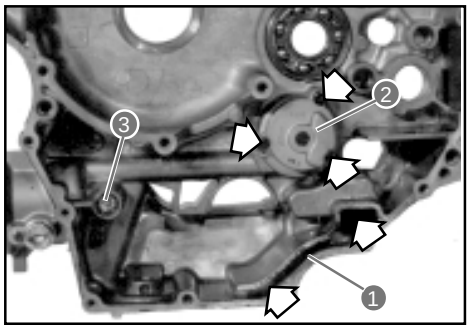

Apply a small quantity of specific product to the oil pump fastening bolts and to the plate bolts, and then tighten with the prescribed torques.

Specific product: LOC-TITE 243
Tightening torques:

Oil pump fastening bolt	**10 N.m (1,0 kg-m) (7.3 lb·ft)**
Plate bolt	**10 N.m (1,0 kg-m) (7.3 lb·ft)**

- Fit a new O-ring **3**.

Grease the O-ring
Specific product: AGIP GREASE 30

Use a new O-ring to prevent leakage.

- Fit reed valve **4** as shown in the figure.

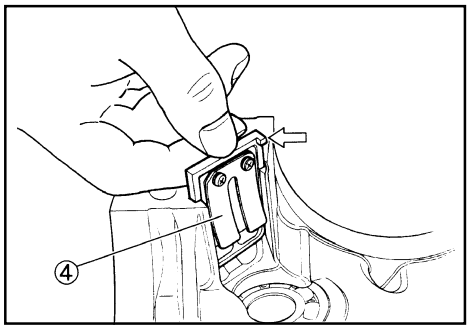

- Clean the mating surfaces of the left and right crankcase halves.
- Apply specific product to the mating surface of the left crankcase half (see page D-44).

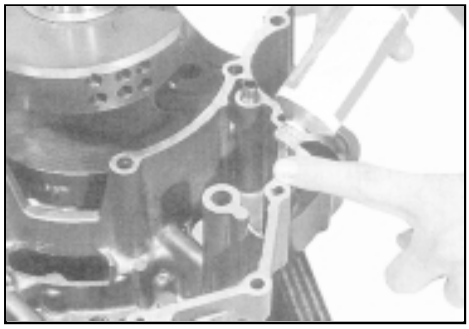

Specific product: RHODORSEAL 5552

The RHODORSEAL 5552 sealant is used as follows:
* *Remove all traces of moisture, dust and other foreign materials from the mating surfaces.*
* *Apply an even film and join the two crankcase halves within a few minutes.*
* *Take special care in not applying the RHODORSEAL 5552 sealant to the oil hole, the oil groove and the bearing.*
* *Apply the product to distorted surfaces as it forms a relatively thick film.*

Downloaded from www.Manualslib.com manuals search engine

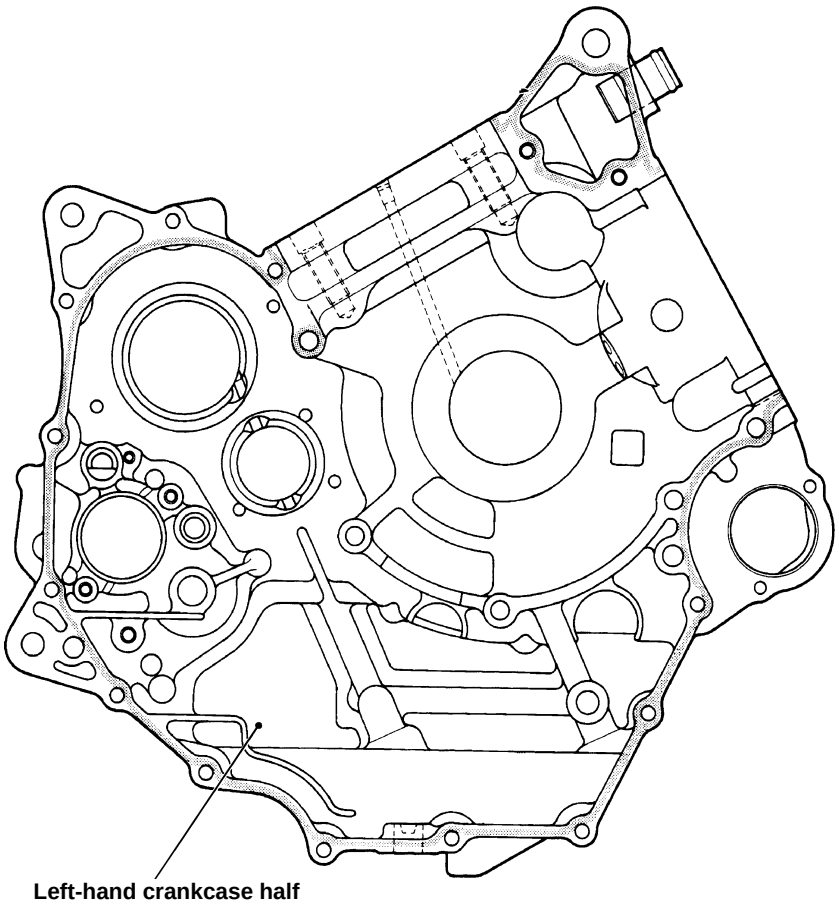

- When fastening the left and right crankcase halves, tighten each bolt gradually to equalize the pressure. Tighten all fastening bolts with the specified torques.

Tightening torques:
Crankcase bolts (M8) 22 N.m (2,2 kg-m) (16.06 lb·ft)
(M6) 11 N.m (1,1 kg-m) (8.03 lb·ft)

When assembling the left and right crankcase halves, take care not to drop the O-rings into the crankcase.

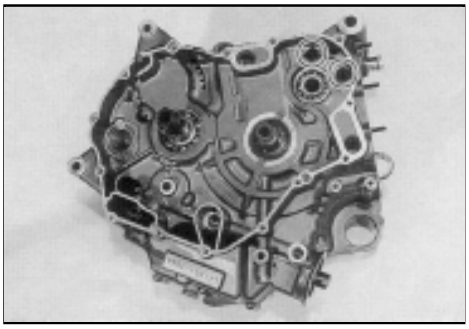

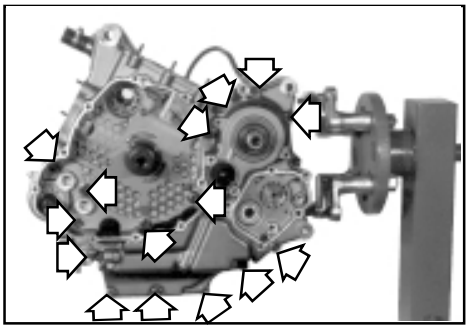

Downloaded from www.Manualslib.com manuals search engine

After tightening the crankcase bolts, ensure that the crankshaft, the driving shaft and the countershaft can rotate freely.

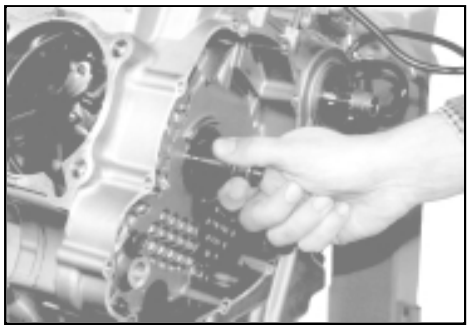

- Fit a new O-ring in engine sprocket spacer **1**.

Use a new O-ring to prevent oil leakage.

- Fit engine sprocket spacer **1** to the driving shaft.

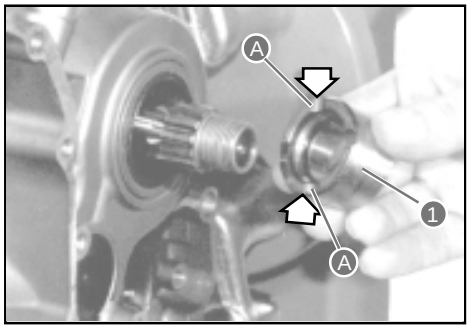

** Grooved side **A** of the engine sprocket spacer must face the crankcase side.*
** Grease the lips of the oil seal and the O-ring.*

Specific product: AGIP GREASE 30

- Apply THREEBOND TB1215 to the threaded part of oil pressure switch **2** and tighten with the specified torque.

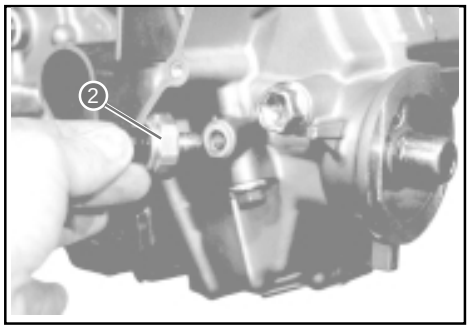

Specific product: THREEBOND TB 1215
Tightening torque:
Oil pressure switch **14 N.m (1,4 kg-m) (10.22 lb·ft)**

- Apply a film of engine oil to the oil filter gasket before installation.
- Install the oil filter by rotating it manually until the filter gasket comes into contact with the mounting surface.

Specific tool: 800096659: Oil filter spanner

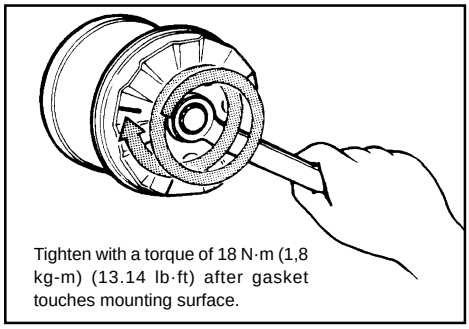

To ensure proper tightening of the filter, use the specially designed tool. Do not tighten the filter manually.

Downloaded from www.Manualslib.com manuals search engine

- Apply a small quantity of specific product to gear arm stop bolt **1** and then tighten with the specified torque.

Specific product: LOC-TITE 270
Tightening torque:
Gear arm stop bolt 23 N.m (2,3 kg-m) (16.79 lb·ft)

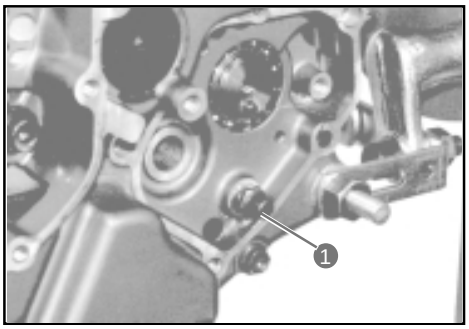

- Fit gear preselector stop **2**, the related bolt **3**, washer **4** and return spring **5**.

*Apply a small quantity of specific product to gear preselector stop bolt **3** and then tighten with the specified torque.*

Specific product: LOC-TITE 243
Tightening torque:
Gear preselector stop bolt 10 N.m (1,0 kg-m) (7.3 lb·ft)

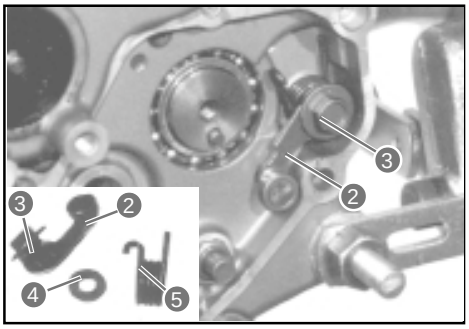

- Ensure that the gear preselector stop moves properly.
- Check the neutral position.
- Fit the gear preselector stop plate after aligning preselector pins **A** with plate holes **B**.

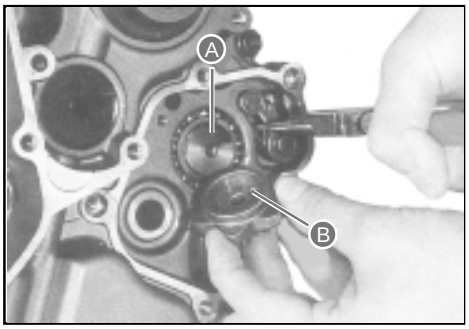

- Apply a small quantity of specific product to gear preselector stop plate bolt **6** and then tighten with the specified torque.

Specific product: LOC-TITE 243
Tightening torque:
Gear preselector stop plate bolt 10 N.m (1,0 kg-m) (7.3 lb·ft)

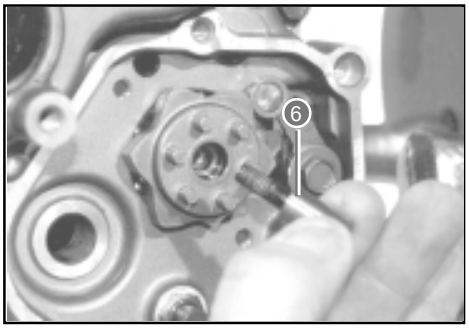

- Fit gear shaft/arm **7** and washer **8** as shown in the figure.

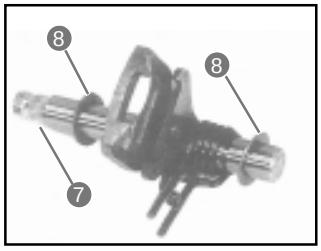

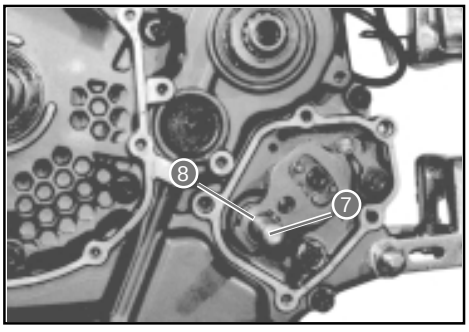

Downloaded from www.Manualslib.com manuals search engine

• Fit dowel pins **1** and gasket **2**.

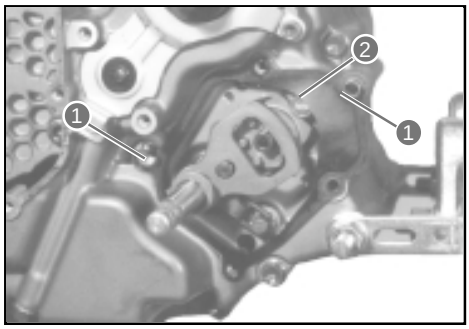

Use a new gasket to prevent oil leakage.

• Fit the gearbox cover.

*Fit the new sealing washer on bolt **3** and the clamp on bolt **4** as shown in the figure.*

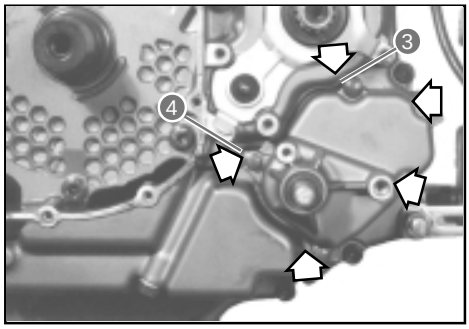

Fit a new sealing washer to prevent oil leakage.

Grease the oil seal lip before fitting the gearbox cover.

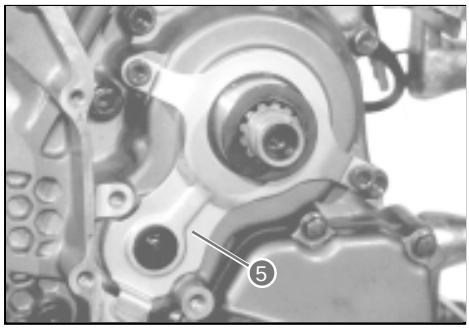

Specific product: AGIP GREASE 30

• Install oil seal retainer **5**.

• Install no. 1 valve motion idler gear/sprocket **6** and timing chain **7**.

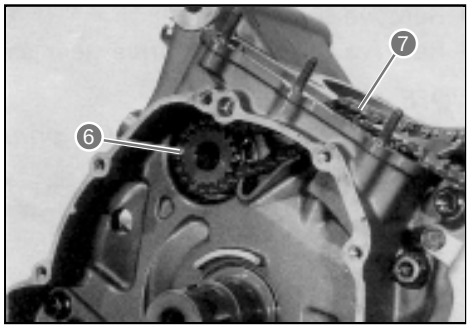

• Degrease the tapered portion of the generator rotor assembly and the crankshaft. Remove the oil and grease with a nonflammable solvent and then dry the surfaces completely.

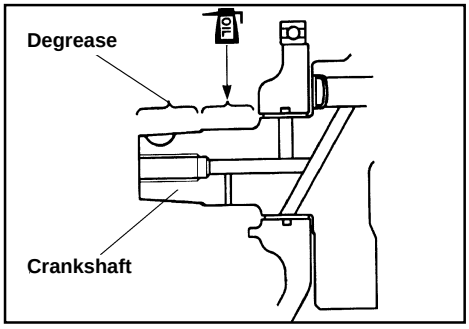

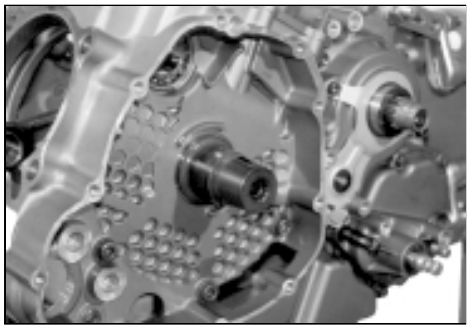

Downloaded from www.Manualslib.com manuals search engine

- Fully insert key **1** into its slot on the crankshaft.

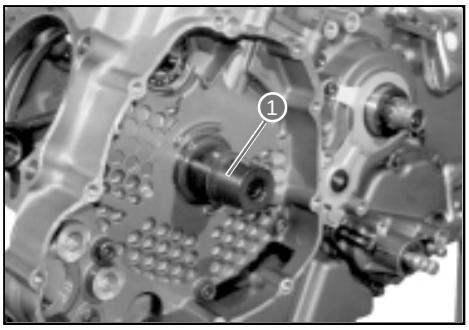

- Fit generator rotor assembly **2** and driven starting gear **3** to the crankshaft.
- Apply specific product to rotor bolt **4** and then fit it.

Specific product: LOC-TITE 270

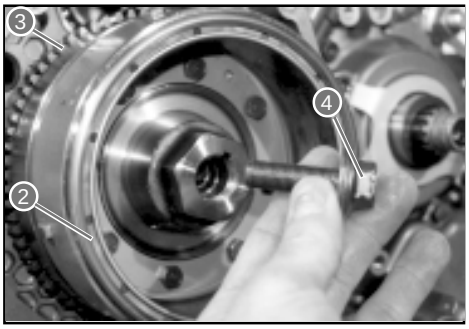

- While holding the generator rotor with a 36-mm spanner, tighten its bolt 4 with the specified torque.

Tightening torque:
Rotor bolt 160 N.m (16,0 kg-m) (116.8 lb·ft)

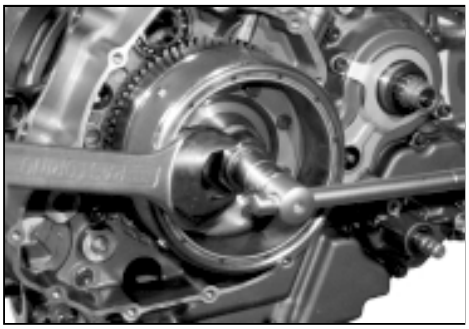

- Fit thrust washer **5** to the crankshaft.

*Bevelled side **A** of thrust washer **5** must face the crankcase side.*

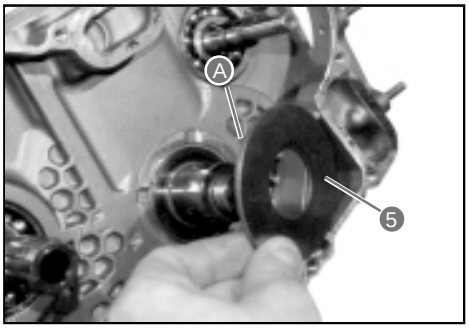

- Fully insert key **6** into its slot on the crankshaft.

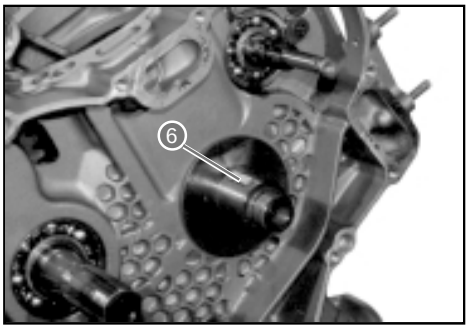

Downloaded from www.Manualslib.com manuals search engine

- Install primary driving gear assembly **1** and washer **2**.

*The convex side of washer **2** must face outwards.*

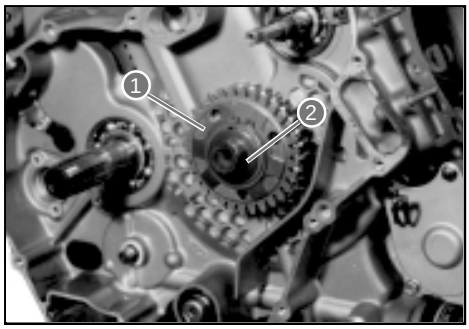

- Fit the primary driving gear nut.

** This nut has a left-hand thread.*
** Mark "L" **A** on the nut must face outwards.*

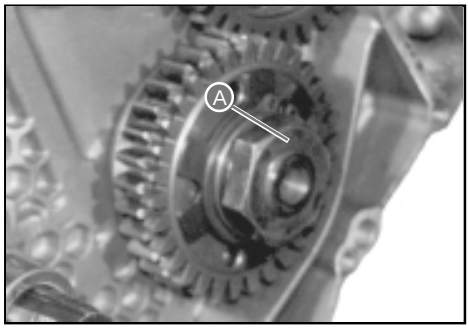

- While holding the generator rotor with a 36-mm spanner, tighten the primary driving gear nut with the specified torque.

Tightening torque:
Primary driving gear nut **95 N.m (9,5 kg-m) (69.35 lb·ft)**

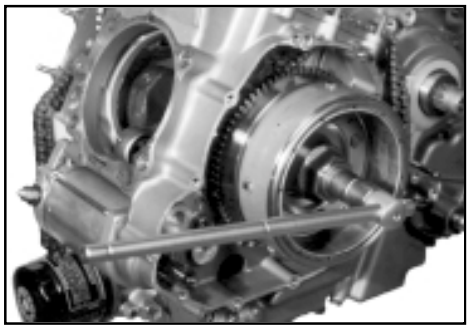

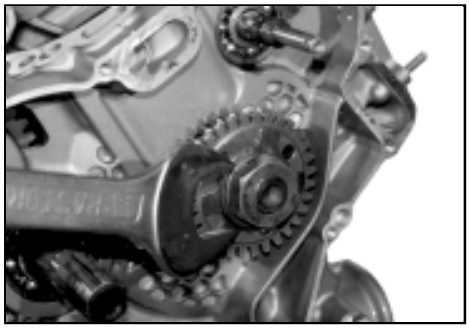

- Insert a bar of suitable size into the holes of the primary driving gears to align the teeth of the scissors gears.
- Fit timing chain **3** and no. 1 valve motion idler gear/sprocket **4**.

*Align punched marks **B** on the no. 1 valve motion idler gear/sprocket and the primary driving gear to facilitate the subsequent installation of the no. 2 valve motion idler gear/sprocket (see pages D-83 to D-88).*

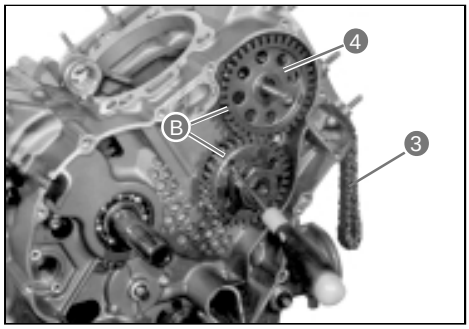

Downloaded from www.Manualslib.com manuals search engine

- Insert key **1** as shown in the figure.

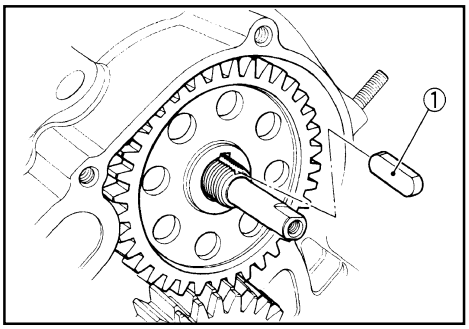

- Fit no. 1 valve motion idler gear/sprocket nut **2** with the related washer.
- While holding the crankshaft on the generator rotor, tighten no. 1 valve motion idler gear/sprocket nut **2** with the specified torque.

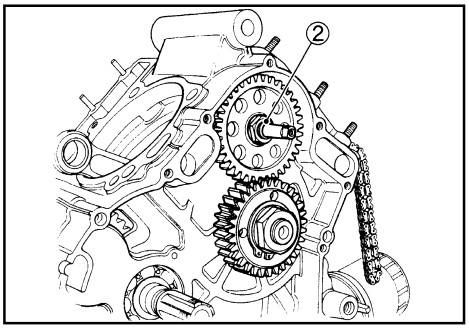

Tightening torque:

No. 1 valve motion idler gear/sprocket nut

70 N.m (7,0 kg-m) (51.1 lb·ft)

Before tightening the no. 1 valve motion idler gear/sprocket nut, be sure to engage the front and rear timing chains with their respective sprockets.

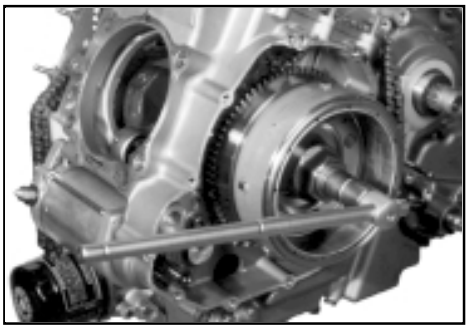

- Install spring **3** and neutral switch contact **4**.

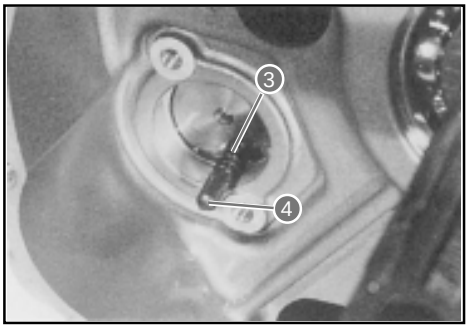

- Install neutral switch assembly **5** and cable guide **6** as shown in the figure.

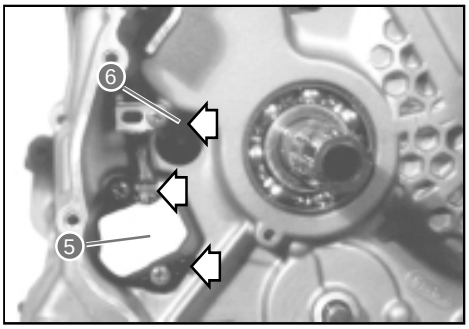

Apply a small quantity of specific product to the neutral switch screw and the cable guide screw.

Specific product: LOC-TITE 243

Downloaded from www.Manualslib.com manuals search engine

- Install oil sump filter **1** and oil pressure regulator **2**.

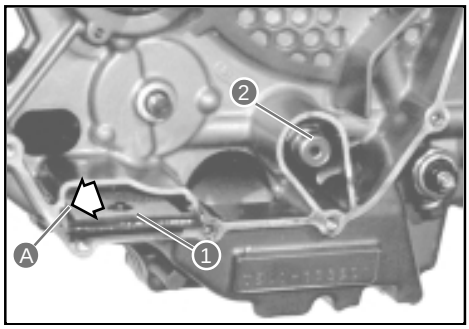

*Oil sump filter projection **A** must face downwards.*

- Tighten oil pressure regulator **2** with the specified torque.

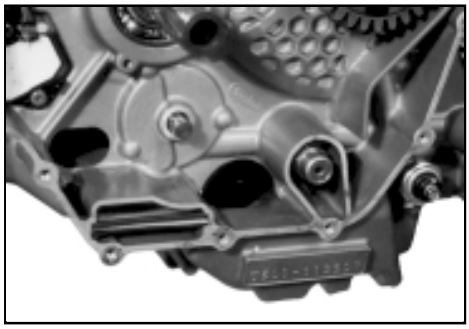

Tightening torque:
Oil pressure regulator **28 N.m (2,8 kg-m) (20.44 lb·ft)**

- Fit washer **3**, pin **4**, oil pump driven gear **5**, and circlip **6** to the oil pump shaft.

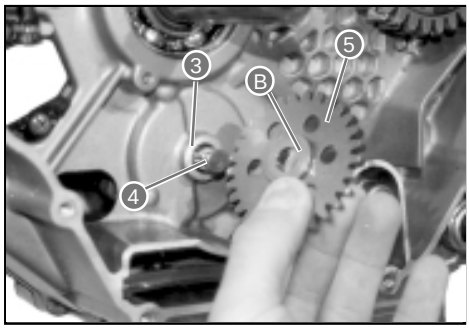

*Projection **B** of oil pump driven gear **5** must face the crankcase side.*

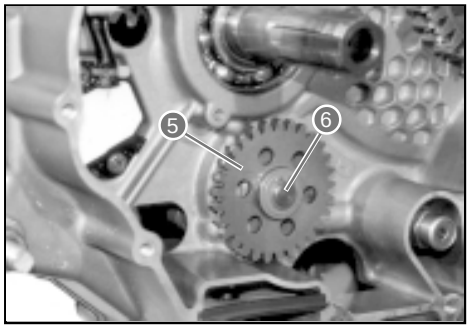

- Fit the thrust washer on the countershaft.

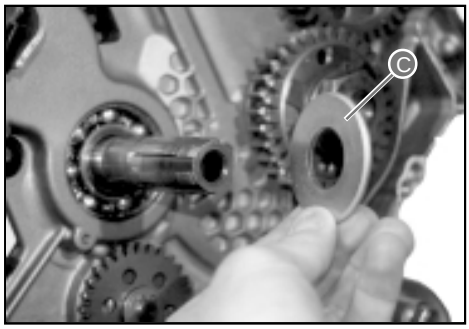

*Bevelled side **C** of the thrust washer must face the crankcase side.*

Downloaded from www.Manualslib.com manuals search engine

- Fit needle roller bearing **1** and collar **2** to the countershaft and lubricate them with engine oil.

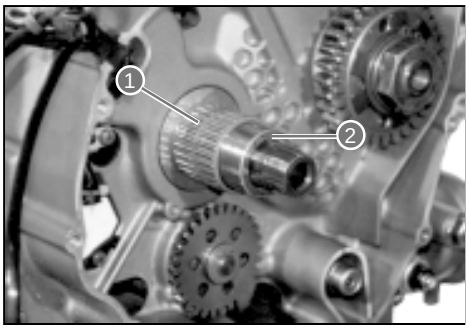

- Fit primary driven gear assembly **3** to the countershaft.

** When installing primary driven gear assembly **3**, align the teeth of the primary gears by inserting a bar of suitable size into their holes.*
** Be sure to engage the oil pump driving and driven gears with the primary driving and driven gears.*
** When installing the oil pump driving gear, align pin **A** with slot **B** and turn oil pump driving gear convex side **C** to the primary driving gear.*

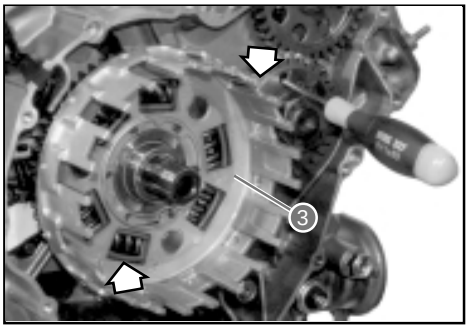

- Fit thrust ring washer **4**.

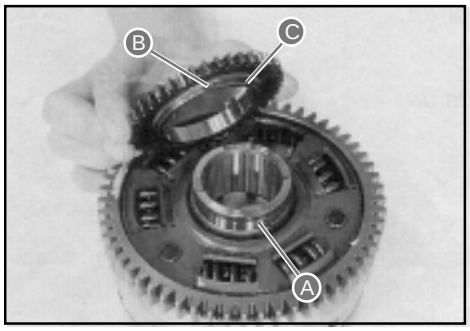

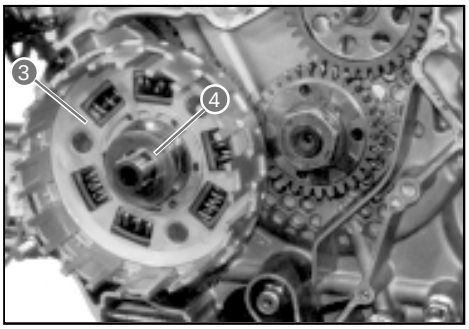

- Fit clutch driven cam **5** on clutch drum **6**.

*Align punched mark **D** on the clutch driven cam with punched mark **E** on the clutch drum.*

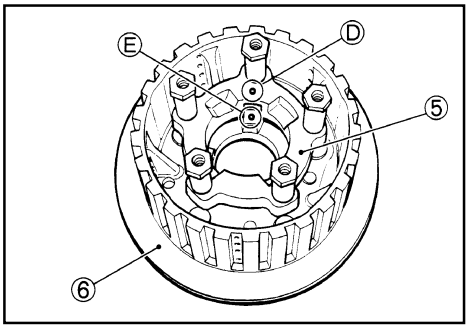

When fitting the clutch spring support bolts, apply specific product and tighten with the specified torque.

Specific product: LOC-TITE 270
Tightening torque:
Clutch spring bolt **11N.m (1,1 kg-m) (8.03 lb·ft)**



Downloaded from www.Manualslib.com manuals search engine

- Fit clutch driving cam **1** on clutch drum **2**.

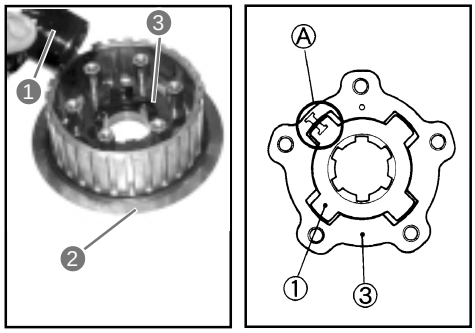

*Align "I" mark **A** on the clutch driving cam with "I" mark **A** on driven cam **3**.*

- Fit clutch drum **2** with driving cam **1** and driven cam **3** to the countershaft.

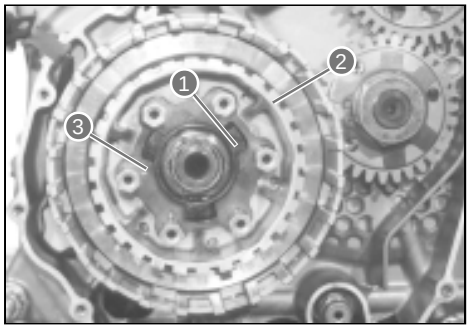

These three parts must be replaced as a set.

- Fit washer **4** to the countershaft.

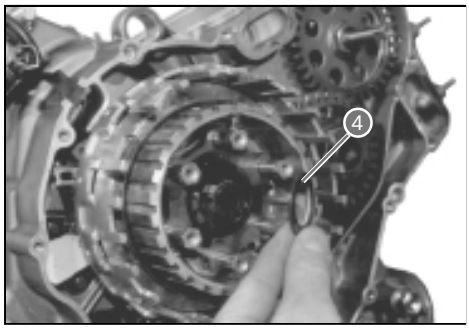

The convex side of the washer must face outwards.

- Tighten clutch drum nut **5** with the specified torque using the specially designed tool.

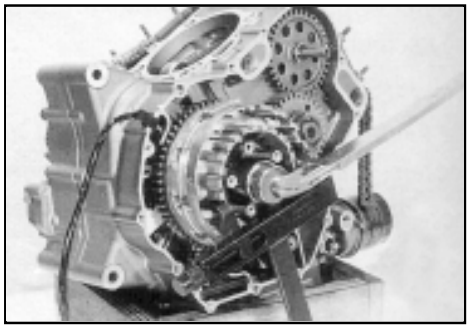

Tightening torque:
Clutch drum nut 100 N·m (10,0 kg-m) (73 lb·ft)
Specific tool: 800096675 - Clutch hub sleeve support

- Lock clutch drum nut **5** with a punch.

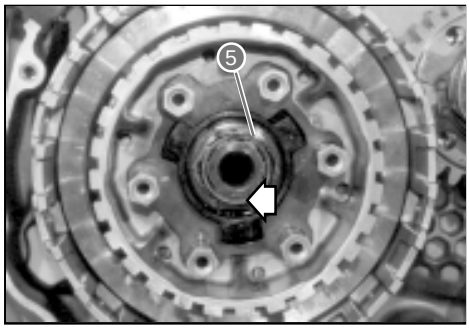

Downloaded from www.Manualslib.com manuals search engine

- Correctly fit spring washer seat **1** and spring washer **2** to the clutch drum.

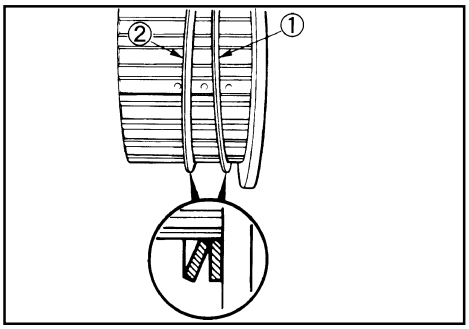

- Insert the clutch driving and driven plates one by one into the clutch drum in the order shown in the figure. Insert no.2 driving plate **B** first. (There are two types of driving plates, no. 1 and no. 2, differing in inside diameter.)

Insert the outermost no. 1 driving plate into the clutch bell housing grooves as shown in the figure.

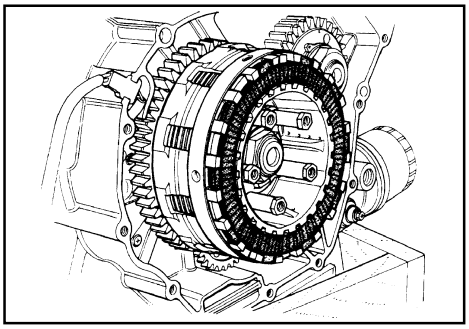

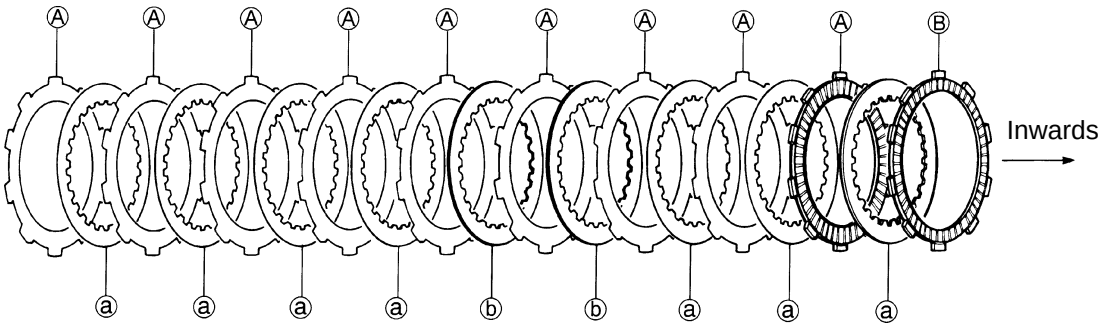

DRIVING PLATES
A No. 1 driving plate (inside diameter): 101 mm (3.976 in) 9 pcs
B No. 2 driving plate (inside diameter): 108 mm (4.252 in) 1 pcs

DRIVEN PLATES
Two types of driven plates, no. 1 and no. 2, are used in the clutch system. The two plate types differ in thickness.
a No. 1 driven plate (thickness): 1,6 mm (0.063 in) 7 pcs
b No. 2 driven plate (thickness): 2,0 mm (0.079 in) 2 pcs

Downloaded from www.Manualslib.com manuals search engine

- Fit clutch push rod **1** in the countershaft.

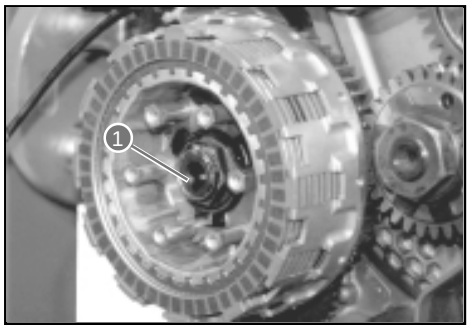

- Fit clutch push rod **2**, bearing **3** and thrust washer **4** to the countershaft.

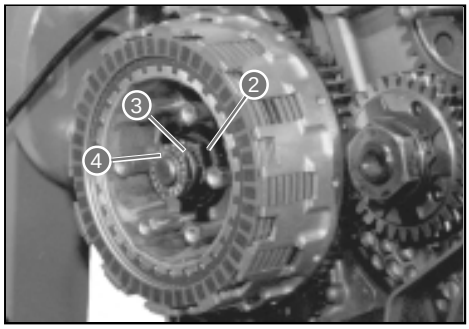

- Place pressure plate **5** on the clutch drum.
- While holding the generator rotor with a 36-mm spanner, tighten the clutch spring fastening bolts with the specified torque following a crisscross pattern (see figure).

Tightening torque:
Clutch spring fastening bolts **10 N.m (1,0 kg-m) (7.3 lb·ft)**

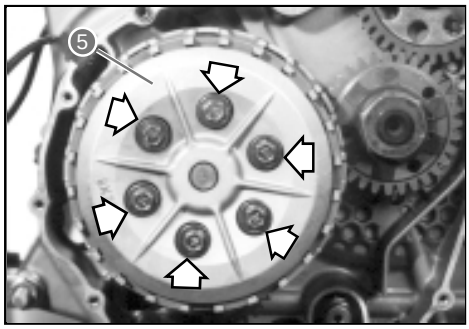

- Install gasket **6** and dowel pins **7**.

Use a new gasket to prevent oil leakage.

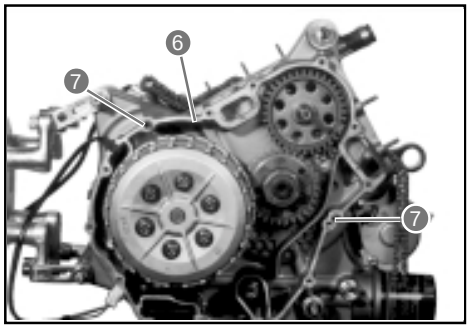

- Grease the oil seal rim on the clutch cover.

Specific product: AGIP GREASE 30

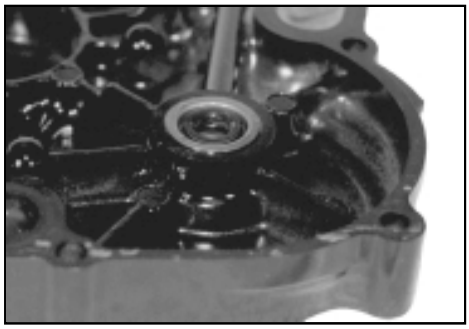

Downloaded from www.Manualslib.com manuals search engine

• Fit the clutch cover.

• To avoid damaging the oil seal lip, cover the edge of the no. 1 valve motion idler gear shaft with a vinyl film or tape A before fitting the clutch cover.
• To prevent damage to the oil seal lip, fit the clutch cover squarely.

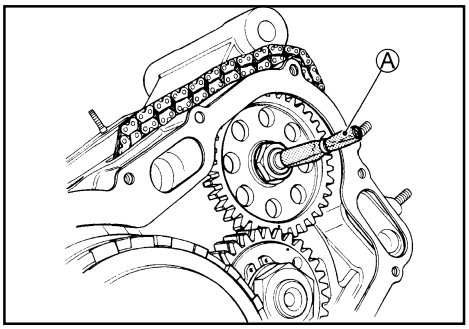

• Remove vinyl film or tape **A** after installing the clutch cover.
• Temporarily tighten the clutch cover bolts.

*Fit the sealing washer on bolt **B** and the clamps on bolts **C** as shown in the figure.*

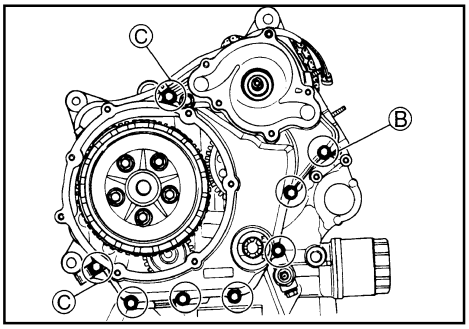

Use a new sealing washer to prevent oil leakage.

• Fit a new O-ring on clutch bell housing cover **1**.

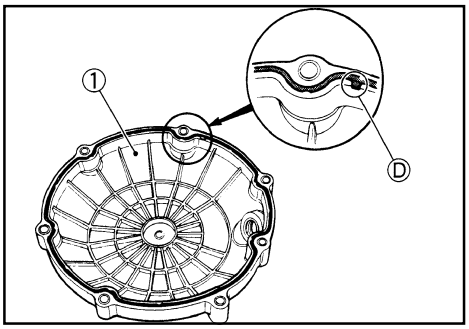

Use a new O-ring to prevent oil leakage.

** After degreasing groove D of clutch bell housing cover 1, correctly position the O-ring in the groove.*
** Apply specific product to the O-ring tab and to clutch bell housing groove D.*

Specific product: RHODORSEAL 5552

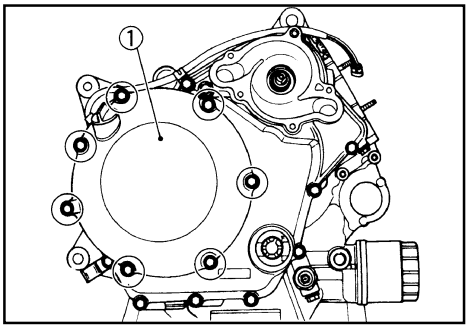

• Grease the O-ring.

Specific product: AGIP GREASE 30
• Fit clutch bell housing cover **1**.
• Temporarily tighten the clutch bell housing bolts.
• Fit washer **2** and rubber seal **3** in the impeller.
• After wiping any oil or grease from mechanical sealing ring **4**, fit it in the impeller.

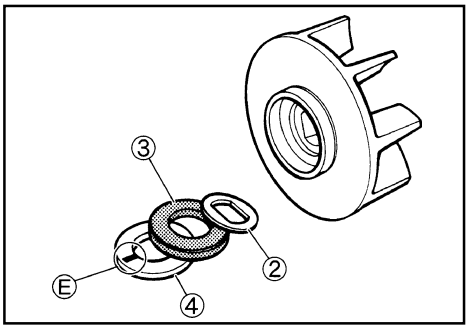

*Marked side **E** of the mechanical sealing ring must face the impeller.*

Downloaded from www.Manualslib.com manuals search engine

- Fit the sealing washer and the washer on impeller fastening bolt **1**.

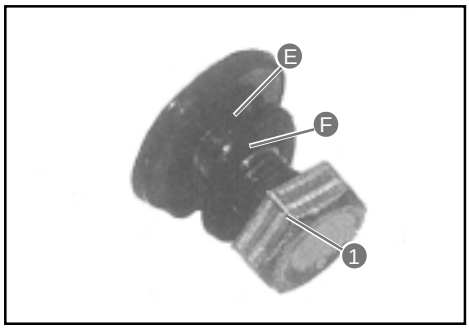

*Sealing washer metal side **E** and washer convex side **F** must face the head of the impeller fastening bolt.*

- Fit impeller **2** and its fastening bolt **1** to the shaft.
- Tighten impeller fastening bolt **1** with the specified torque.

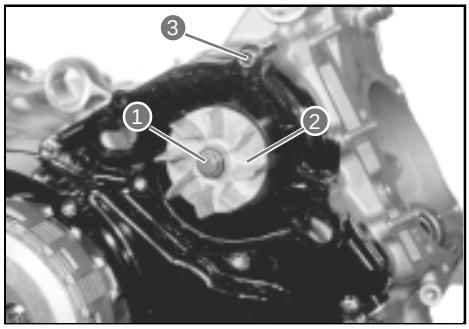

Tightening torque:
Impeller fastening bolt **8 Nm (0,8 kg-m) (5.84 lb·ft)**

- Fit dowel pin **3**.

- Fit a new O-ring on water pump casing **4**.

Use a new O-ring to prevent oil leakage.

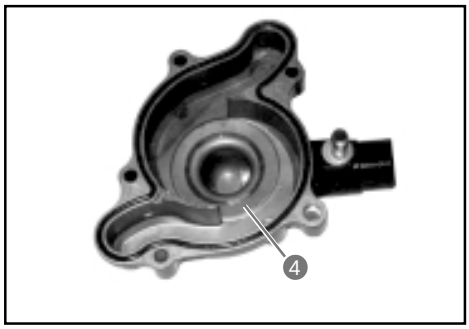

** Grease the O-ring.*

Specific product: AGIP GREASE 30

- Fit water pump casing **4**.
- Temporarily tighten the water pump casing bolts.

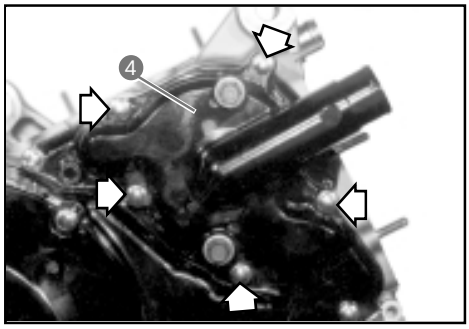

Downloaded from www.Manualslib.com manuals search engine

- Firmly tighten the clutch bell housing cover bolts, the water pump casing bolts, and the clutch cover bolts.

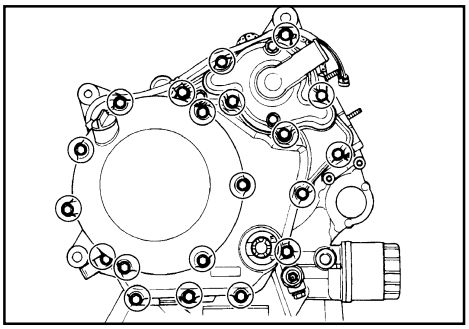

- Fit starting idler gear **1**, spacer **2** and shaft **3**.

*Apply engine oil and specific product to shaft **3**.*

Specific product: MOLIKOTE

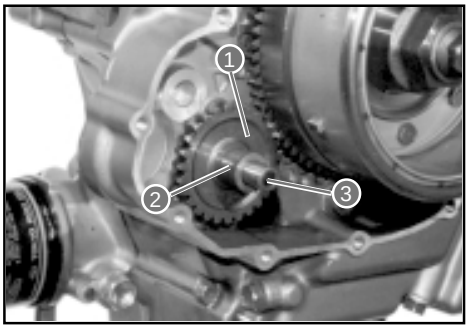

- Fit bushings **4** into the crankcase and the generator cover.

Apply engine oil and specific product inside the bushings.

Specific product: MOLIKOTE

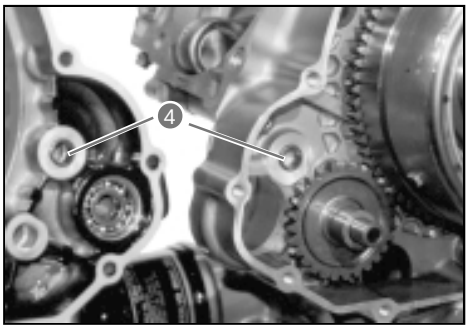

- Install starting torque limiter **5** and fit washers **6**.

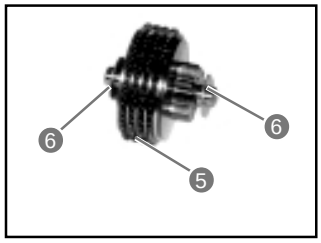

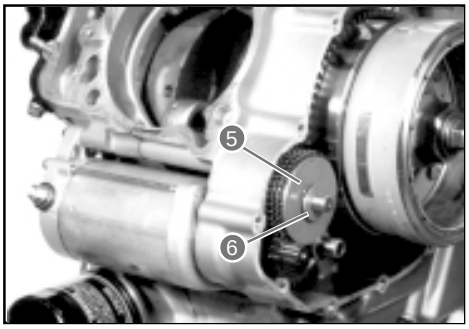

- Fit dowel pin **7** and gasket **8**.

Use a new gasket to prevent oil leakage.

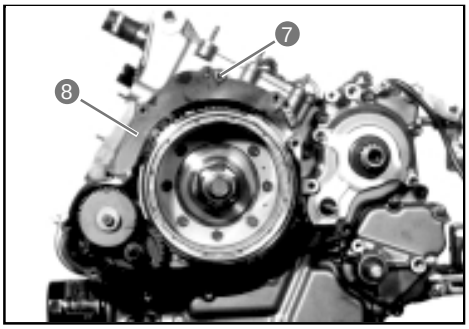

Downloaded from www.Manualslib.com manuals search engine

- Fit the generator cover and firmly tighten its bolts.

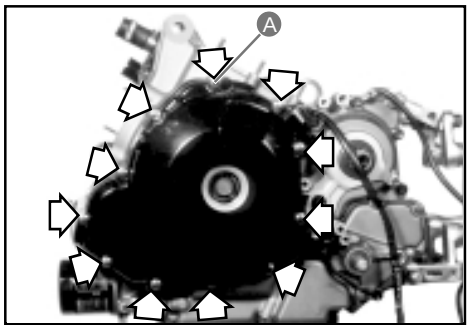

Fit the sealing washer on generator cover bolt **A** *as shown in the figure.*

To prevent oil leakage, use a new sealing washer.

- Fit a new O-ring to the starter motor.

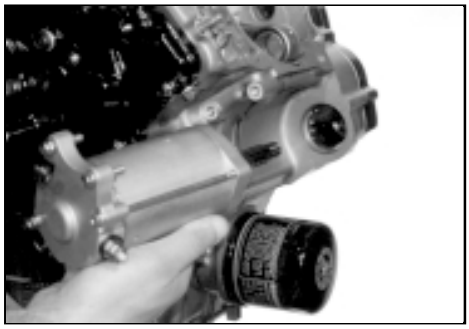

To prevent oil leakage, use a new O-ring.

- Grease the O-ring.

Specific product: AGIP GREASE 30

- Install the starter motor.
- Firmly tighten the starter motor fastening bolts together with clamp **1**.

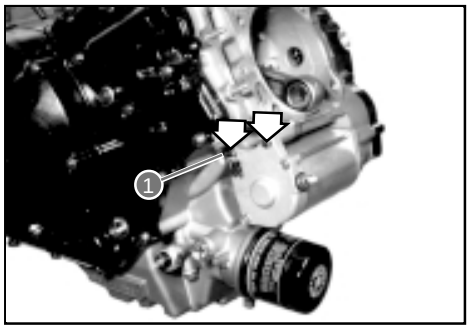

- Fit the piston rings in the following order: scraper ring, 2nd ring, 1st ring.

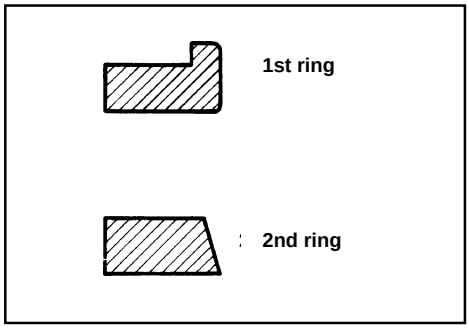

The 1st and 2nd rings differ in profile.

- When fitting the 1st ring on the piston, be sure to turn its convex side upwards.
- The 2nd (middle) ring bears the lettering “RN” stamped on one side. The marked side of the 2nd ring must face upwards.

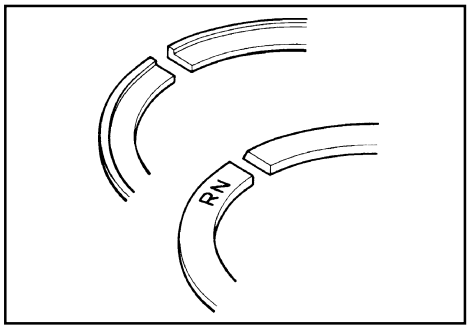

Downloaded from www.Manualslib.com manuals search engine

- The first element of the scraper ring to be inserted into the groove is spacer 1. After fitting the spacer, insert the two side rings 2. The spacer and the side rings do not have an upper or lower side and can be fitted either way.

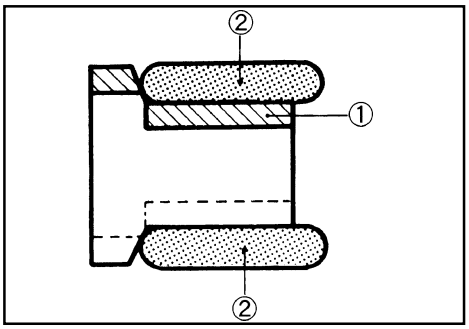

- Position the end gaps of the three piston rings as shown in the figure. Before inserting the pistons into the cylinders, ensure that the ring end gaps are positioned as indicated.

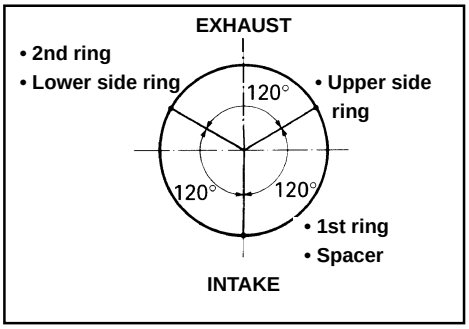

- Apply a small quantity of specific product to each piston pin.

Specific product: MOLIKOTE



*When installing the front and rear pistons, triangular marks **A** must be positioned on the exhaust side.*

- Place a clean rag over the cylinder base to prevent the piston pin circlip from falling into the crankcase.
- Install the front and rear pistons.

Pull up the timing chains, or they may get caught between the crankcase and the valve gear driving sprocket when the crankshaft is turned.

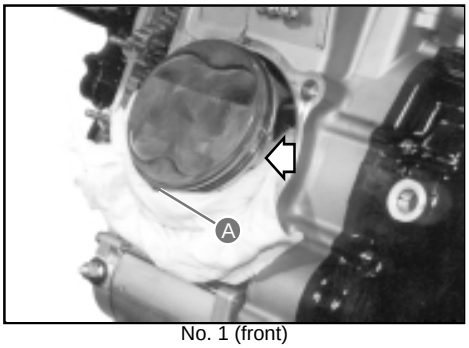

No. 1 (front)

- Fit the piston pin circlips.

Use new circlips to prevent circlip breakage due to bending.

The piston ring end gap is not aligned with the cut in the piston pin bore.

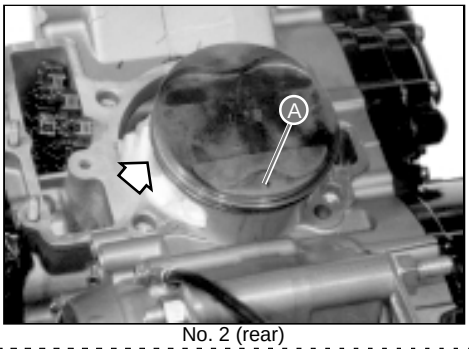

No. 2 (rear)

Downloaded from www.Manualslib.com manuals search engine

- Apply engine oil to the new O-rings.
- Install front and rear oil jets **1** as shown in the figure.

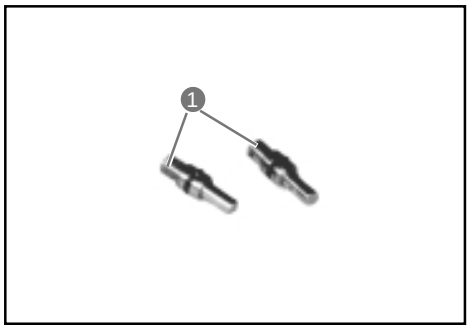

To prevent oil leakage, use new oil rings.

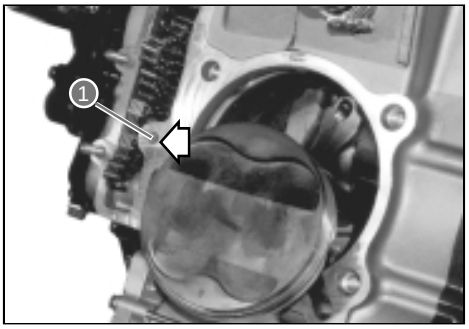

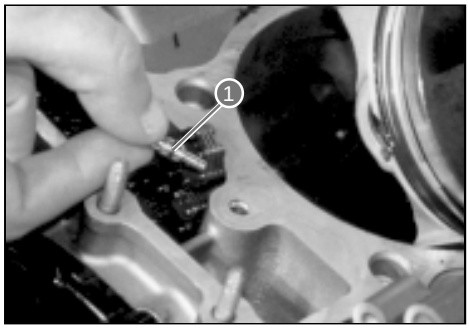

- Apply a film of specific product to the mating surfaces of the left and right crankcase halves as shown in the figure.

*When replacing stud bolt **A**, apply THREEBOND TB 1215 to the thread on the crankcase side.*

Specific product: THREEBOND TB 1215

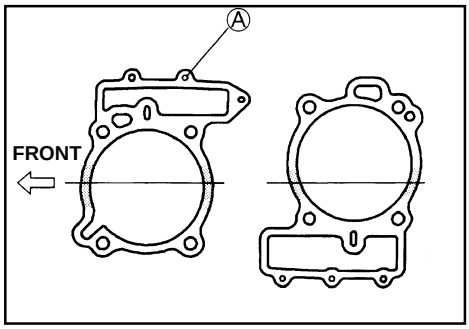

- Fit dowel pins **2** and new gaskets **3** to the crankcase.

To prevent oil leakage, use new gaskets.

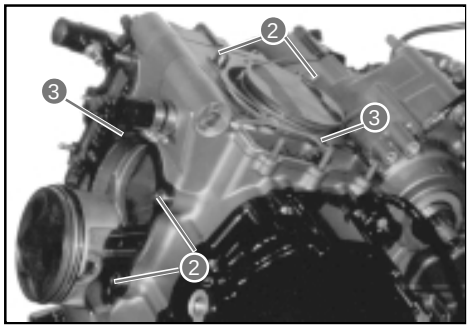

- Apply engine oil to the sliding surfaces of the pistons and cylinders.

The cylinders are identified by the stamped letters "F" and "R":
"F": Front (no. 1) cylinder
"R": Rear (no. 2) cylinder

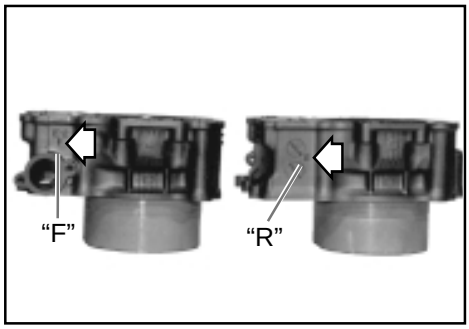

Downloaded from www.Manualslib.com manuals search engine

- Hold the piston rings in position and insert the pistons into the front and rear cylinders.

When installing the cylinders, keep the timing chains taut. Make sure the timing chains are not caught between the driving sprocket and the crankcase when the crankcase is turned.

- Temporarily tighten cylinder (M6) nuts **1**.

*Apply clamp **A** with the front cylinder nut as shown in the figure.*

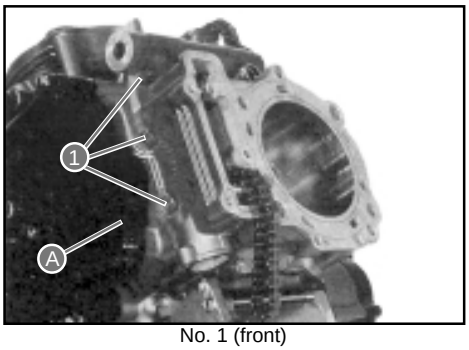

No. 1 (front)

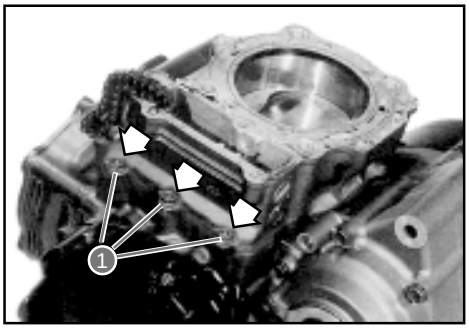

No. 2 (rear)

- Pull the timing chains out of the cylinders and fit chain guides **2**.

*There are slideways cast in the crankcase for the lower ends of each timing chain guide **2**. Take care to properly insert timing chain guides **2** into the slideways.*

- Fit dowel pins **3** and the new cylinder head gaskets **4** on the front and rear cylinders.

To prevent oil leakage, use new gaskets.

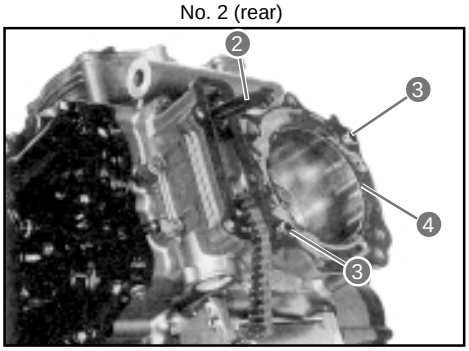

No. 1 (front)

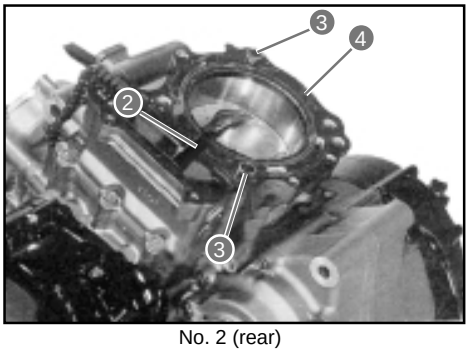

No. 2 (rear)

Downloaded from www.Manualslib.com manuals search engine

- Place the rear cylinder head on the cylinder.

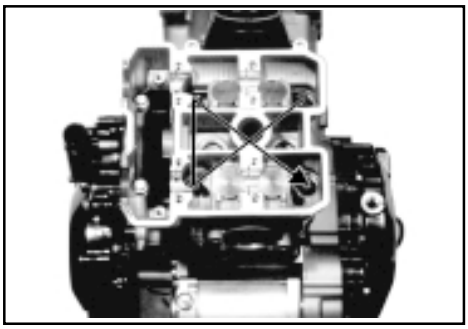

When installing the cylinder head, keep the timing chain taut.

- Using a torque spanner, tighten the cylinder head bolts (M10) to the specified torque in two steps and following a sequential cross-wise pattern.

Tightening torque:

Cylinder head bolt (M10) **Iniziale 25 N·m (2,5 kg-m) (18.25 lb·ft)**
Finale 42 N·m (4,2 kg-m) (30.66 lb·ft)

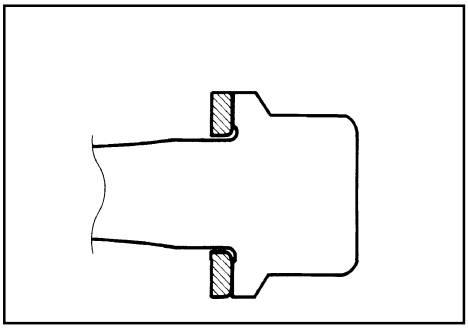

** Fit the washers on the cylinder head bolts (M10) as shown in the figure.*
** Apply engine oil to the washers before fitting the cylinder head bolts.*

- After screwing the cylinder head bolts (M10) tight, fit cylinder head nuts (M8) **1**, (M6) **2**, and bolts (M6) **3**.
- Tighten cylinder head nuts **1** and **2** and bolts **3**, and cylinder nuts **4**.

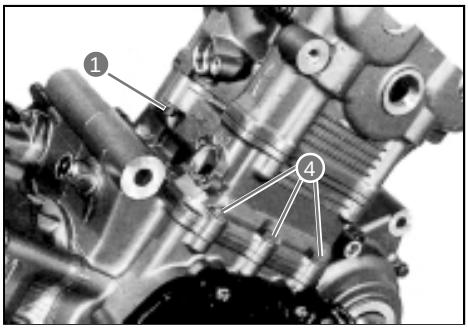

Tightening torques:

Cylinder head nut (M8) 1	**25 N·m (2,5 kg-m) (18.25 lb·ft)**
Cylinder head nut (M6) 2	**10 N·m (1,0 kg-m) (7.3 lb·ft)**
Cylinder head bolt (M6) 3	**10 N·m (1,0 kg-m) (7.3 lb·ft)**
Cylinder nut (M6) 4	**10 N·m (1,0 kg-m) (7.3 lb·ft)**

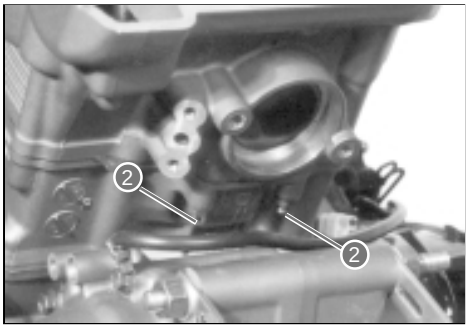

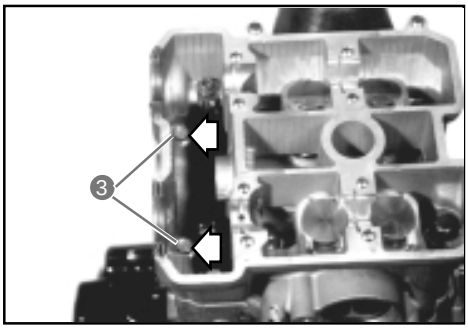

Downloaded from www.Manualslib.com manuals search engine

- Place the front cylinder head on the cylinder.

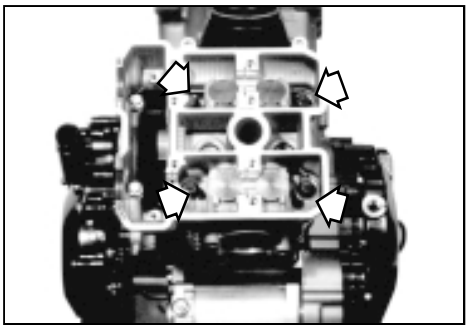

When installing the cylinder head, keep the timing chain taut.

- Using a torque spanner, tighten the cylinder head bolts (M10) to the specified torque in two steps and following a sequential crosswise pattern.

Tightening torque:
Cylinder head bolt (M10) (initial) 25 N·m (2,5 kg-m) (18.25 lb·ft)
(final) 42 N·m (4,2 kg-m) (30.66 lb·ft)

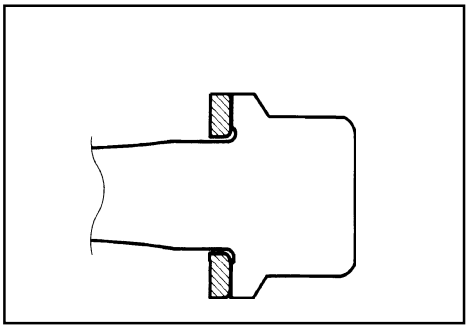

** Fit the washers on the cylinder head bolts (M10) as shown in the figure.*
** Apply engine oil to the washers before fitting the cylinder head bolts.*

- After screwing the cylinder head bolts (M10) tight, fit cylinder head nuts (M8) **1**, (M6) **2**, bolts (M6) **3**, and oil cooler mounting bracket **4**.
- Tighten cylinder head nuts **1** and **2** and bolts **3**, and cylinder nuts **5**.

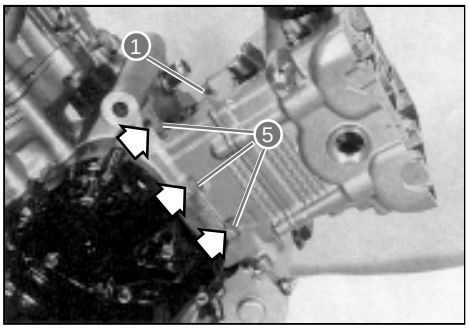

Tightening torques:

Cylinder head nut (M8) 1	**25 N·m (2,5 kg-m) (18.25 lb·ft)**
Cylinder head nut (M6) 2	**10 N·m (1,0 kg-m) (7.3 lb·ft)**
Cylinder head bolt (M6) 3	**10 N·m (1,0 kg-m) (7.3 lb·ft)**
Cylinder nut (M6) 5	**10 N·m (1,0 kg-m) (7.3 lb·ft)**

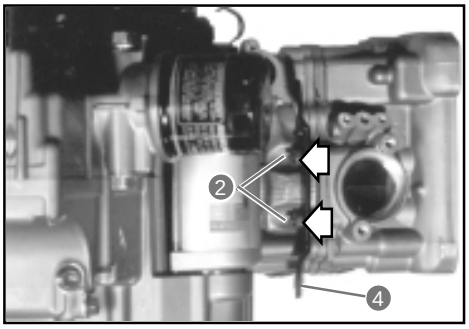

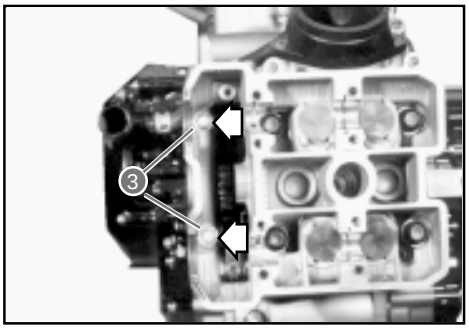

Downloaded from www.Manualslib.com manuals search engine

- Pull up the timing chains and fit the timing chain stretchers in each cylinder head.
  1 No. 1 (front) cylinder head
  2 No. 2 (rear) cylinder head

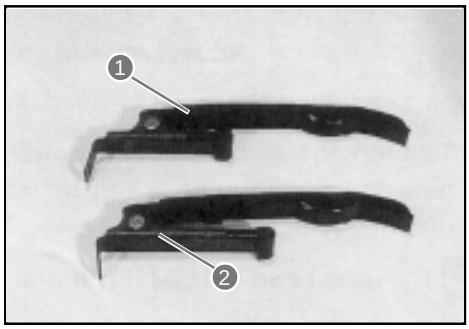

** When fitting a timing chain stretcher, insert the end of its support **A** into the guide cast in the cylinder.*
** When fitting the no. 1 (front) timing chain stretcher, pass it behind rib **B**.*

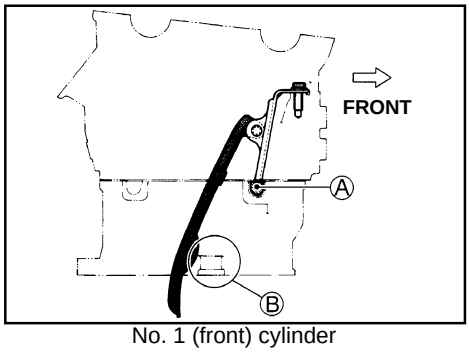

No. 1 (front) cylinder

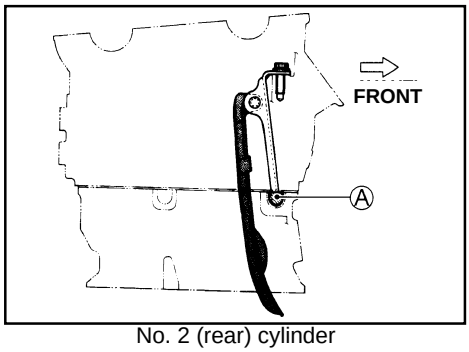

No. 2 (rear) cylinder

- Tighten the timing chain stretcher fastening bolts with the specified torque.

Tightening torque:
Timing chain stretcher fastening bolt 10 Nm (1,0 kg-m) (7.3 lb·ft)

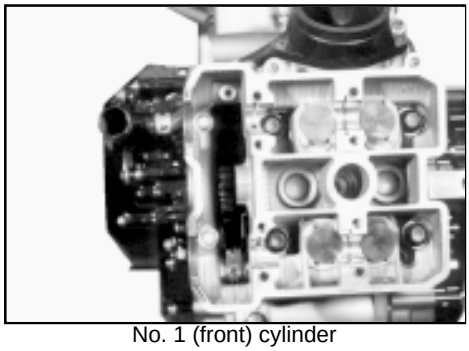
No. 1 (front) cylinder

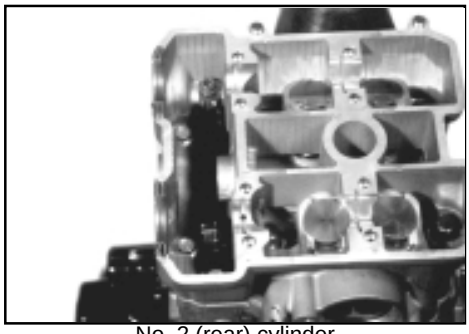
No. 2 (rear) cylinder

Downloaded from www.Manualslib.com manuals search engine

FRONT NO. 2 VALVE MOTION IDLER GEAR/SPROCKET

- Turn the crankshaft anticlockwise with a tubular spanner and align "F|T" line **A** on the generator rotor with valve gear timing inspection hole mark **B** while pulling up the timing chain.

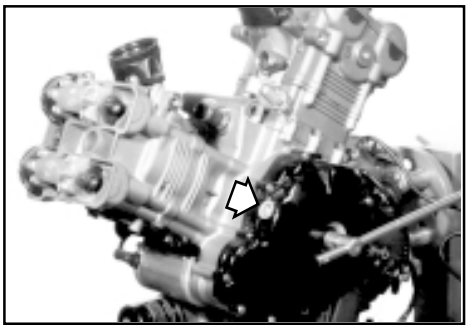

Pull up the timing chain, or it may get caught between the crankcase and the valve gear driving sprocket.

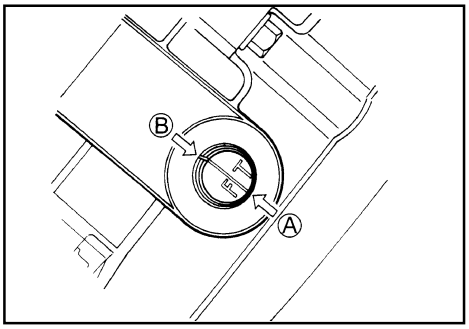

To correctly time the crankshaft, be sure to align "F|T" line A with mark B and to maintain the alignment when installing the front and rear no. 2 valve motion idler gears/sprockets.

- Apply molybdenum bisulphide grease to the no. 2 valve motion idler gear/sprocket, to its shaft **1** and to thrust washer **2**.

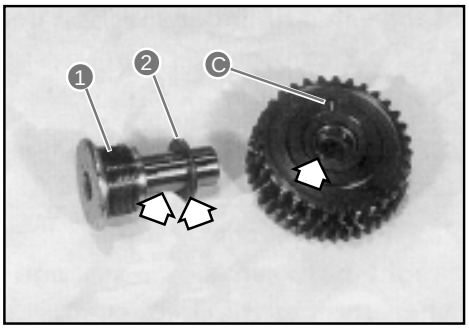

Specific product: MOLIKOTE

** Thrust washer **2** must be selected for each cylinder head. Refer to page D-84 for information on thrust washer specifications.*
** To facilitate proper installation, use paint to mark line **C** on the no. 2 valve motion idler gear/sprocket.*

- Fit the no. 2 valve motion idler gear/sprocket on the front cylinder head and engage it with the timing chain.
- Align line **C** on the no. 2 valve motion idler gear/sprocket with line **D** on the cylinder head.

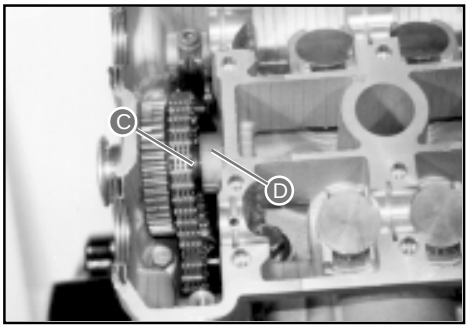

- Temporarily fit no. 2 valve motion idler gear/sprocket **1** with copper washer **3** and thrust washer **2**.

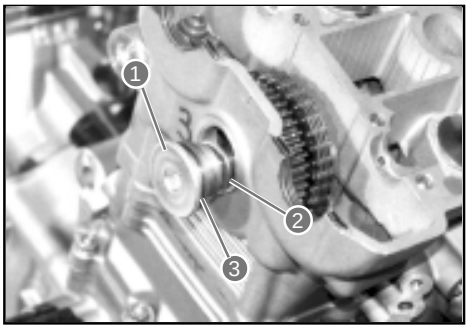

Downloaded from www.Manualslib.com manuals search engine

- Check and correct the positions of the “F|T” line on the generator rotor and on no. 2 valve motion idler gear/sprocket **1**.

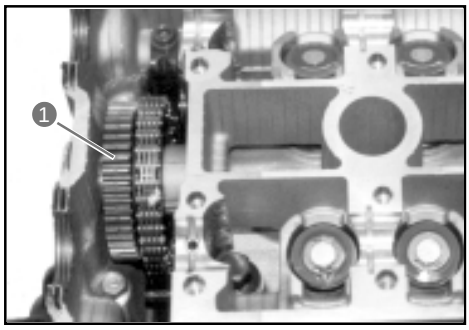

When checking the above positions, take up the timing chain slack on the side of chain guide 2 by holding the no. 2 valve motion idler gear/sprocket with one hand.

Given the valve gear ratio, in some cases (a 0.5 percent probability) line A and the root of the gear tooth of the no. 2 valve motion idler gear/sprocket do not align with line B on the cylinder head (refer to pages D-83 -87).

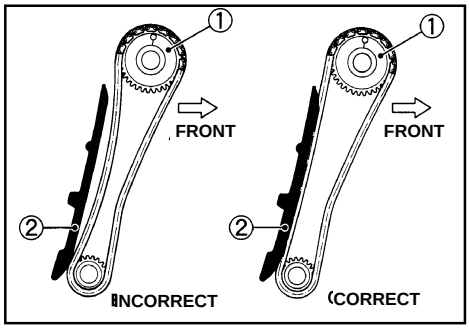

If line A does not align with line B, rotate the generator rotor 360 degrees (one full turn) to bring the “F|T” line on the generator rotor at the valve gear timing inspection hole mark and correctly reinstall the no. 2 valve motion idler gear/ sprocket (see figure).

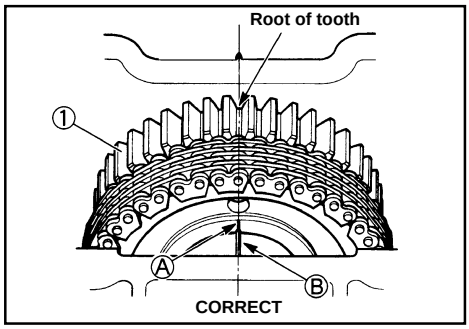

Pull up the timing chains, or they may get caught between the crankcase and the valve gear driving sprocket when the crankshaft is turned.

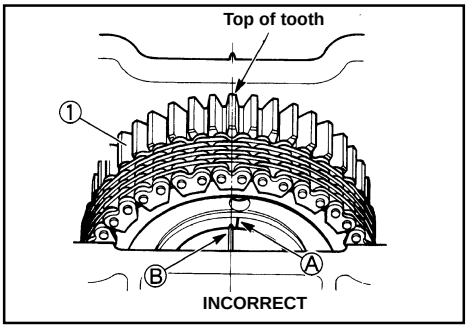

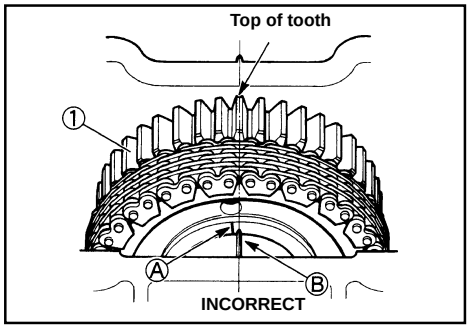

When checking the position of no. 2 valve motion idler gear/sprocket 1 on the tooth, on the top or the root, keep the eye at the level shown in the figure.

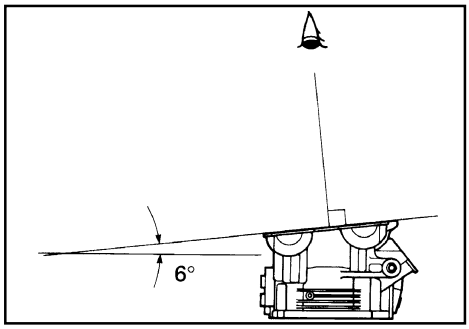

Downloaded from www.Manualslib.com manuals search engine

- Tighten the shaft of the no. 2 valve motion idler gear/sprocket with the specified torque.

Tightening torque:
No. 2 valve motion idler gear/sprocket shaft 40 Nm (4,0 kg-m) (29.2 lb·ft)

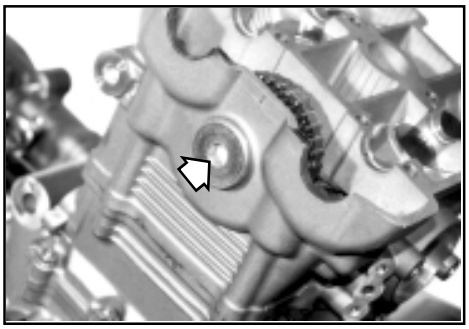

NO. 1 (FRONT) TIMING CHAIN TENSION ADJUSTER

- Fit the front timing chain tension adjuster by following the procedure described below.

The timing chain tension adjusters differ in shape.
1 *For no. 1 (front) cylinder*
2 *For no. 2 (rear) cylinder*

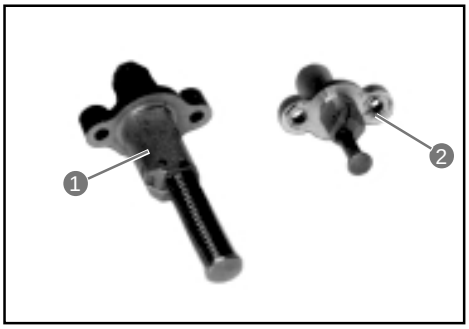

- Fully screw in timing chain tension adjuster bolt **3**.

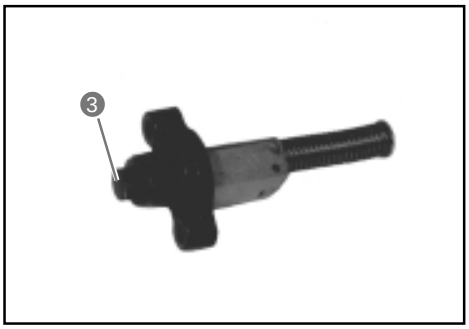

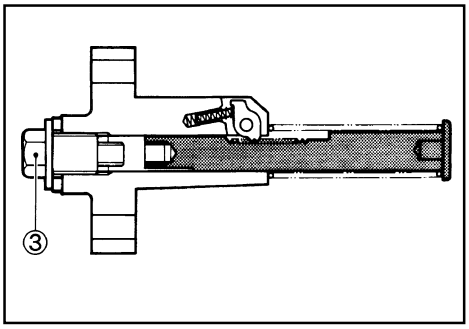

Downloaded from www.Manualslib.com manuals search engine

- Fully compress timing chain tension adjuster rod **1** after releasing ratchet **2**.

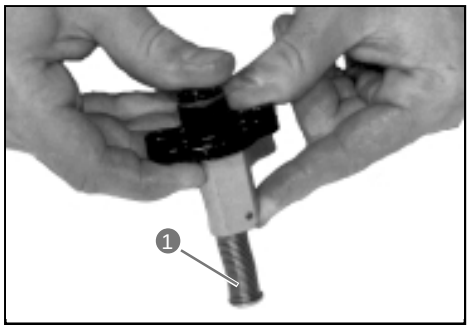

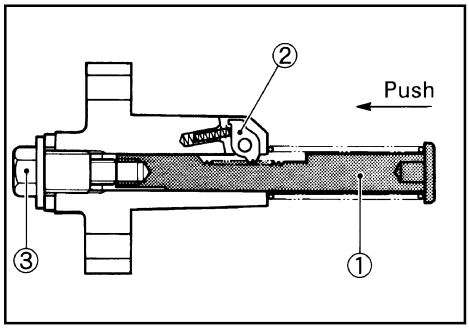

- From this position, unscrew adjuster bolt **1** until adjuster rod **2** locks. The timing chain tension adjuster is now ready for installation.

*Unscrew adjuster bolt **3** while compressing the adjuster rod.*

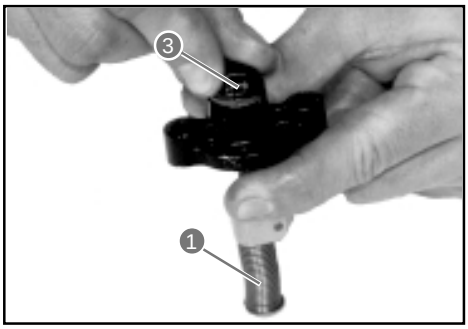



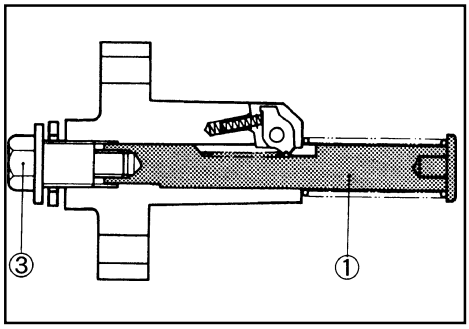

- Fit a new gasket **4**.

To prevent oil leakage, use a new gasket.

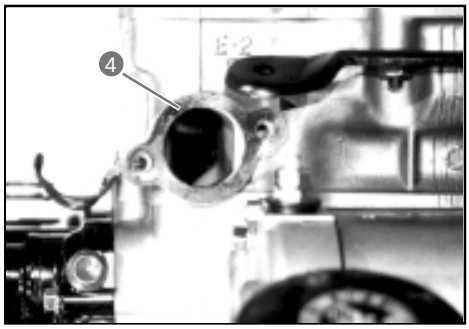

Downloaded from www.Manualslib.com manuals search engine

- Install the timing chain tension adjuster as shown in the figure and tighten the fastening bolts with the specified torque.

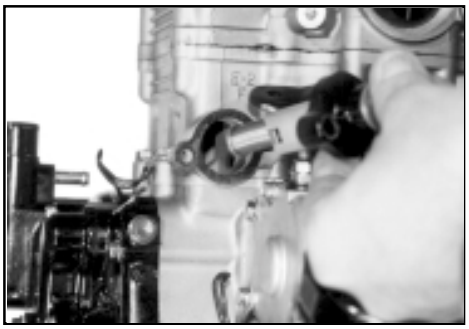

Tightening torque:

Timing chain tension adjuster fastening bolt	**10 N·m (1,0 kg-m) (7.3 lb·ft)**

- Release the adjuster by screwing in bolt **1**.

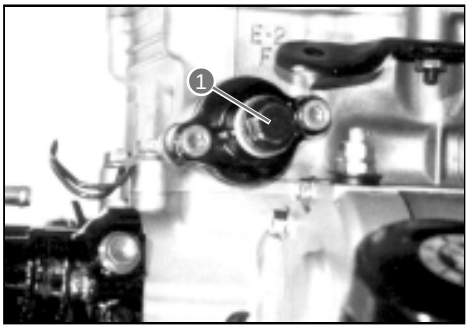

A click may be heard when the timing chain tension adjuster rod is released.

- Tighten adjuster bolt **1** with the specified torque.

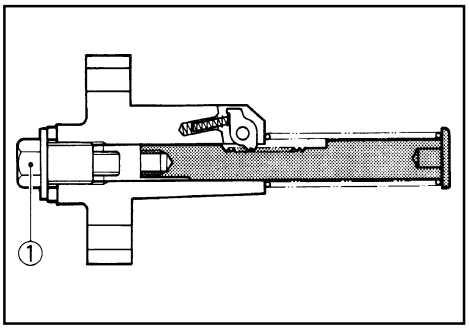

Tightening torque:

Timing chain tension adjuster bolt (front)	**23 N·m (2,3 kg-m) (16.79 lb·ft)**

After installing the timing chain tension adjuster, ensure that it works properly by checking the timing chain slack.

REAR NO. 2 VALVE MOTION IDLER GEAR/SPROCKET

- To install the rear no. 2 valve motion idler gear/sprocket, the crankshaft must be in the position (top dead centre of the compression stroke) used for the installation of the front idler gear/sprocket.
- The other procedures are the same as those used for the installation of the front no. 2 valve motion idler gear/sprocket.

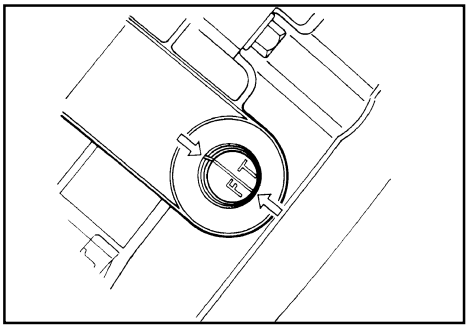

When checking the position of the no. 2 valve motion idler gear/sprocket, take up the timing chain slack on the side of chain guide 2 by holding the no. 2 valve motion idler gear/sprocket with one hand.

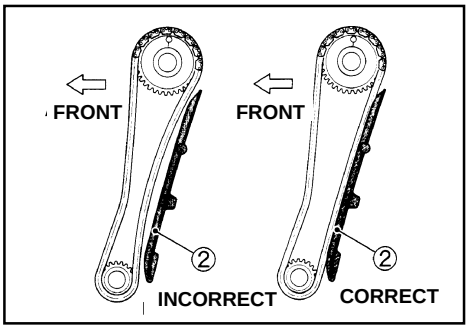

Downloaded from www.Manualslib.com manuals search engine

NO. 2 (REAR) TIMING CHAIN TENSION ADJUSTER

- Fit the rear timing chain tension adjuster by following these steps:
- Remove the no. 2 (rear) timing chain tension adjuster.

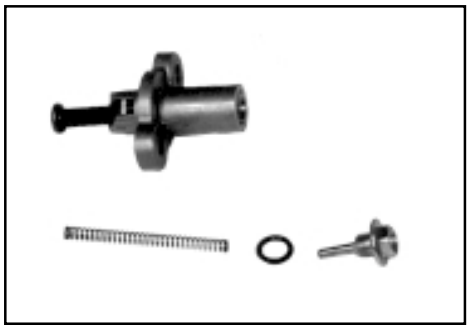

- Fit a new gasket **1**.

To prevent oil leakage, use a new gasket.

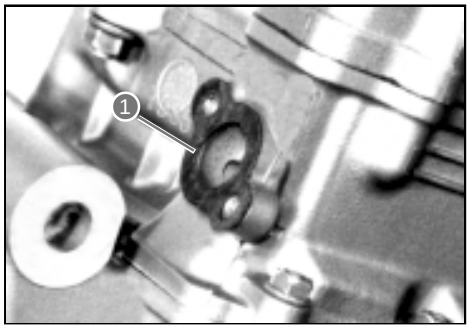

- Fully compress the timing chain tension adjuster rod after releasing the ratchet.

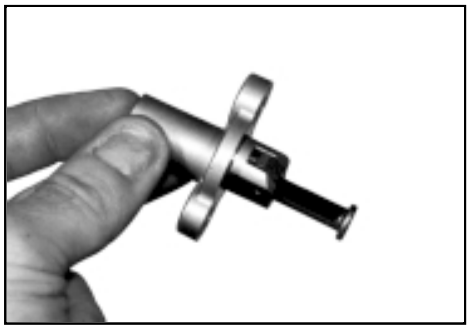

- Install the timing chain tension adjuster as shown in the figure and tighten the fastening bolts with the specified torque.

Tightening torque:
Timing chain tension adjuster fastening bolt 10 N·m (1,0 kg-m) (7.3 lb·ft)

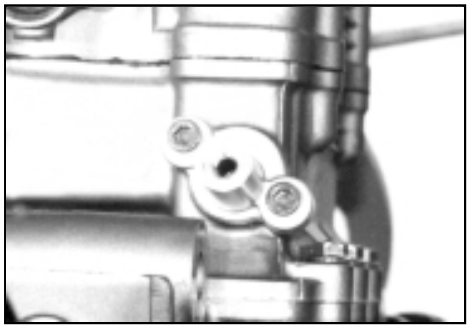

- Fit O-ring **2**, spring **3** and (front) adjuster bolt **4**, and then tighten with the specified torque.

*Grease O-ring **2** before installation.*

Specific product: AGIP GREASE 30

Tightening torque:
Timing chain tension adjuster bolt (rear) 4 7 N·m (0,7 kg-m) (5.11 lb·ft)

A click may be heard when the timing chain tension adjuster bolt is fitted.

After installing the timing chain tension adjuster, ensure that it works properly by checking the timing chain slack.

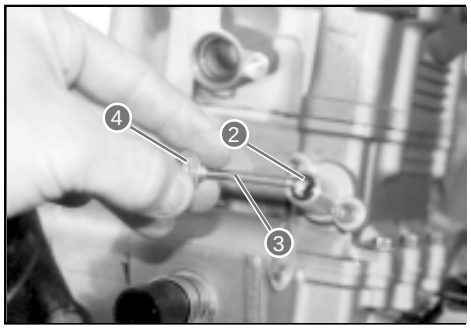

Downloaded from www.Manualslib.com manuals search engine

- Rotate the generator rotor 720 degrees (two full turns) and align the “F|T” line on the generator rotor with the mark of the valve gear timing inspection hole.
- Check the positions of lines A on the front and rear no. 2 valve motion idler gears/sprockets.

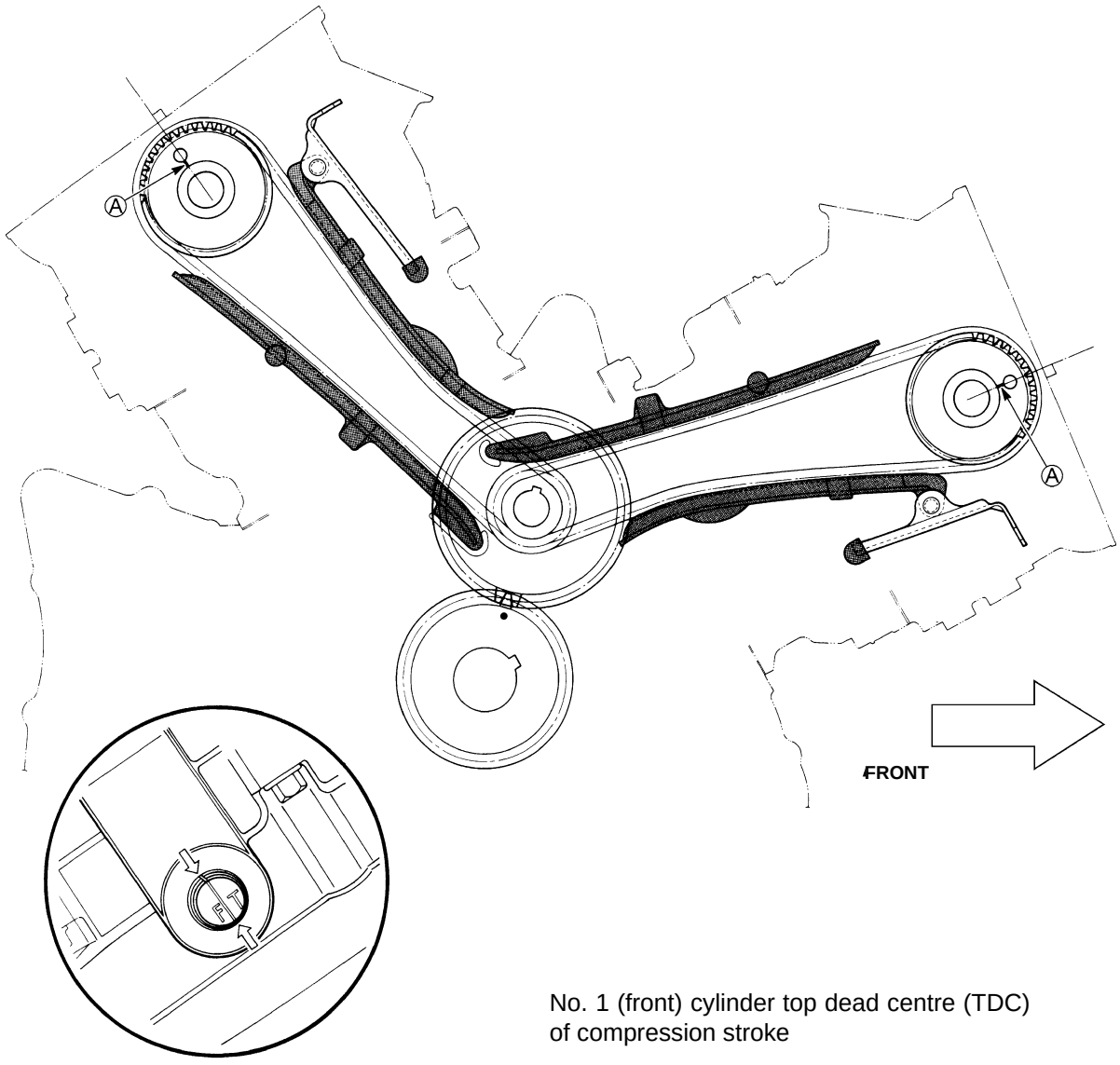

No. 1 (front) cylinder top dead centre (TDC) of compression stroke

NO. 1 (FRONT) CAMSHAFTS

- In the above conditions, install the no. 1 (front) intake and exhaust camshafts by following these steps:

Downloaded from www.Manualslib.com manuals search engine

The camshafts are identified by letters and differ in shape.
1 *For the no. 1 (front) exhaust camshaft*
2 *For the no. 1 (front) intake camshaft*
3 *For the no. 2 (rear) intake camshaft*
4 *For the no. 2 (rear) exhaust camshaft*

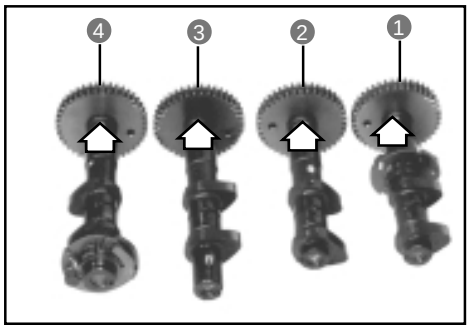

Immediately before placing the camshafts in the cylinder head, apply specific product to their journals.
Apply engine oil to the camshaft journal bearings.

Specific product: MOLIKOTE

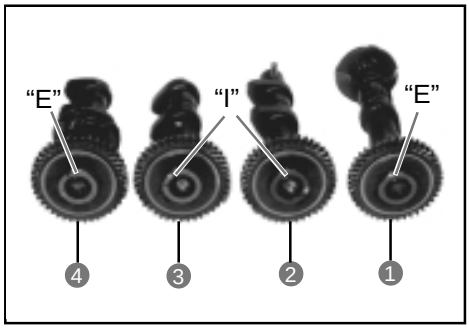

- Position the no. 1 (front) intake and exhaust camshafts.
- Align lines **A** on the camshafts so that they are parallel with the mating surface of the cylinder head cover. Position the cam faces as shown in the figure.

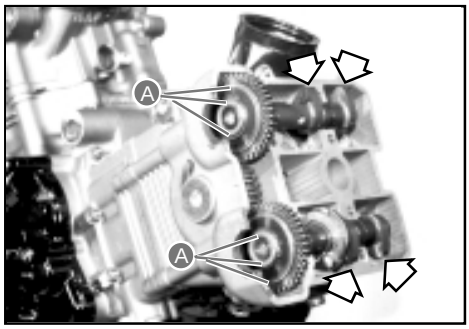

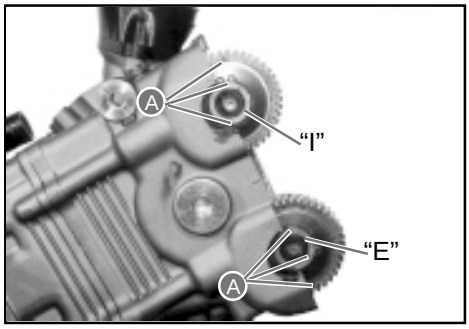

- Insert C-rings **5** into the groove of each camshaft.
- Fit dowel pins **6**.

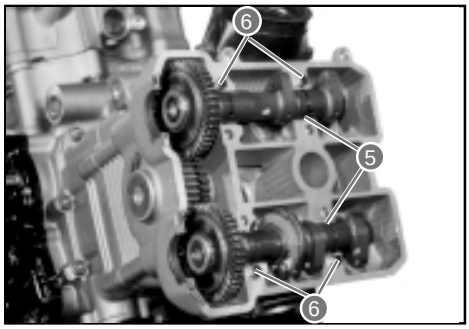

Downloaded from www.Manualslib.com manuals search engine

- Install the intake and exhaust camshaft journal bearings.
- Fix the camshaft bearings evenly by tightening the bolts according to a sequential crosswise pattern. (Equalize the pressure by shifting the spanner diagonally so as to fasten the shafts evenly.)

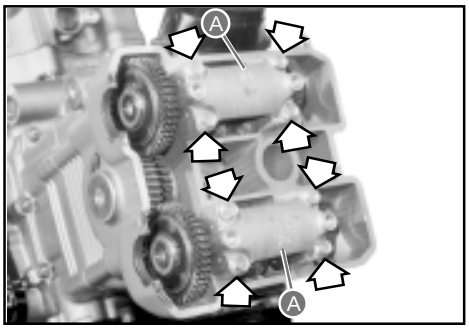

** Failure to tighten the camshaft journal bearings evenly may result in damage to the cylinder head or the camshafts.*
** Each camshaft is identified by a die-cast letter **A**.*

- Tighten the camshaft bearing bolts with the prescribed torque.

Tightening torque:
Camshaft bearing bolt **10 N·m (1,0 kg-m) (7.3 lb·ft)**

The camshaft bearing bolts are made of a special material having a much higher strength than other high-strength bolts. Never use bolts other than those specified. These bolts are identified by a "9" stamped on their heads.

- Check the position of the no. 1 (front) intake and exhaust camshafts.

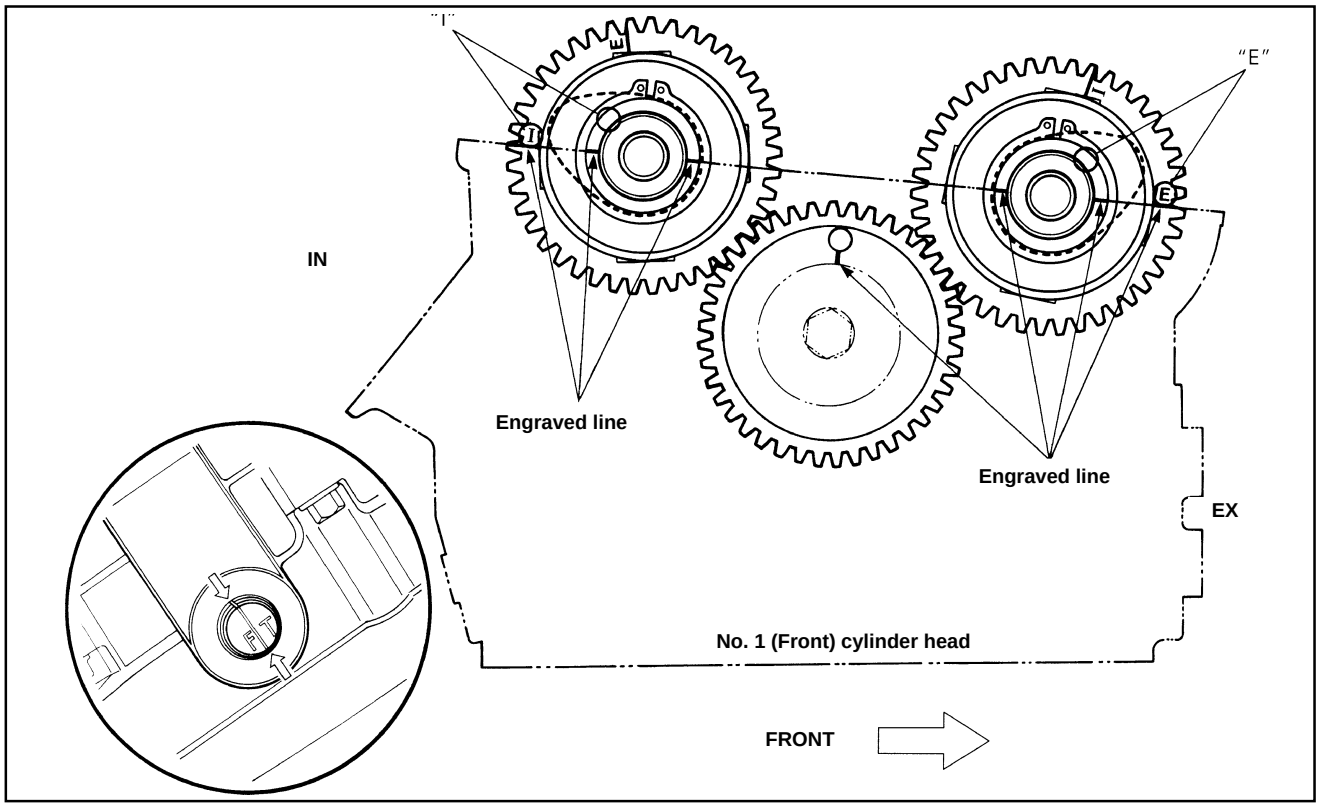

Downloaded from www.Manualslib.com manuals search engine

NO. 2 (REAR) CAMSHAFTS

- Install the no. 2 (rear) intake and exhaust camshafts by following these steps:
- From the installing position of the no. 1 (front) camshafts, rotate the crankshaft 360 degrees (1 full turn) and align the “F|T” line on the generator rotor with the mark of the tappet inspection hole.

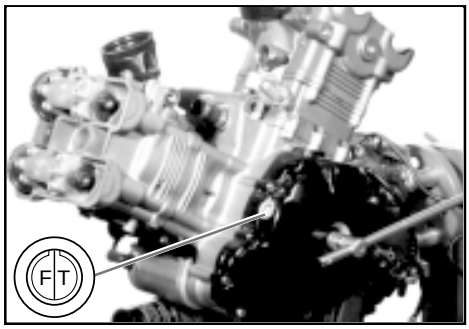

*In this position, engraved line **A** of the no. 2 valve motion idler gear/ sprocket is not visible.*

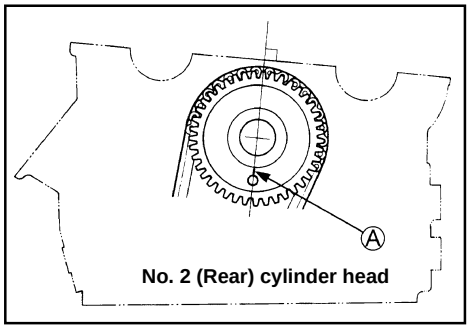

- Position the no. 2 (rear) intake **1** and exhaust **2** camshafts.
- Align lines **B** on the camshafts so that so that they are parallel with the mating surface of the cylinder head cover. Position the cam faces as shown in the figure.

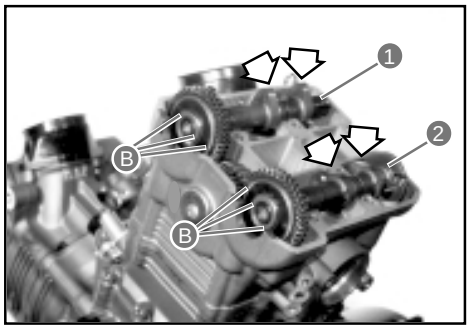

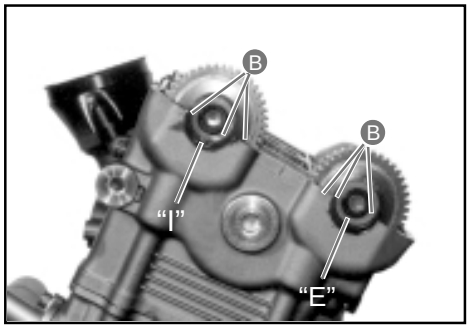

- Insert C-rings **3** into the groove of each camshaft.
- Fit dowel pins **4**.

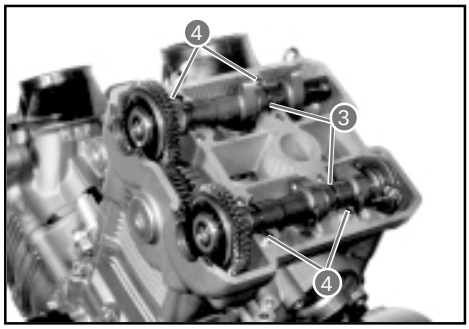

Downloaded from www.Manualslib.com manuals search engine

- Install the intake and exhaust camshaft journal bearings.
- Fix the camshaft bearings evenly by tightening the bolts according to a sequential crosswise pattern. (Equalize the pressure by shifting the spanner diagonally so as to fasten the shafts evenly.)

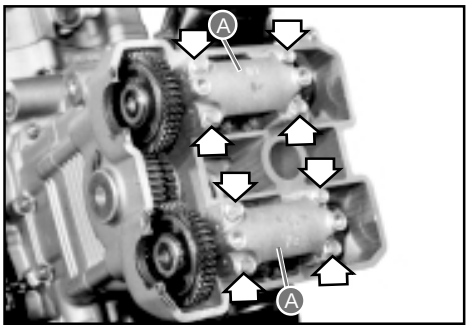

** Failure to tighten the camshaft journal bearings evenly may result in damage to the cylinder head or the camshafts.*
** Each camshaft is identified by a die-cast letter **A**.*

- Tighten the camshaft bearing bolts with the prescribed torque.

Tightening torque:
Camshaft bearing bolt **10 N·m (1,0 kg-m) (7.3 lb·ft)**

The camshaft bearing bolts are made of a special material having a much higher strength than other high-strength bolts. Never use bolts other than those specified. These bolts are identified by a "9" stamped on their heads.

- Check the position of the no. 2 (rear) intake and exhaust camshafts.

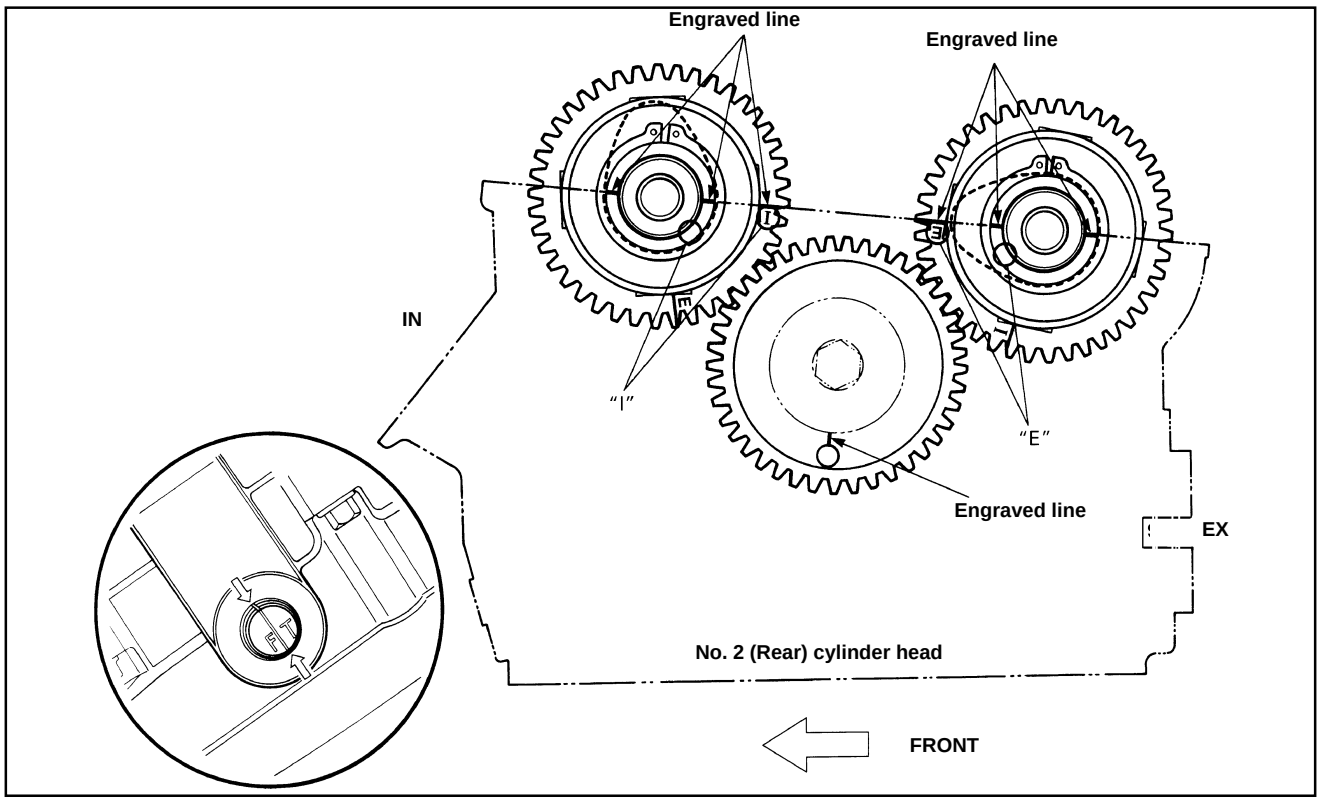

Downloaded from www.Manualslib.com manuals search engine

- After installing the no. 2 (rear) camshafts, rotate the crankshaft 360 degrees (1 full turn) and check their positions again.

Be sure to check the position of "F|T" line A on the generator rotor, of line B on no. 2 valve motion idler gears/sprockets C, and of the line on the camshafts.

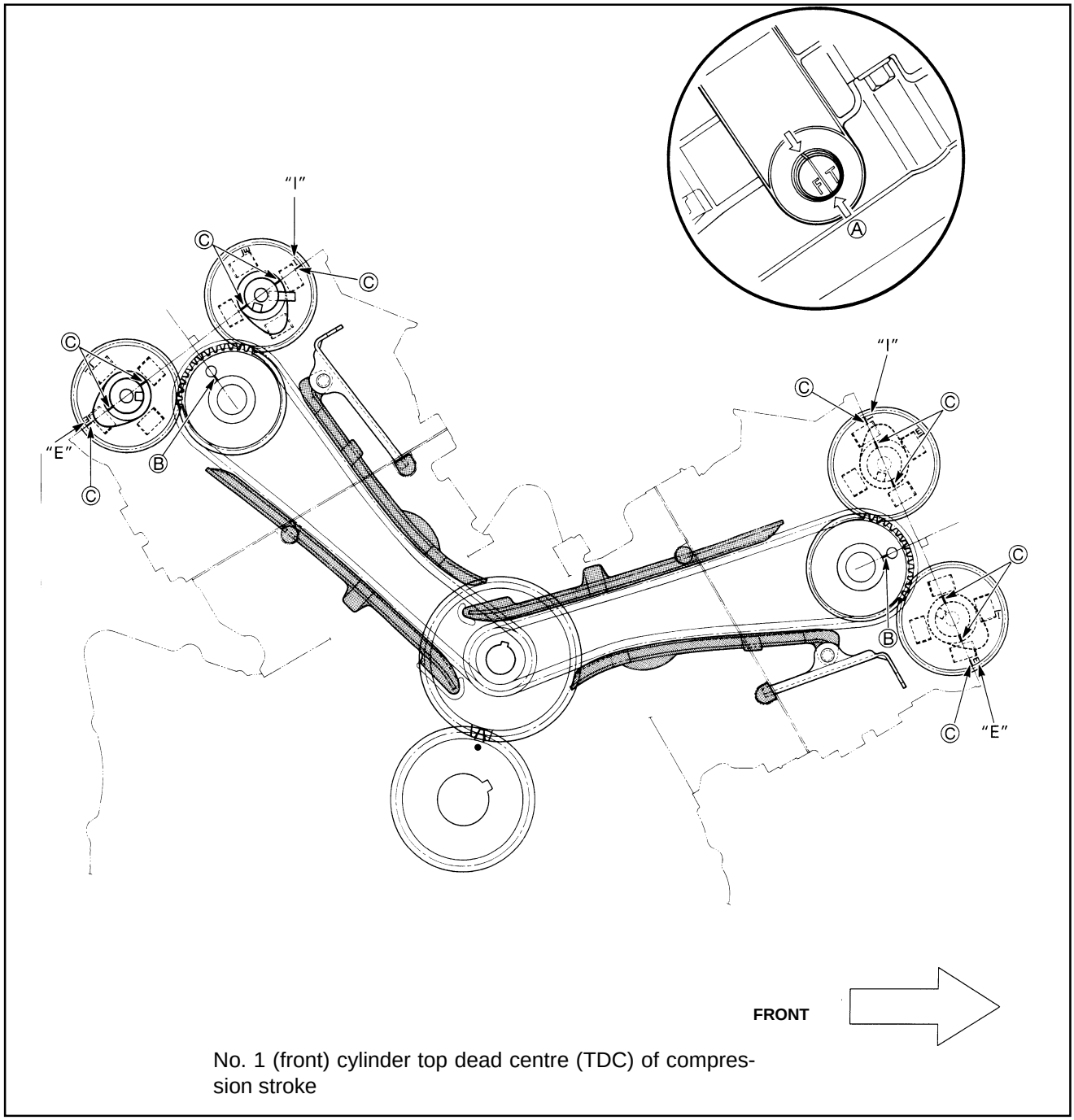

No. 1 (front) cylinder top dead centre (TDC) of compression stroke

Downloaded from www.Manualslib.com manuals search engine

- Pour engine oil into each of the front and rear cylinder head pockets.

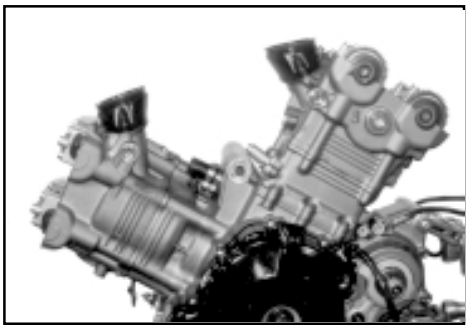

Be sure to check the tappet clearance (refer to pages B-7 to B-11.)

- Install camshaft position sensor **1** and tighten the fastening bolts with the specified torque.

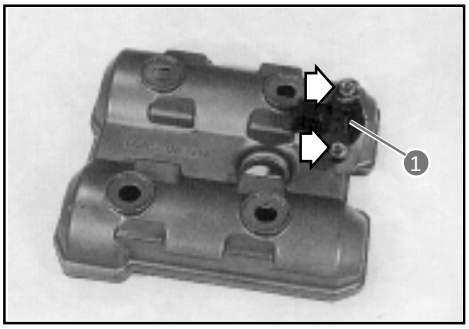

Tightening torque:

Camshaft position sensor fastening bolt	**8 N·m (0,8 kg-m) (5.84 lb·ft)**

To prevent oil leakage, fit a new gasket.

- Fit new gaskets **2** and **3** on each cylinder head cover.
- Apply specific product to the gasket end caps as shown in the figure.

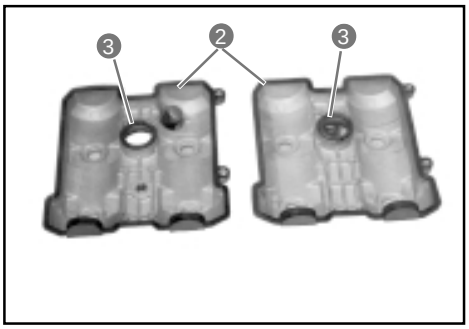

Specific product: RHODORSEAL 5552

To prevent oil leakage, use new gaskets.

- Fit dowel pins **4** on the front and rear cylinder heads.

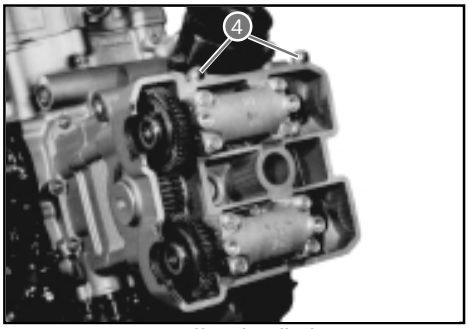

No. 1 (front) cylinder

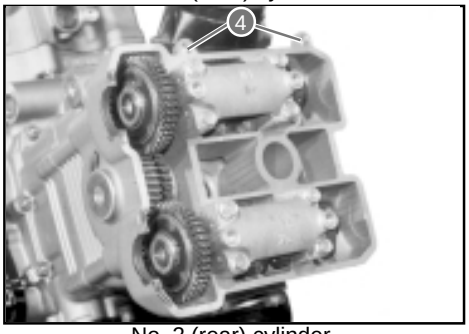

No. 2 (rear) cylinder

Downloaded from www.Manualslib.com manuals search engine

- Place the cylinder head covers on the cylinder heads.
- Fit a gasket to each cylinder head cover bolt.

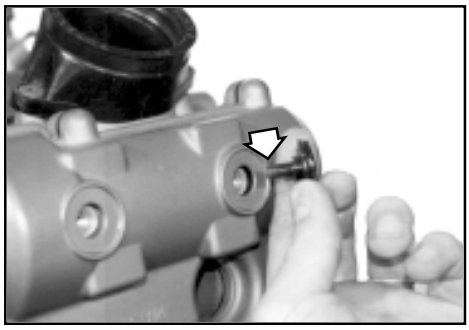

To prevent oil leakage, use new gaskets.

- After applying engine oil to the gaskets, tighten the cylinder head cover bolts with the specified torque.

Tightening torque:

Cylinder head cover bolt	**14 N·m (1,4 kg-m) (10.22 lb·ft)**

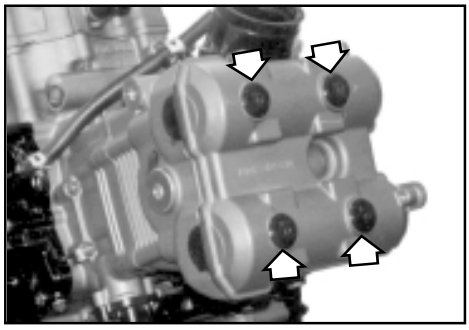

- Tighten tappet inspection hole plug **2** and generator cover plug **3** with the specified torques.

Tightening torques:

Tappet inspection hole plug	**23 N·m (2,3 kg-m) (16.79 lb·ft)**
Generator cover plug	**15 N·m (1,5 kg-m) (10.95 lb·ft)**

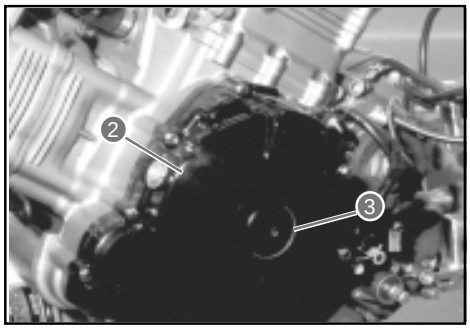

- Fit new O-rings to the cooling system joint and grease them.

Specific product: AGIP GREASE 30

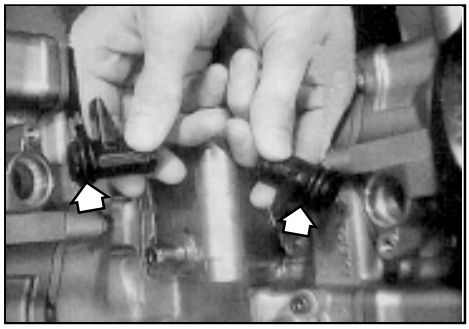

Downloaded from www.Manualslib.com manuals search engine

- Firmly tighten the cooling system union bolts.

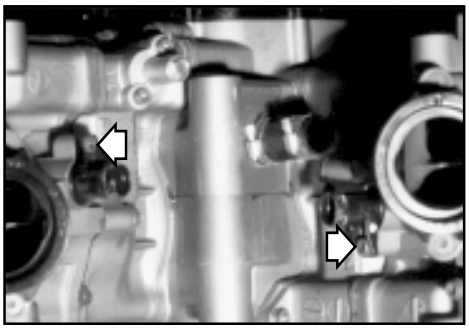

- Install the thermostat casing with the coolant lines and firmly tighten the fastening screws.

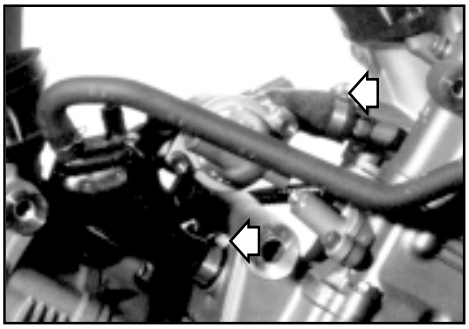

Turn the heads of the fastening screws to the left.

- Fit crankcase breather pipe **1**.

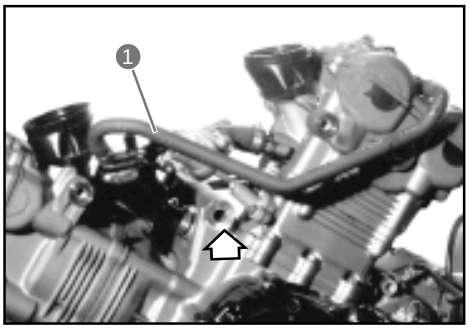

- Fit the spark plugs on each cylinder head and tighten them with the specified torque.

Tightening torque:
Spark plug **11 N·m (1,1 kg-m) (8.03 lb·ft)**

Before using an ignition spanner, screw in the spark plugs manually to avoid damaging the aluminium threads.

Downloaded from www.Manualslib.com manuals search engine

CAMSHAFT/CYLINDER HEAD

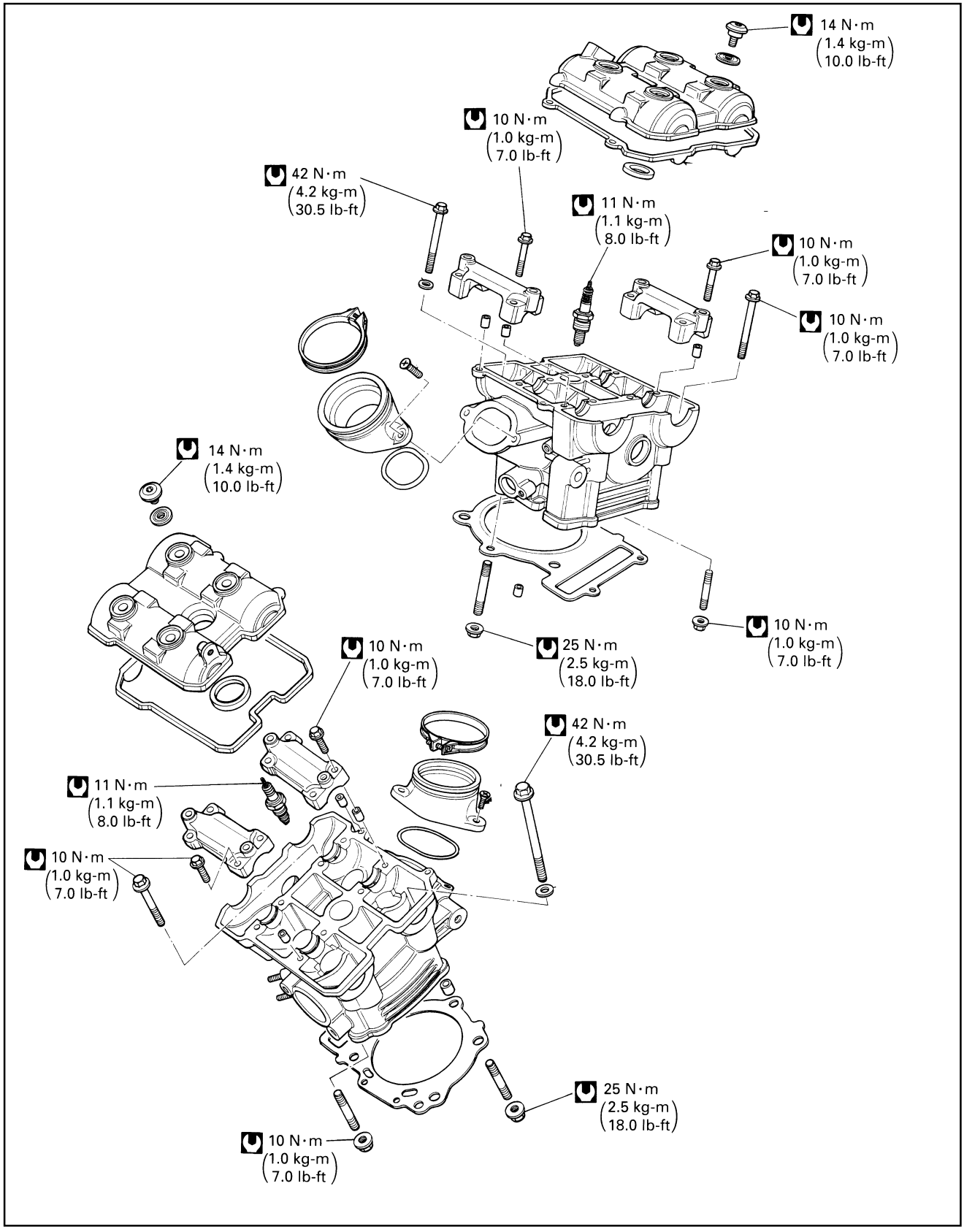

Downloaded from www.Manualslib.com manuals search engine

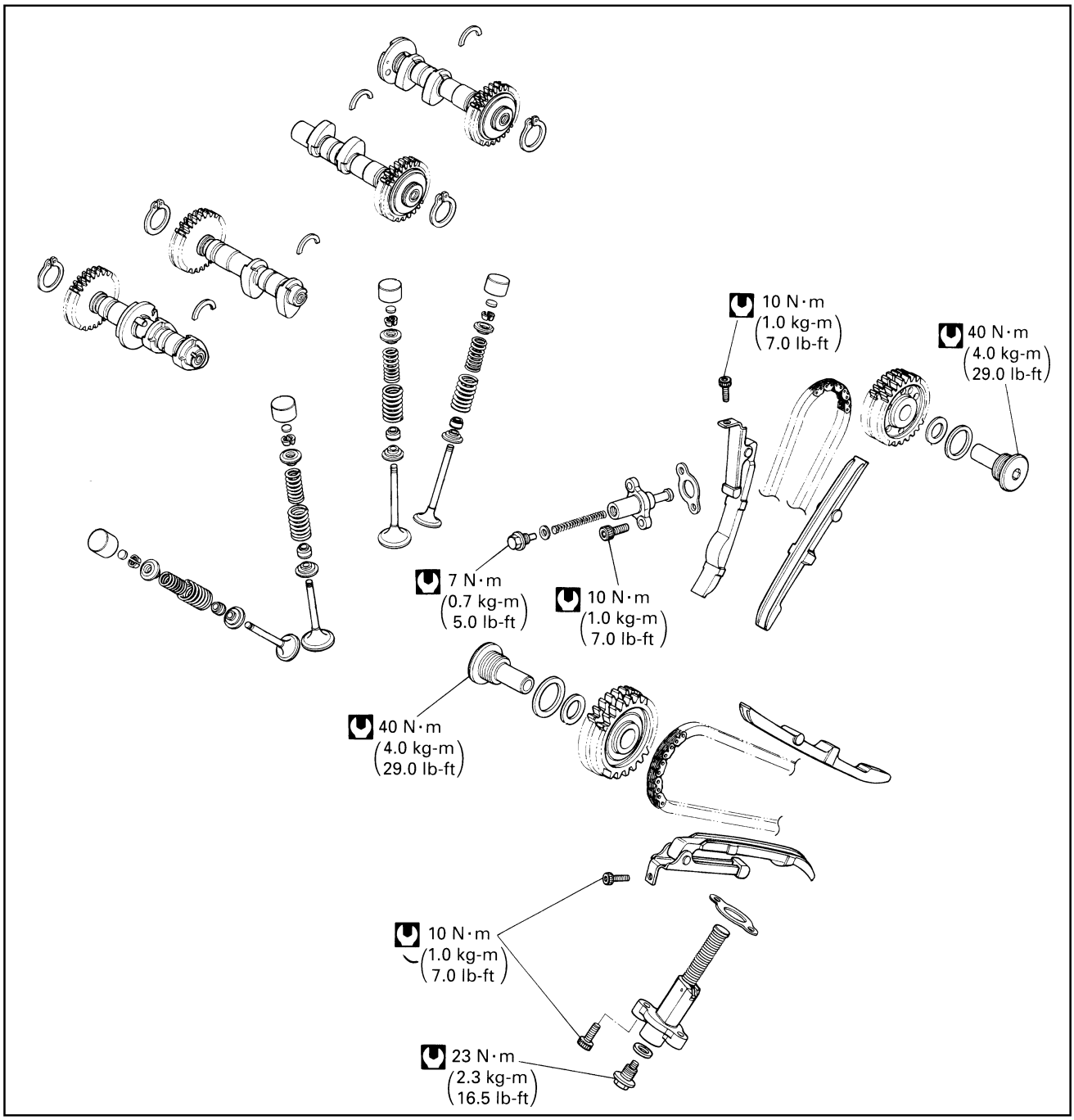

CONTENTS

DESCRIPTION OF THE VALVE GEAR SYSTEM D-83
REMOVING THE CAMSHAFTS D-88
CHECKING AND SERVICING THE CAMSHAFTS AND THE CYLINDER HEAD D-90
INSTALLING THE CAMSHAFTS D-102

Downloaded from www.Manualslib.com manuals search engine

DESCRIPTION OF THE VALVE GEAR SYSTEM

The Navigator 1000 valve gear system consists of the crankshaft, the primary driving gear, the no. 1 valve motion idler gear/sprocket, the no. 1 valve motion idler gear/sprocket shaft, the timing chains, the no. 2 valve motion idler gears/sprockets and the camshafts.
This system allows the camshaft driving gear to be much smaller in diameter than a conventional timing sprocket. The smaller size of the camshaft driving gears allows the overall cylinder height to be reduced. The primary driving gear and the camshaft driving gears are of the scissors type. This allows the elimination of backlash and the reduction of mechanical noise.

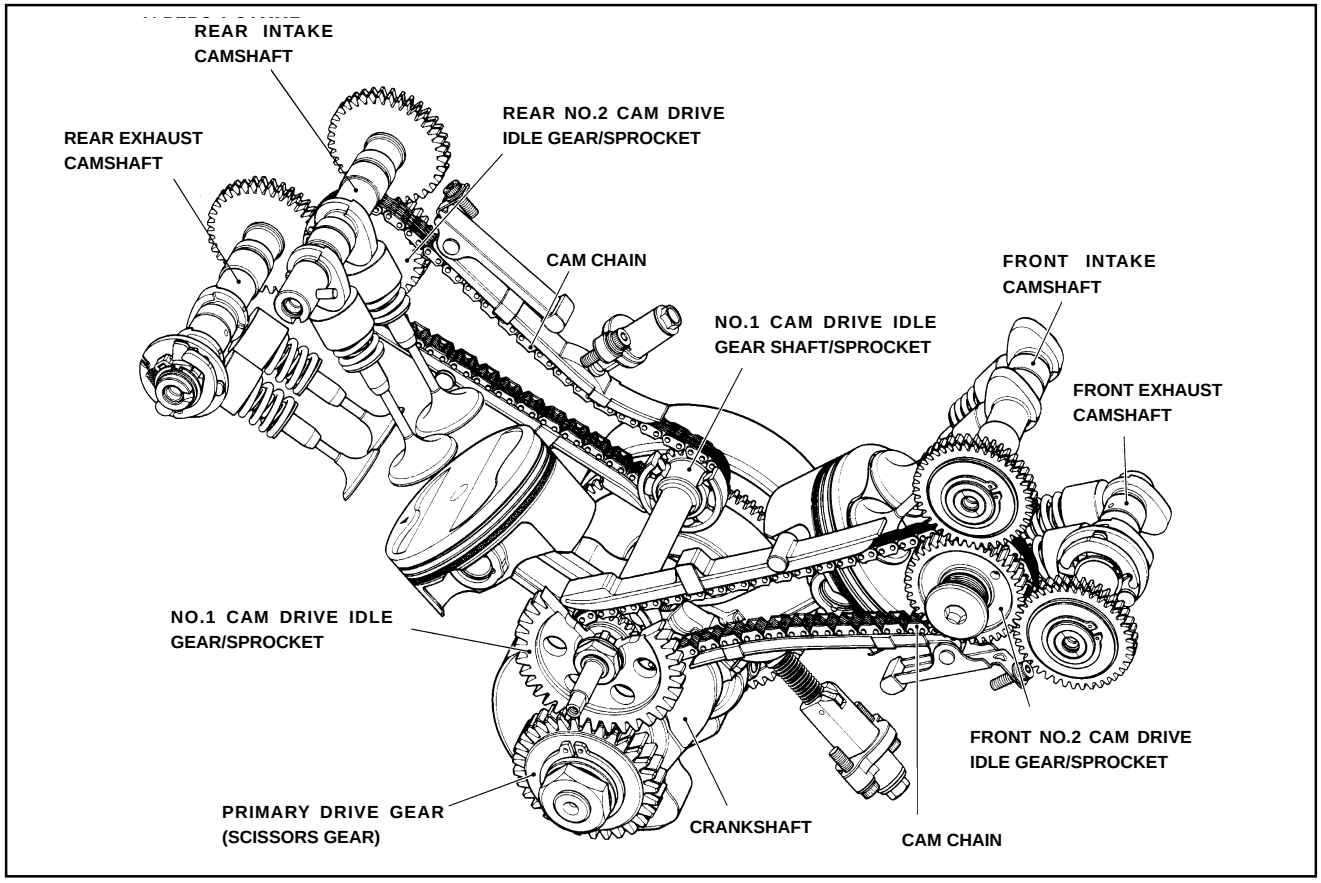

In this system, the angular position of the sprocket teeth on the no. 1 valve motion idler gear/sprocket relative to the primary driving gear varies between the compression and exhaust top dead centres.
The figure below shows the positions of the primary driving gear and of the no. 1 valve motion idler gear/sprocket when the piston in the front cylinder is at each of the two top dead centres. The difference between the compression and the exhaust top dead centres as seen on the gear, is in the position of the no. 1 valve motion sprocket.
While the meshing teeth of the no. 1 valve motion idler gear continuously change at each revolution of the crankshaft because the number of teeth of the primary driving gear and the no. 1 valve motion idler gear/sprocket is slightly different, the sprocket teeth will take either of the two positions shown in the figure below relative to the primary driving gear. Each of these two positions occurs alternately at every revolution of the crankshaft.

Downloaded from www.Manualslib.com manuals search engine

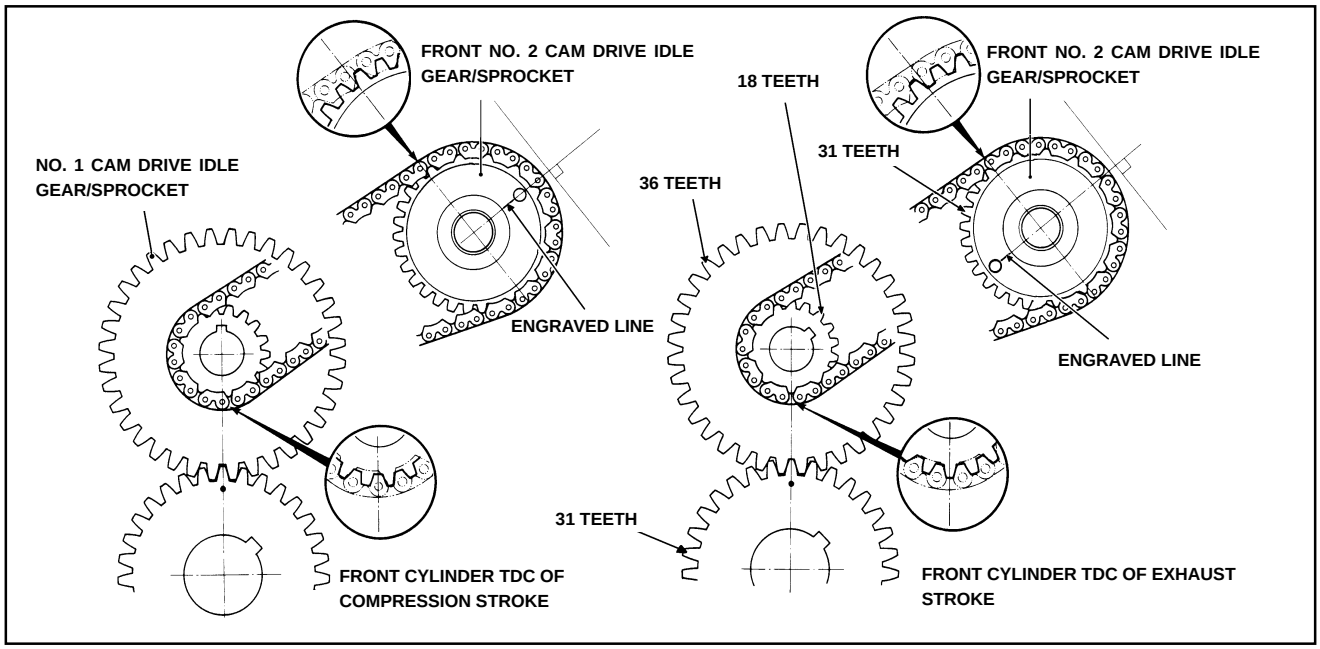

The two top dead centres, one on the compression stroke and the other on the exhaust stroke, can be identified by the position of the punched mark on the no. 1 valve motion idler gear/sprocket relative to the punched mark on the primary driving gear. They can also be distinguished by the position of the engraved line and by the position of the hole in the no. 2 valve motion idler gear/sprocket. If the engraved line is perpendicular to the cylinder head cover mating surface, the front cylinder is at the top dead centre of the compression stroke. If, on the other hand, the engraved line points in the opposite direction, the front cylinder is at the top dead centre of the exhaust stroke.

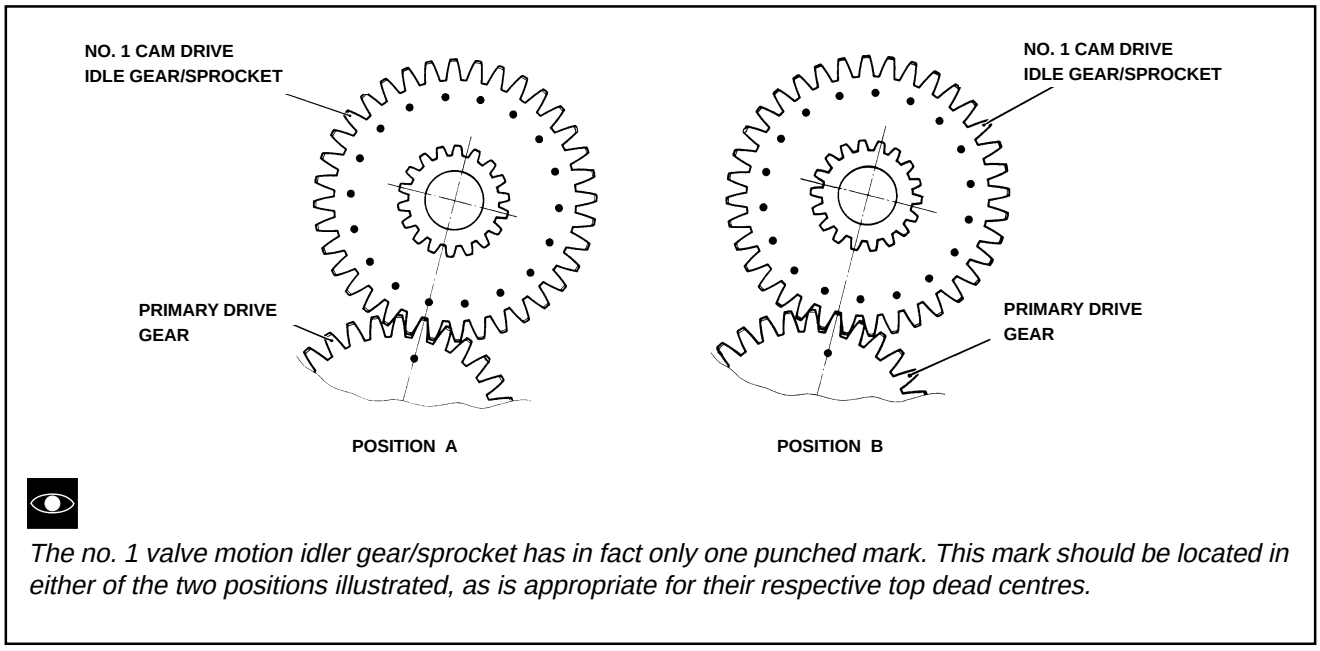

The no. 1 valve motion idler gear/sprocket has in fact only one punched mark. This mark should be located in either of the two positions illustrated, as is appropriate for their respective top dead centres.

Downloaded from www.Manualslib.com manuals search engine

When reassembling the engine, position the no. 1 and no. 2 valve motion idler gears/sprockets at their top dead centres. Improper assembly - such as the positioning of the no. 2 valve motion idler gear/sprocket at the top dead centre of the compression stroke and the no. 1 valve motion idler gear/sprocket at the top dead centre of the exhaust stroke - will cause the timing chain pin to be out of position, move the engraved line away from the perpendicular to the cylinder head cover mating surface and result in improper valve gear timing. Therefore, take special care when carrying out the assembly.

PRECAUTIONS FOR INSTALLATION

No. 2 valve motion idler gear/sprocket

- When installing the front and rear no. 2 valve motion idler gears/sprockets, the cylinder should be at the top dead centre of the compression stroke.
- If the relative positions of the primary drive gear and the no. 1 valve motion idler gear/sprocket cannot be checked because the clutch cover remains installed on the engine, fit the no. 2 valve motion idler gear/sprocket temporarily so that the engraved line is perpendicular to the cylinder head cover mating surface with the crankshaft positioned at the top dead centre. If the line is exactly perpendicular, fit the valve motion idler gear/sprocket in that position; if not, rotate the crankshaft another 360 degrees (1 full turn) and try again (refer to page D-66).

Front camshafts

- When installing the intake and exhaust front camshafts, the front cylinder should be at the top dead centre of the compression stroke.

Rear camshafts

- When installing the intake and exhaust rear camshafts, the front cylinder should be at the top dead centre of the exhaust stroke.

Downloaded from www.Manualslib.com manuals search engine

VALVE TIMING DIAGRAM

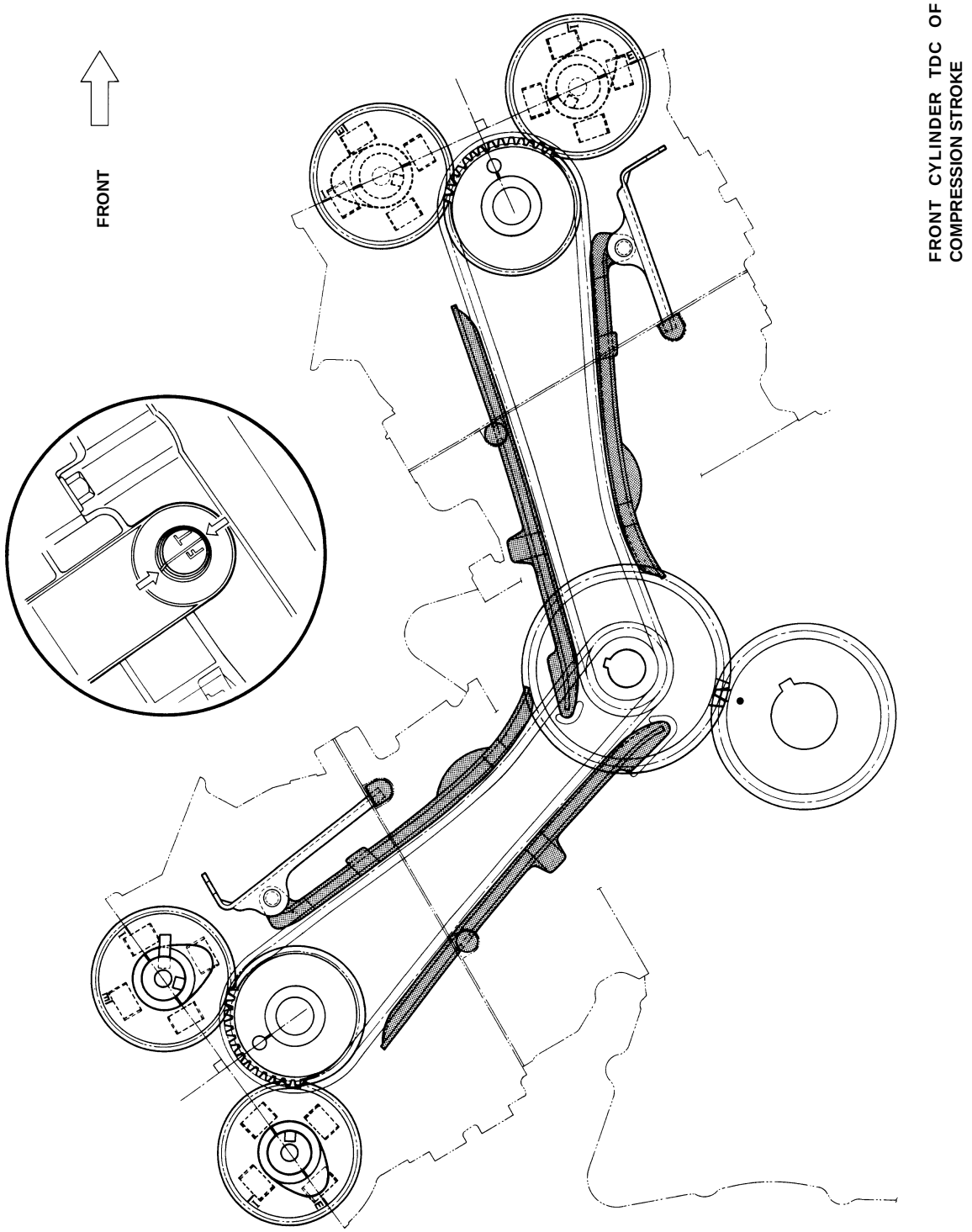

Downloaded from www.Manualslib.com manuals search engine

VALVE TIMING CHART

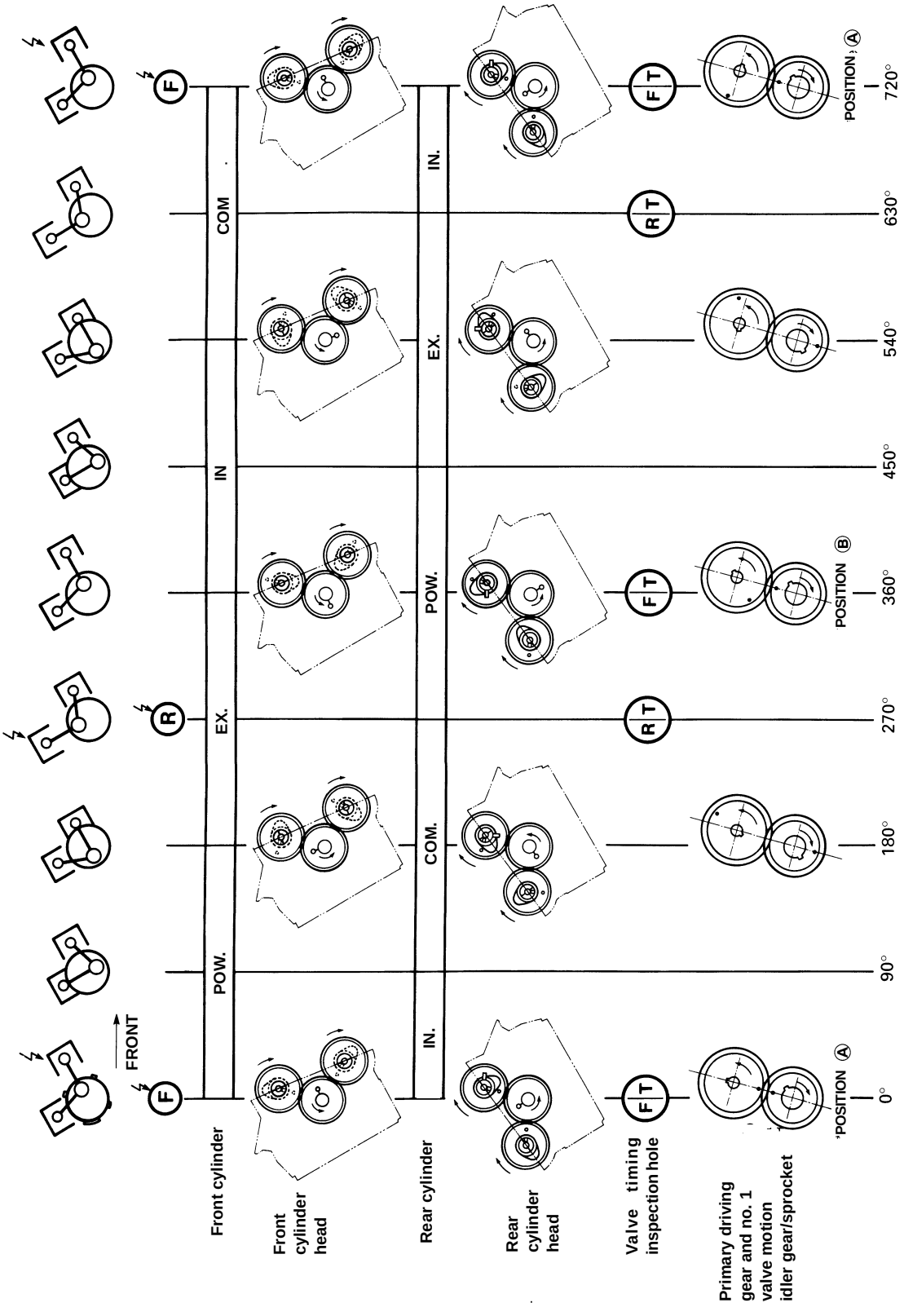

* Refer to figure on page 3A-2.

Downloaded from www.Manualslib.com manuals search engine

REMOVING THE CAMSHAFTS

NO. 1 (FRONT) CAMSHAFTS

To remove the no. 1 (front) camshafts, remove the following parts in the order given below.

Refer to the pages indicated for details on how to perform each step.

Remove:
- The radiator (see page D-5).
- The spark plug (see page B-7.).
- To facilitate the removal, disconnect the engine coolant recovery tube (the small tube) on the radiator by slackening the clamp band.
- The cylinder head cover (see page D-21).

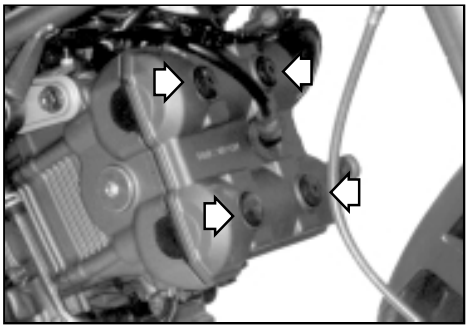

- The tappet inspection hole plug.
- The generator cover plug (see page D-21).

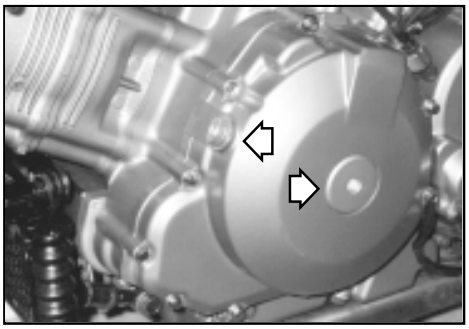

- The camshaft journal bearings (see page D-21).

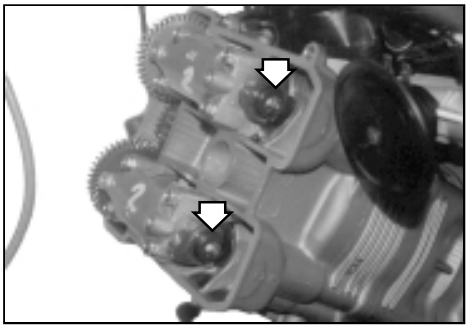

- The intake camshaft.
- The exhaust camshaft (see page D-22)

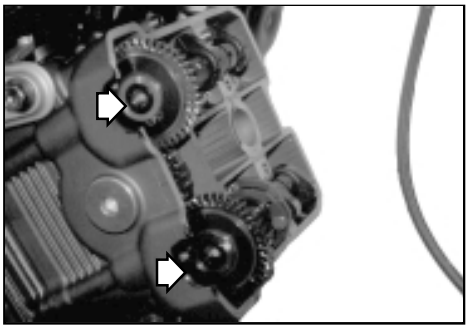

Downloaded from www.Manualslib.com manuals search engine

NO. 2 (REAR) CAMSHAFTS

To remove the no. 2 (rear) camshafts, remove the following parts in the order given below.

Refer to the pages indicated for details on how to perform each step.

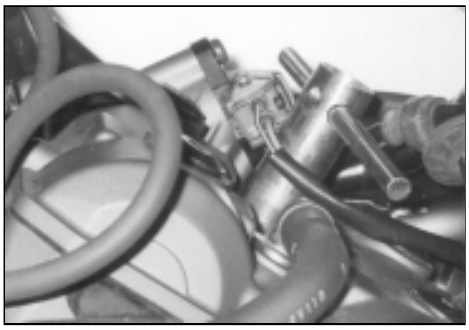

Remove:

- The saddle.
- The spark plug (page B-8).
- The cylinder head cover (see page D-24).

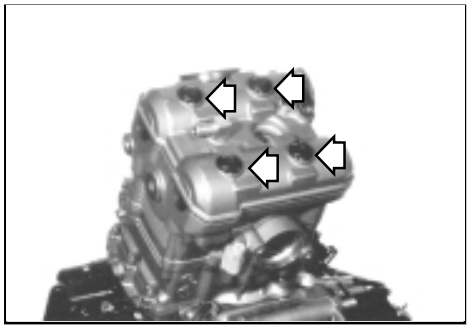

- The tappet inspection hole plug.
- The generator cover plug (see page D-21).

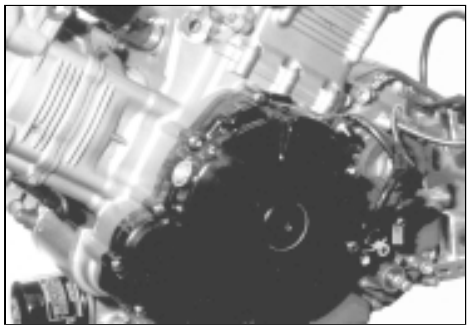

- The camshaft journal bearings (see page D-24).

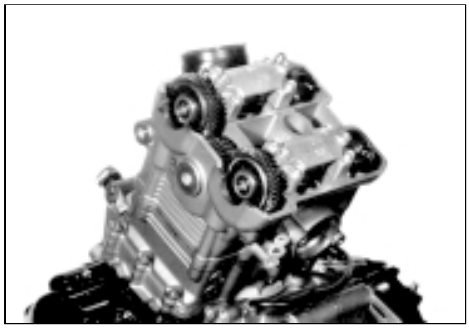

- The intake camshaft.
- The exhaust camshaft (see page D-25).

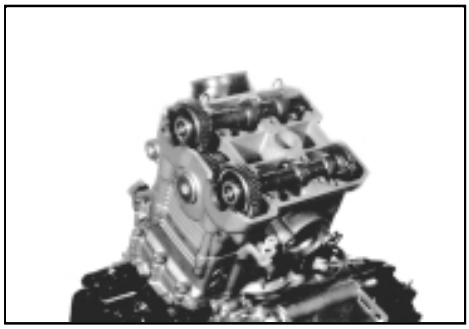

Downloaded from www.Manualslib.com manuals search engine

CHECKING AND SERVICING THE CAMSHAFTS AND THE CYLINDER HEAD

Identify the exact location of each removed component. Sort the parts into groups designated as “No. 1”, “No. 2”, “Exhaust”, “Intake”, etc., so that each part can be restored to its original position during reassembly.

CAMSHAFTS

If abnormal engine noise, vibration or lack of power output is noticed, all camshafts should be checked for signs of runout and wear of the cams and journals. Any of these conditions may occur if the camshafts have become worn or distorted beyond the service limit. The camshafts differ in shape, and are identified by engraved letters.

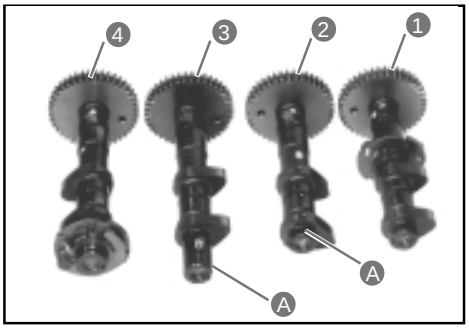

1 No. 1 (front) exhaust camshaft
2 No. 1 (front) intake camshaft
3 No. 2 (rear) intake camshaft
4 No. 2 (rear) exhaust camshaft

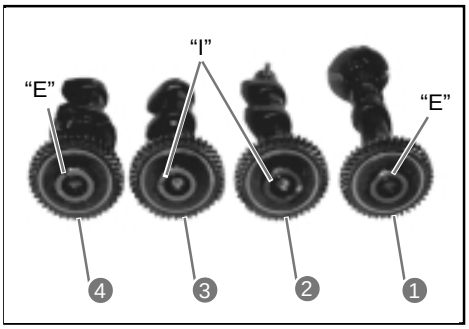

CAM WEAR

Worn-out cams are often the cause of mistimed tappet operation and reduced power output.
The limit of cam wear is specified for the intake and exhaust cams in terms of cam height **H**, to be measured with a micrometer. Replace the camshafts if the cams are worn beyond the specified limit.

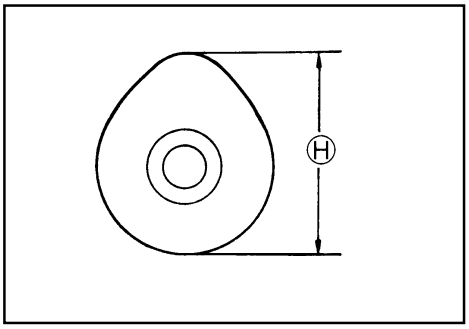

Specific tool: Micrometer (25-50 mm, 0.984-1.968 in)
Service limit
Cam height H

Intake cams	Exhaust cams
37,47 mm (1.475 in)	36,08 mm (1.420 in)

Downloaded from www.Manualslib.com manuals search engine

CAMSHAFT JOURNAL WEAR

To determine whether a camshaft journal is worn beyond the service limit, measure the oil clearance with the camshaft in place. Measure plastigauge **1** in its widest portion to determine the oil clearance, which should be as follows:

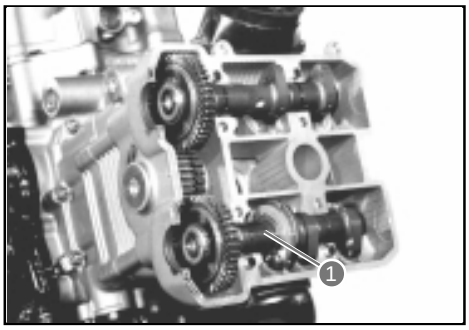

Service limit
Camshaft journal oil clearance (IN. & EX.): 0,150 mm (0.006 in)

Specific tool: 800096651 - Thickness gauge
Specific tool: 800096872 - Thickness gauge

Install the camshaft journal bearings in their original positions (refer to pages D-73 to D-76).

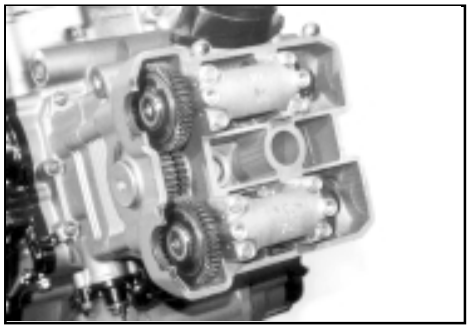

Tighten the camshaft journal bearing bolts with the specified torque. Tighten the bolts evenly and sequentially following a crosswise pattern.

Tightening torque:
Camshaft journal bearing bolt: 10 N·m (1,0 kg-m) (7.3 lb·ft)

Do not turn the camshaft while the plastigauge is in place.

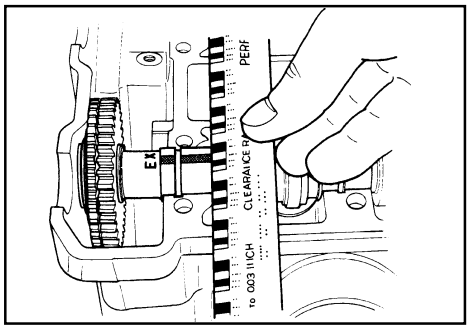

Remove the camshaft journal bearings, and measure the length of the compressed plastigauge with the scale. The measurement should be taken at the widest portion.

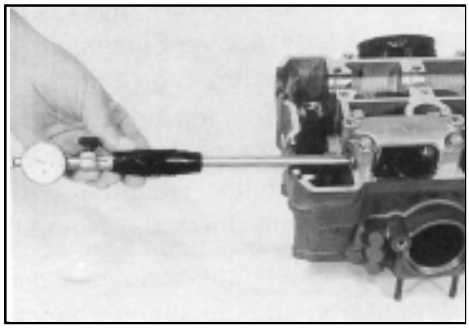

If the measured camshaft journal oil clearance exceeds the specified limit, measure the inside diameter of the camshaft bearing and the outside diameter of the camshaft journal. Replace the camshaft or the cylinder head depending on which one is out of specification.
Standard
Camshaft bearing I.D. (IN. & EX.): 22,012-22,025 mm (0.8666-0.8671 in)

Specific tools:
Comparator (1/1000 mm, 1 mm, 0.039 in)
Small bore gauge (18-35 mm, 0.709-1.378 in)
Standard
Camshaft journal O.D. (IN. & EX.): 21,972-21,993 mm (0.86504-0.86586 in)
Specific tool: Micrometer (0-25 mm, 0-0.984 in)

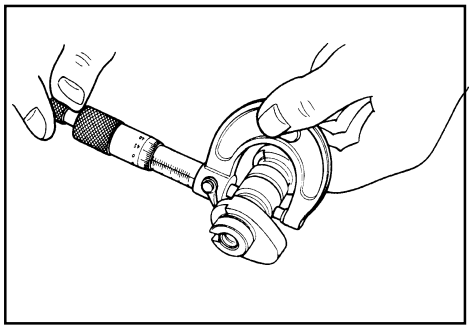

Downloaded from www.Manualslib.com manuals search engine

CAMSHAFT RUNOUT

Measure the runout with a comparator. Replace the camshaft if the runout exceeds the specified limit.

Service limit

Camshaft runout (IN. & EX.): 0,1 mm (0.0039 in)

Specific tools: **Comparator (1/100 mm, 10 mm) (0.039/3.937 in, 0.3937 in)**
Magnetic stand
800096650: V-blocks

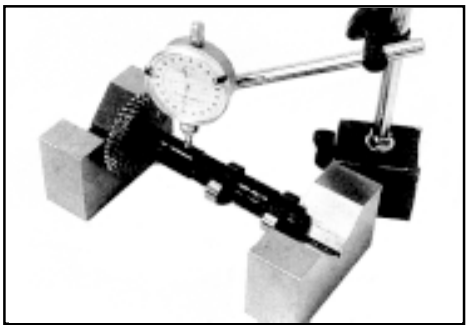

CAMSHAFT GEARS AND AUTOMATIC DECOMPRESSOR

Check the gear teeth for wear and damage.
Inspect the automatic decompressor for damage and ensure it is in working order.
If any defects are found, replace the camshafts and the timing chain as a set.

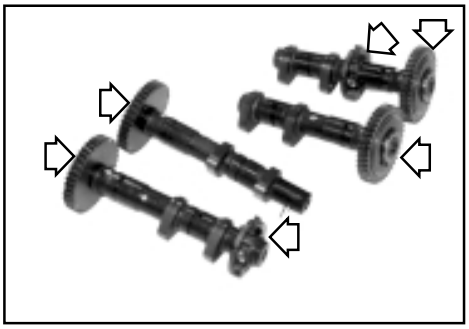

Do not attempt to disassemble the gears and the automatic decompressor unit. They are unserviceable.

TIMING CHAIN TENSION ADJUSTER

The timing chain tension adjusters are maintained at the proper tension automatically. Release ratchet **A** and move push rod **B** into position to see if it slides freely. If the push rod is difficult to move, or if the ratchet mechanism is faulty, replace the timing chain tension adjuster assembly with a new one.

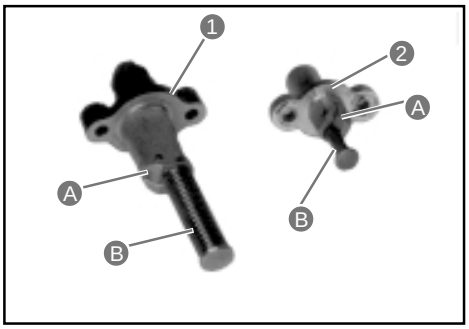

1 Front timing chain tension adjuster
2 Rear timing chain tension adjuster

TIMING CHAIN GUIDE AND CHAIN STRETCHER

Check the timing chain guide and the chain stretcher for wear and damage. If they are damaged, replace them with new parts.

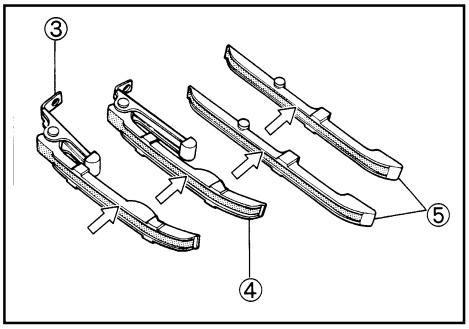

3 Front timing chain stretcher
4 Rear timing chain stretcher
5 Front and rear timing chain guides

Downloaded from www.Manualslib.com manuals search engine

CYLINDER HEAD

- Remove the tappets and shims **1** either manually or using a magnet.

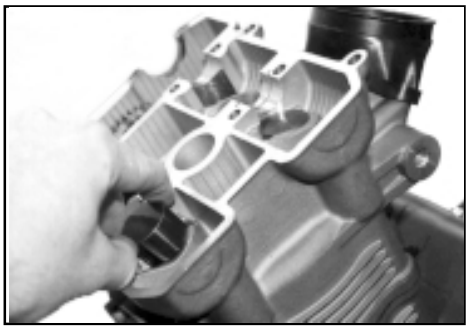

- Utilizzando gli attrezzi speciali, comprimere le molle della valvola e rimuovere i due semiconi **2** dallo stelo della valvola.

Specific tools: **800096664: Valve spring compression tool**
800096665: Valve spring compression attachment
Tweezers

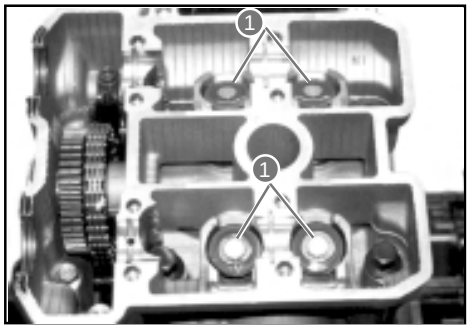

- Remove valve spring retainer **3** and valve springs **4**.

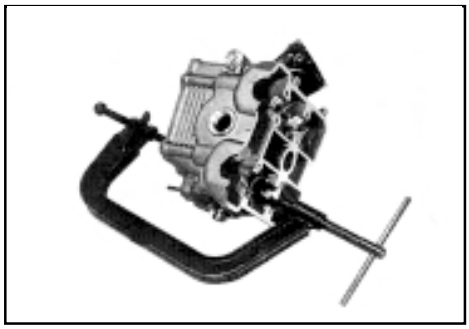

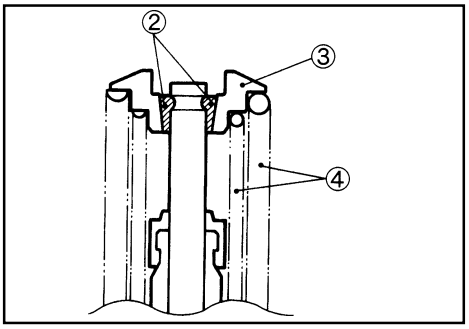

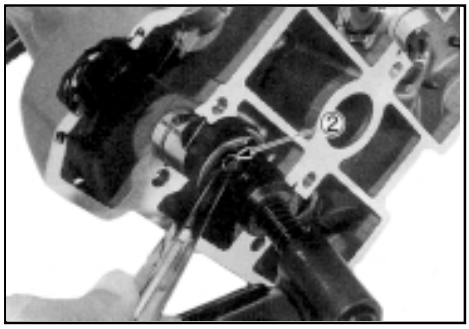

- Pull out the valve from the opposite side.

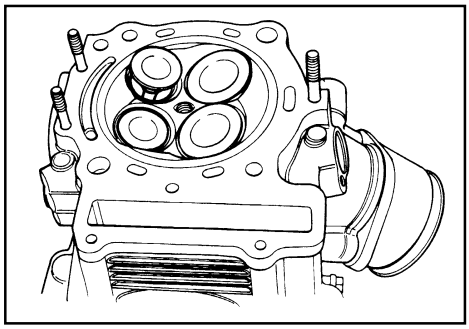

Downloaded from www.Manualslib.com manuals search engine

• Remove oil seals **1** and spring seats **2**

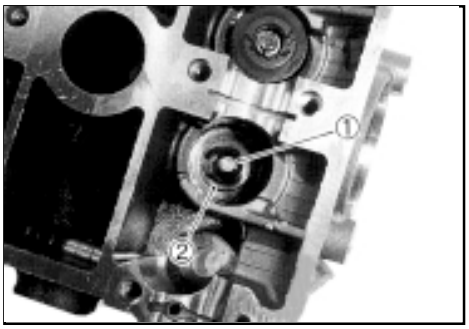

Do not reuse the oil seals.

CYLINDER HEAD DISTORTION

Decoke the combustion chambers.
Check the gasketed surface of the cylinder head for distortion using a straightedge and a thickness gauge. Take measurements at the positions shown in the figure. If the maximum reading at any position exceeds the specified limit, replace the cylinder head.

Specific tool: Thickness gauge
Service limit
Cylinder head distortion: 0,05 mm (0.00197 in)

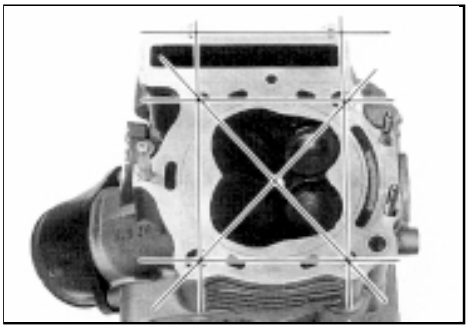

VALVE STEM RUNOUT

Support the valve with V-blocks and check its runout with a comparator.
Replace the valve if the runout exceeds the specified limit.

Specific tools: **Comparator** **(1/100 mm, 10 mm)**
(0.039/3.937 in, 0.3937 in)
Magnetic stand
800096650: V-blocks

Service limit
Valve stem runout: 0,05 mm (0.00197 in)

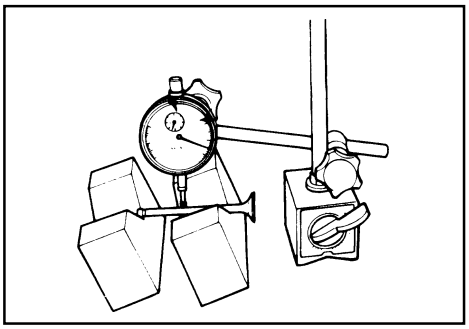

VALVE HEAD RADIAL RUNOUT

Place the comparator at right angles to the valve head face, and measure the radial runout.
If it exceeds the specified limit, replace the valve.

Specific tools: **Comparator** **(1/100 mm, 10 mm)**
(0.039/3.937 in, 0.3937 in)
Magnetic stand
800096650: V-blocks

Service limit
Valve head radial runout: 0,03 mm (0.00118 in)

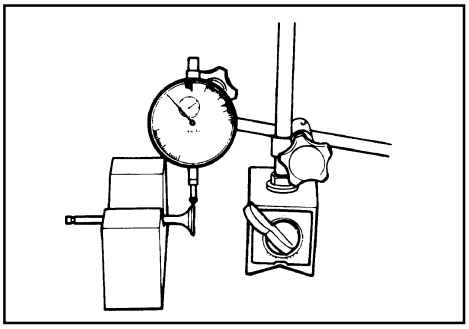

VALVE SEAL SURFACE WEAR

Visually inspect the seal surface of each valve for signs of wear. Replace any abnormally worn valve. Thickness **T** decreases as wear increases.
Measure the thickness and, if it is less than specified, replace the valve.

Specific tool: Caliper
Service limit
Valve head thickness T: 0,5 mm (0.0197 in)

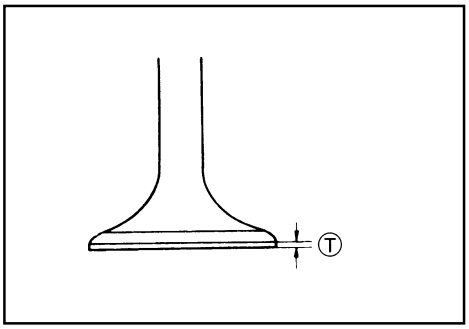

Downloaded from www.Manualslib.com manuals search engine

VALVE STEM DEFLECTION

Lift the valve about 10 mm (0.3937 in) over the valve seat. Position the comparator as shown in the figure and measure the valve stem deflection in the two directions, perpendicular to each other, X and Y. If the deflection exceeds the specified limit (see below), determine whether the valve or the guide need to be replaced.

Specific tools: Comparator (1/100 mm, 10 mm)
(0.039/3.937 in, 0.3937 in)
Magnetic stand

Service limit
Valve stem deflection (IN. & EX.): 0.35 mm

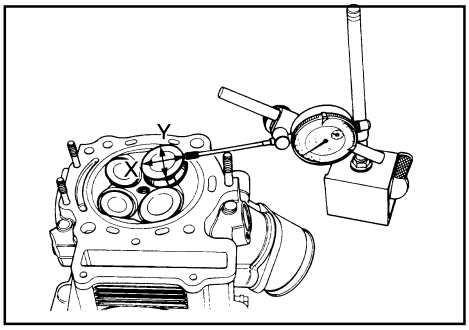

VALVE STEM WEAR

If the valve stem is worn down to the limit, as measured with a micrometer, and the clearance is found to be in excess of the specified limit, replace the valve. If the stem is within the limit, replace the guide. Check the clearance again after replacing the valve or the guide.

Specific tool: Micrometer (0-25 mm, 0-0.984 in)
Standard
Valve stem O.D. (IN.) : 5,475-5,490 mm (0.2155-0.2161 in)
(EX.) : 5,455-5,470 mm (0.2148-0.2153 in)

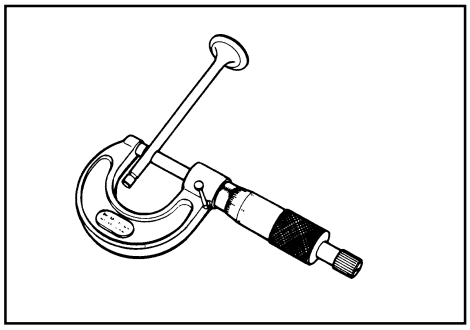

If the valve guides need to be removed in order to be replaced after checking the related parts, follow the procedure described in the VALVE GUIDE SERVICING paragraph below.

VALVE GUIDE SERVICING

- Using the valve guide remover, drive the valve guide out towards the intake or exhaust camshaft side.

Specific tool: 800096671 - Valve guide remover/installer

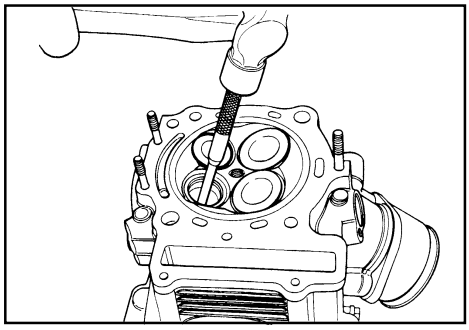

** Discard the removed valve guide components.*
** Only oversized valve guides are available as spares.*

- Finish the valve guide holes in the cylinder head with the reamer and its handle.

Specific tools: 800096670 - Valve guide reamer (10,8 mm)
(0.425 in)
800096668 - Reamer handle

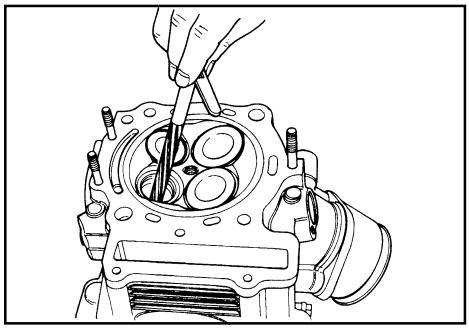

Downloaded from www.Manualslib.com manuals search engine

- Lubricate the hole in the cylinder head and the stem hole of each valve guide and then insert the guide into the hole using the valve guide installer and its attachment.

Specific tools: 800096671 - Valve guide remover/installer
800096672 - Valve guide installer attachment

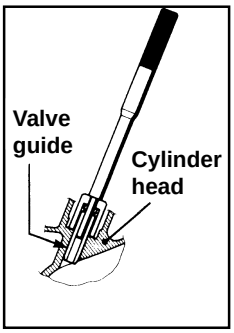

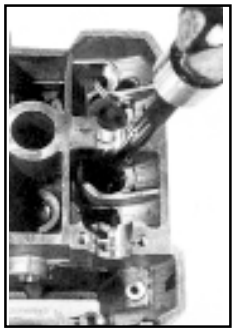

Failure to oil the valve guide hole before fitting the new guide may result in a damaged guide or cylinder head.

- After fitting the valve guides, finish their holes with the reamer. Be sure to clean and oil the guides after the reaming.

Specific tools: 800096669 - Valve guide reamer (5,5 mm) (0.216 in)
800096668 - Reamer handle

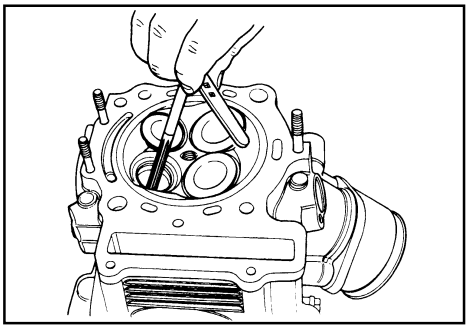

Insert the reamer from the combustion chamber and always turn the reamer handle clockwise.

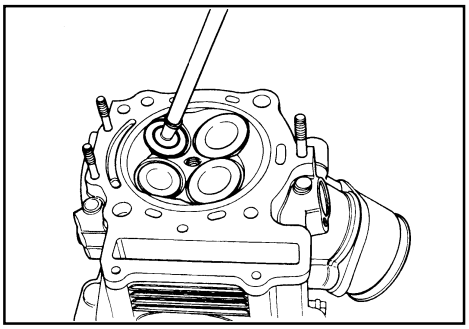

VALVE SEAT WIDTH

- Coat the valve seat with an even layer of Prussian blue. Fit the valve and rotate it to obtain a clear impression of the seating area. In this operation, use the valve lapper to hold the valve head.
- The circular impression left on the valve seating area must be continuous, without any breaks. In addition, the width of the coloured ring, representing the “width” of the seating area, must be in the range specified below.

Specific tools: Valve lapper set
Standard
Valve seating width W: 0,9-11 mm (0.035-0.433 in)

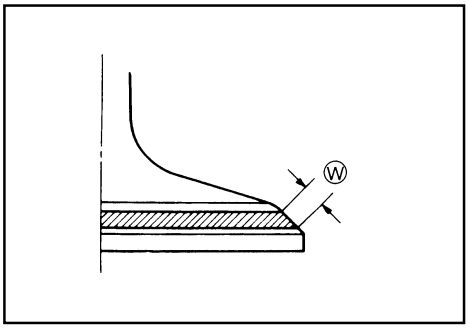

If either requirement is not met, correct the seat by proceeding as follows:

VALVE SEAT SERVICING

The valve seats for both the intake and exhaust valves are machined to four different angles (the valve seating area is cut at 45°).

	INTAKE	EXHAUST
45°	N-615 o N-626	N-615 o N-626
60°	N-211	N-211
15°		N-615
30°	N-626	

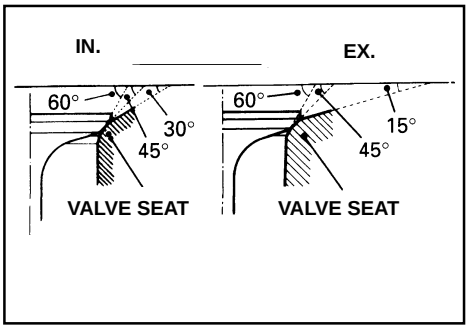

Specific tool: Valve seat cutter - (N-615), (N-211) and (N-626)
Guide - (N-140-5.5)

Downloaded from www.Manualslib.com manuals search engine

The valve seating area must be inspected after each cut.

Specific tools: 96768 - Valve seat cutter (N-626)
800096667 - Valve seat working guide (N-140-5.5)
800096666 - Valve seat working set

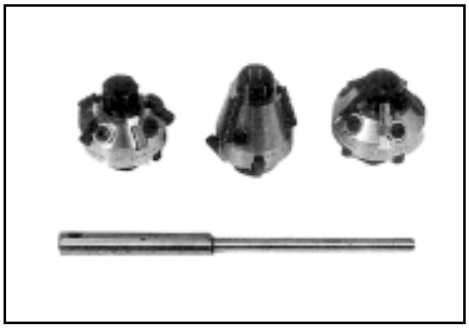

- Insert the guide with a slight rotation. Seat the guide snugly. Fit the 45° cutter, the attachment and the T-handle.
- Using the 45° cutter, decoke and clean up the seat with one or two turns.
- Check the seat using the previously described width measurement procedure. If the seat is pitted or burnt, give it another pass with the 45° cutter.

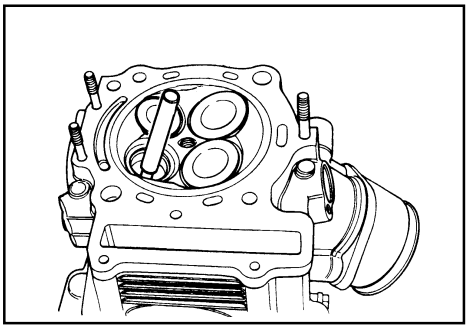

To avoid changing the tappet shim, cut the seat as little as possible.

If the seating area is positioned too high on the valve, or if it is too wide, lower or narrow it by using 15°/60° cutters on the exhaust side and 30°/60° cutters on the intake side.

Seating area too high and too wide.

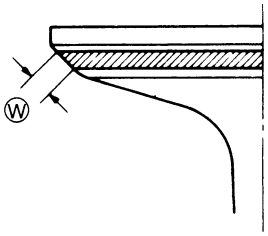

If the seating area is too low or too narrow, raise or widen it using the 45° cutter.

Seating area too low and too narrow

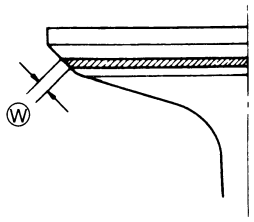

- After obtaining the desired valve seat position and width, use the 45° cutter lightly to remove any burrs caused by the previous cutting operations.

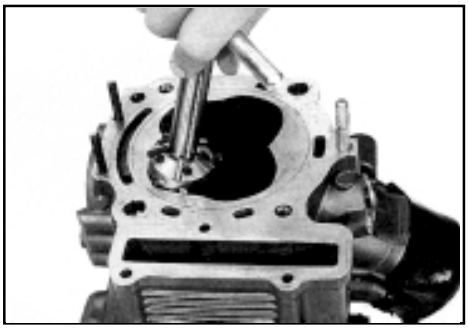

DO NOT use lapping compounds after the final cut is made. The finished valve seat should have a velvety smooth finish, not a polished and shiny appearance.
This will provide a soft surface for the final seating of the valve, which will occur during the first few seconds of engine operation.

Downloaded from www.Manualslib.com manuals search engine

- Clean and fit the cylinder head and valve components. Fill the intake and exhaust ports with petrol and check that there are no leaks. If any leaks are found, check for burrs or other factors that prevent the valve seat and the seating surface from sealing properly.

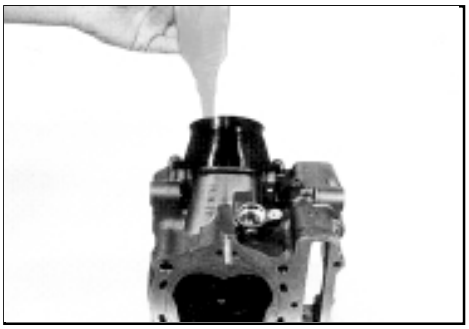

Handle petrol with the utmost care.

After servicing the valve seats and reinstalling the cylinder head, be sure to check the tappet clearance (see pages 2-6 to 2-10).

VALVE SPRING

The push of the spiral spring ensures the valve seal. A weakened spring results in reduced power output and often accounts for abnormal noise from the valve gear mechanisms. Check the strength of the springs by measuring their free length and the force required to compress them. If the free length is less than specified, or if the force required for compression is not in the specified range, replace both the inner and the outer spring.

Specific tool: Caliper
Service limit
Valve spring free length (IN. & EX.):
INNER - 37,0 mm (1.457 in)
OUTER - 40,7 mm (1.602 in)
Standard
Valve spring tension (IN. & EX.):
INNER - 6,2 kg/33,1 mm (13.668 lb/1.303 in)
OUTER - 15,4 kg/36,6 mm (33.951 lb/1.441 in)

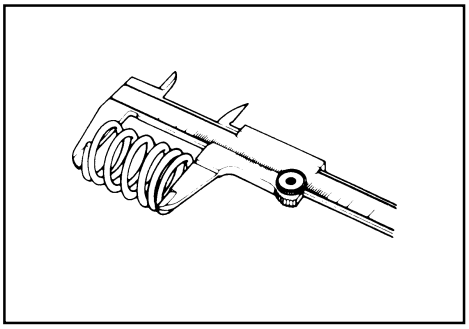

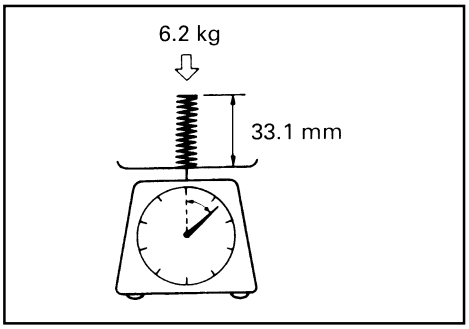

Downloaded from www.Manualslib.com manuals search engine

NO. 2 VALVE MOTION IDLER GEAR/SPROCKET THRUST CLEARANCE

Install no. 2 valve motion idler gear/sprocket **1**, its shaft **2**, copper washer **3** and thrust washer **4** on each cylinder head as shown in the figure. Tighten shaft **2** with the specified torque. Using a thickness gauge, measure the thrust clearance between the cylinder head and thrust washer **4**.

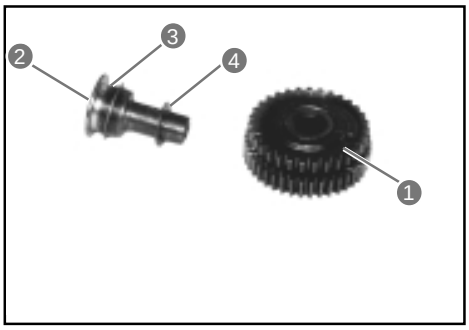

Tightening torque:
No. 2 valve motion idler gear/sprocket shaft: 40 N·m (4,0 kg-m) (29.2 lb·ft)

Specific tool: Thickness gauge
Standard
No. 2 valve motion idler gear/sprocket thrust clearance: 0,15-0,29 mm (0.0059-0.0114 in)

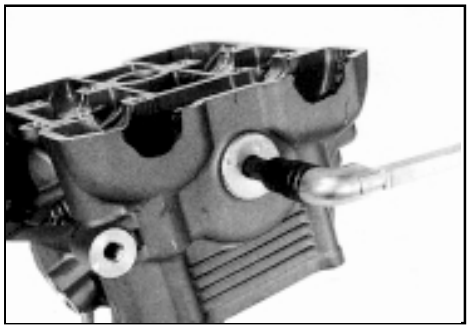

If the thrust clearance exceeds the specified range, adjust it by following these steps:

- Remove the thrust ring and measure its thickness with a micrometer.
- If the clearance is not as specified, change the thrust washer with a different one.
- Measure the thrust clearance again as described above.

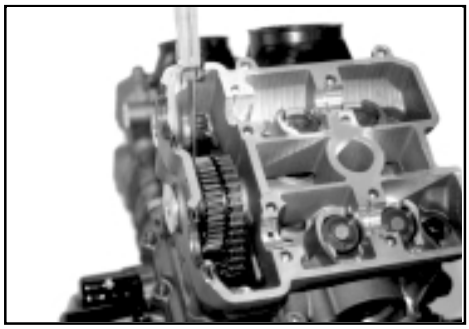

Specific tool: Micrometer (0-25 mm, 0-0.984 in)



Standard check

Unit: mm/in

Colour/Mark (part no.)	Thrust washer thickness A
Blue (800096154)	1,38-1,42 (0.0543-0.0559 in)
Yellow (800096153)	1,28-1,32 (0.0503-0.0520)
Light blue (800096152)	1,18-1,22 (0.0464-0.0480 in)
Light green (800096151)	1,08-1,12 (0.0425-0.0441)
Brown (800096150)	0,98-1,02 (0.0386-0.0402 in)
"J" mark (800096149)	0,88-0,92 (0.0346-0.0362 in)

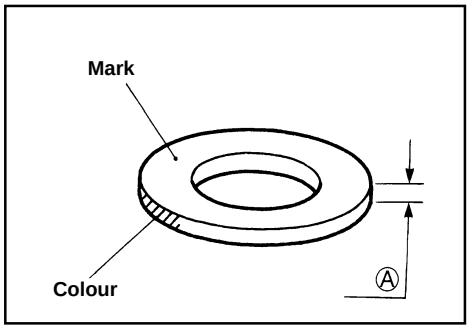

Downloaded from www.Manualslib.com manuals search engine

CYLINDER HEAD ASSEMBLY

- Fit the valve spring seats.
- Oil all the oil seals and fit them using the valve guide installer.

Specific tool: 800096671 - Valve guide remover/installer

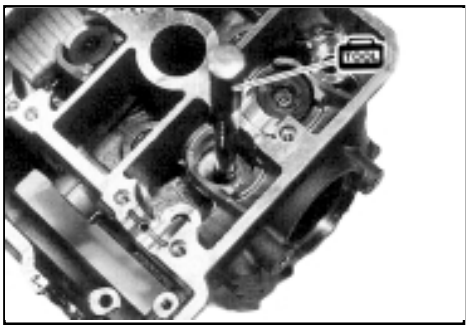

Never reuse used oil seals.

- Insert the valves after lubricating their stems completely and evenly with good-quality molybdenum bisulphide.

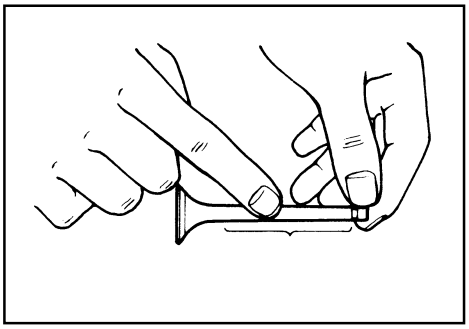

When inserting the valves, take care not to damage the oil seal lips.

Specific product: MOLIKOTE

- Fit the valve springs with small-pitch portion **A** facing the cylinder head.

B: large-pitch portion

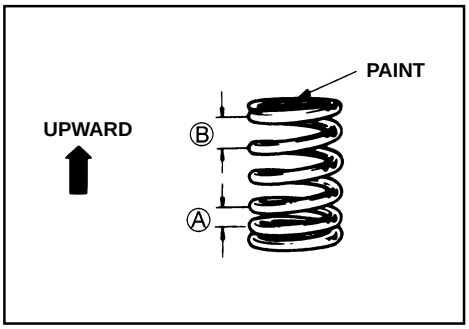

- Fit the spring valve retainer and, using the valve lifter, compress the springs, fit the cotter halves to the stem end, and then release the tool to allow cotters **1** to wedge between the retainer and the stem. Ensure that rounded lip **C** of the cotter halves fits snugly into groove **D** in the stem end.

Specific tools: **800096664 - Valve spring compression tool**
800096665 - Valve spring compression attachment
Tweezers

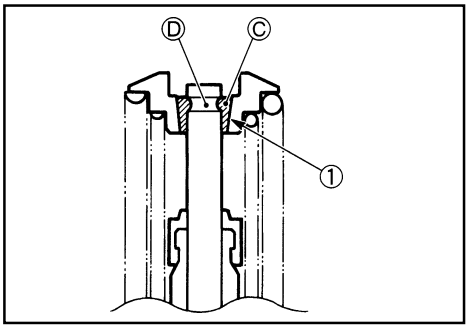

Be sure to restore the valves and the springs to their original positions.

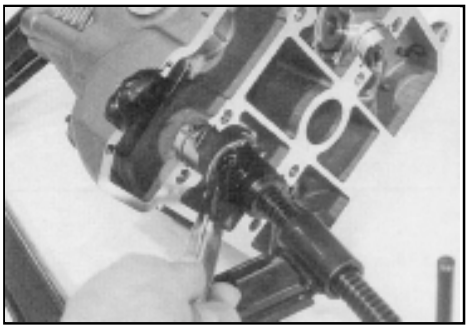

Downloaded from www.Manualslib.com manuals search engine

- Fit the tappet biscuit and pad in their original positions.

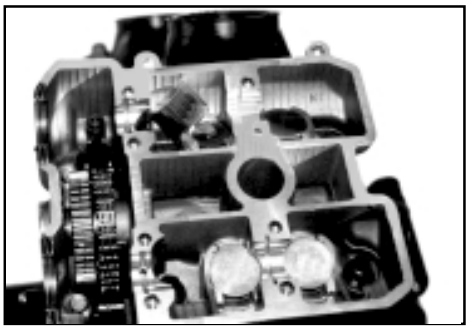

** Apply engine oil to the tappet biscuit and pad before fitting them.*
** Be sure to insert the tappet pad so that the surface stamped with a figure faces the tappet.*

INTAKE PIPE

- Grease the O-ring when installing the intake pipe.

Specific product: AGIP GREASE 30

- When fitting the intake pipe screws, apply a small quantity of specific product to the screw threads.

Specific product: LOC-TITE 243

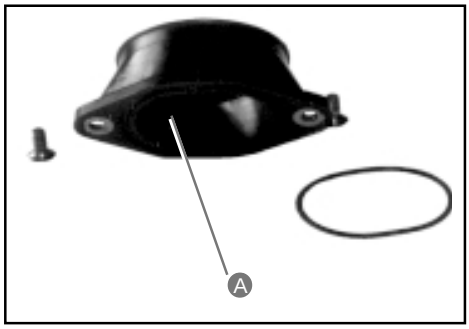

*Ensure that "UP" mark **A** faces upwards.*

Use a new O-ring to prevent air from being sucked in through the joint.

EXHAUST PIPE

- When installing the rear exhaust pipe, tighten the bolts with the specified torque.

Tightening torque:
Exhaust pipe bolt **23 N·M (2,3 kg-m) (16.79 lb·ft)**

To prevent leakages of exhaust gas, be sure to use a new gasket.

CAMSHAFT POSITION SENSOR

- When installing the camshaft position sensor, tighten its bolts with the specified torque.

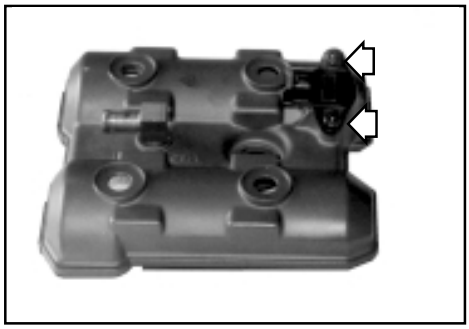

Tightening torque:
Camshaft position sensor fastening bolt **8 N·m (0,8 kg-m) (5.84 lb·ft)**

To prevent oil leakage, use a new sealing ring.

Downloaded from www.Manualslib.com manuals search engine

INSTALLING THE CAMSHAFTS

NO. 1 (FRONT) CAMSHAFT

Installation is obtained by following the disassembling procedure in reverse order.

Refer to the pages indicated for details on how to perform each step.

Fit:
- The camshafts.
- The dowel pins
- The C-rings (see pages D-72 -73).

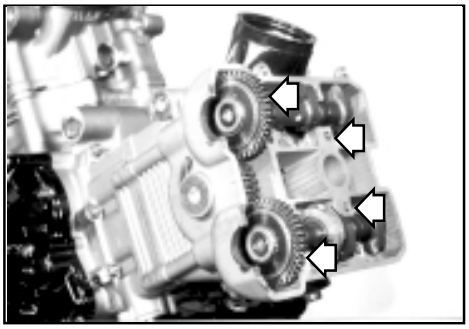

- The camshaft journal bearings (see page D-74).

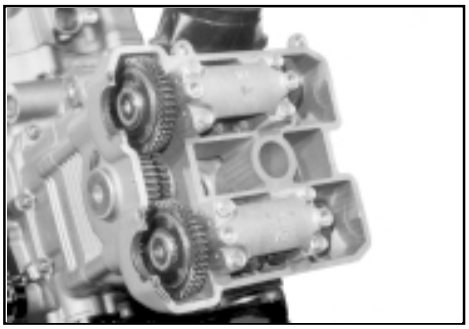

- The generator cover plug.
- The tappet timing inspection plug (see page D-79).

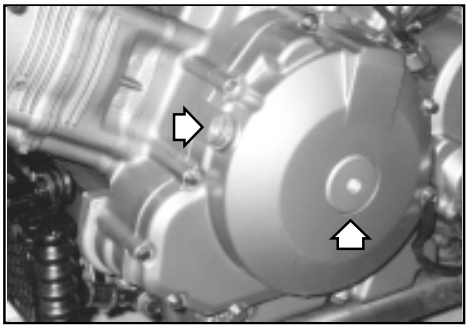

- The cylinder head cover (see pages D-78 -79).

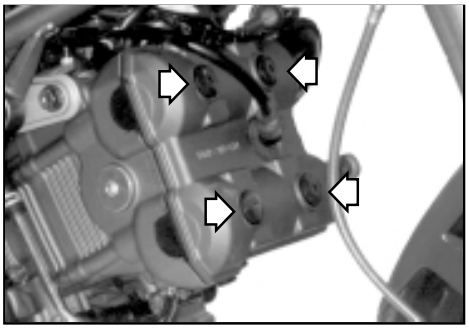

Downloaded from www.Manualslib.com manuals search engine

- The spark plug.
- The radiator (see page H-8).



NO. 2 (REAR) CAMSHAFT

Install the components listed below in the order indicated.

When fitting the components, follow the fitting procedures described in the pages indicated.

Fit:

- The camshafts.
- The dowel pins.
- The C-rings (see page D-75).

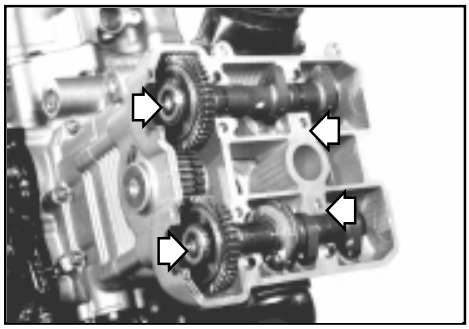

- The camshaft journal bearings (see page D-76).

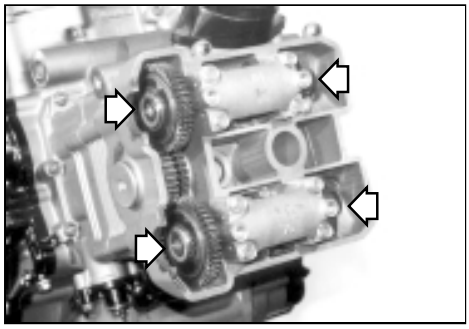

Downloaded from www.Manualslib.com manuals search engine

- The generator cover plug.
- The tappet timing inspection plug (see page D-79).

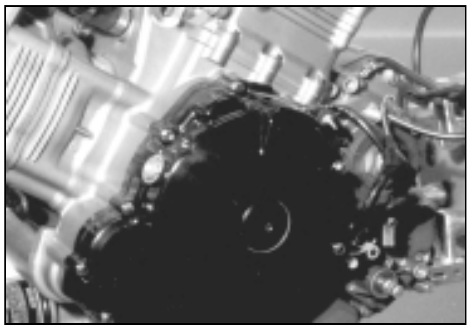

- The cylinder head cover (see pages D-78 -79).

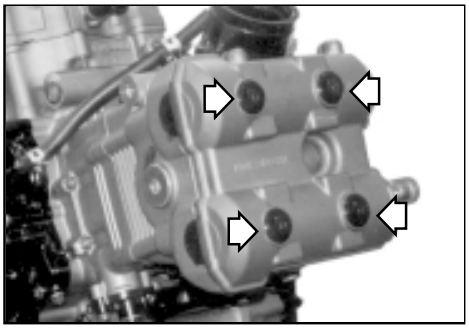

- The spark plug.

Downloaded from www.Manualslib.com manuals search engine

CYLINDER/PISTON

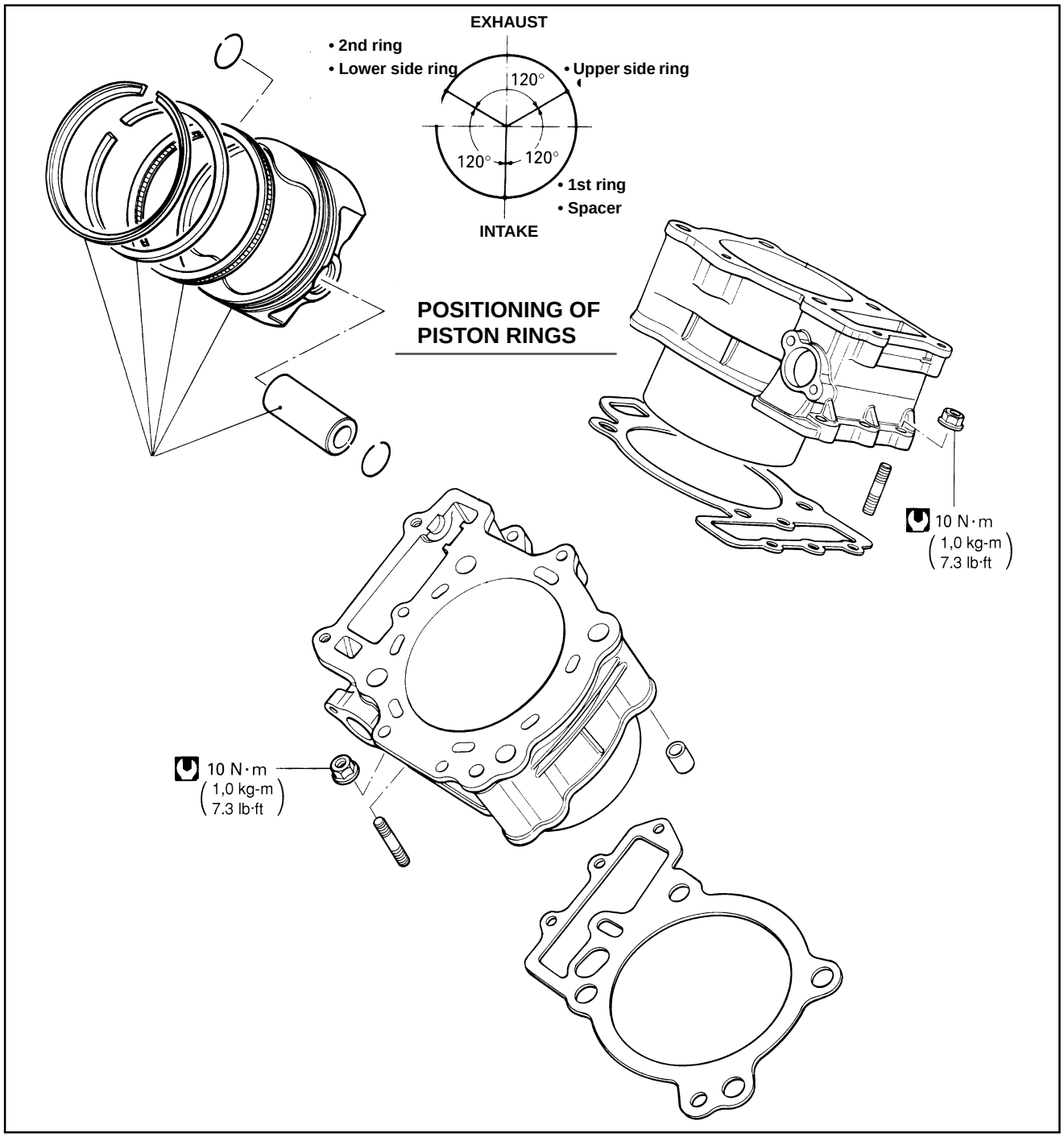

CONTENTS

REMOVING THE CYLINDER AND THE PISTON D-106
CHECKING THE CYLINDER AND THE PISTON D-108
INSTALLING THE CYLINDER AND THE PISTON D-111

Downloaded from www.Manualslib.com manuals search engine

CREMOVING THE CYLINDER AND THE PISTON

NO. 1 (FRONT) CYLINDER AND PISTON

The components listed below must be removed in the order indicated before removing the no. 1 (front) cylinder and piston.

Refer to the pages indicated for details on how to perform each step.

Remove:

- The cylinder head (see pages D-21 -23).

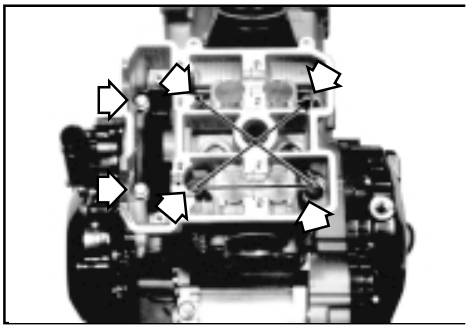

- The timing chain guide.
- The cylinder head gasket.
- The dowel pins (see page D-23).

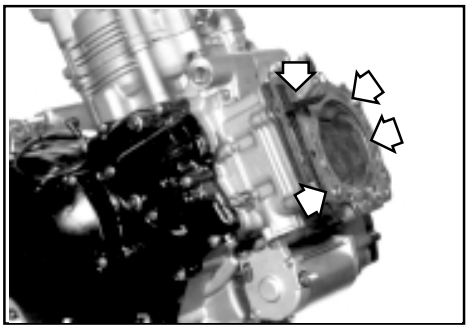

- The cylinder (see page D-23).

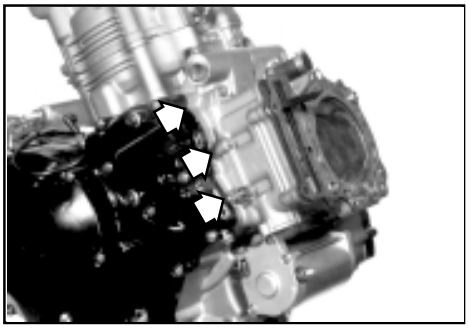

- The piston pin.
- The piston (see page D-24).

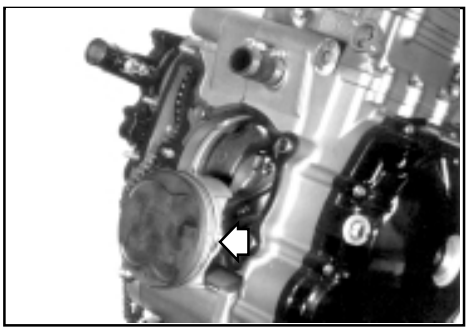

Downloaded from www.Manualslib.com manuals search engine

NO. 2 (REAR) CYLINDER AND PISTON

The components listed below must be removed in the order indicated before removing the no. 2 (rear) cylinder and piston.

Refer to the pages indicated for details on how to perform each step.

Remove:

- The cylinder head (see page D-26).

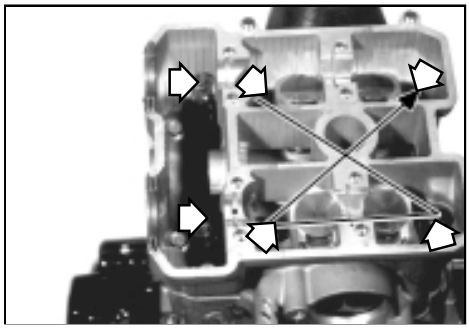

- The timing chain guide.
- The cylinder head gasket.
- The dowel pins (see page D-27).

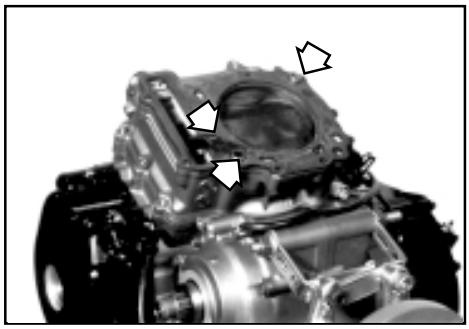

- The cylinder (see page D-27).

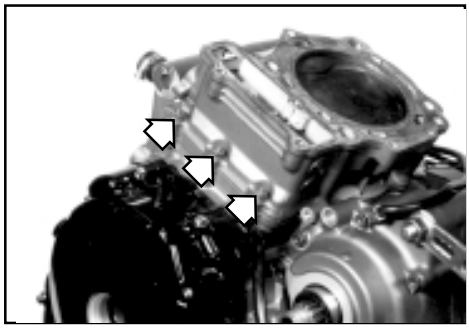

- The piston pin.
- The piston (see page D-27).

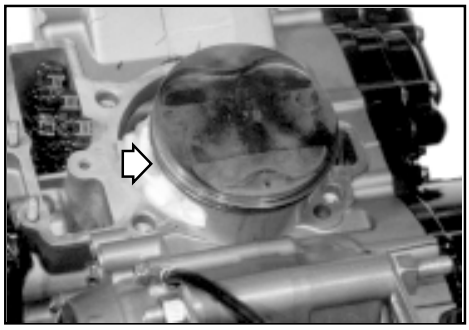

Downloaded from www.Manualslib.com manuals search engine

CHECKING THE CYLINDER AND THE PISTON

CYLINDER BLOCK DISTORTION

Check the gasketed surface of the cylinder block for distortion using a straightedge and a thickness gauge. Take measurements at the positions shown in the figure. If the maximum reading at any position exceeds the specified limit, replace the cylinder block.

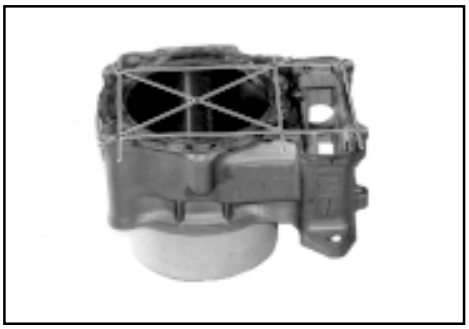

Specific tool: Thickness gauge
Service limit
Cylinder distortion: 0,05 mm (0.00197 in)

CYLINDER BARREL

Check if the barrel wall is scratched, pitted or damaged. Measure the barrel diameter at six different points.

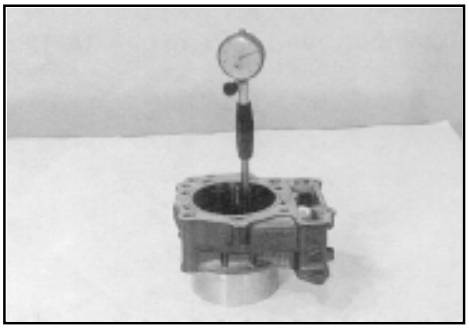

Standard
Cylinder barrel: 98,000-98,015 mm (3.85826-3.85885 in)

Specific tool: Comparator

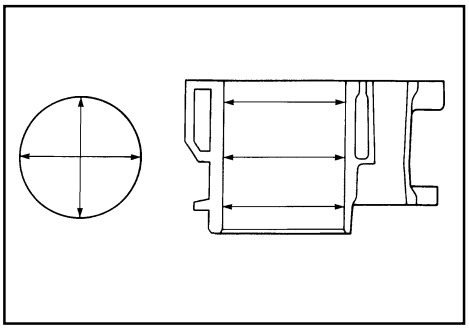

PISTON DIAMETER

Using a micrometer, measure the outside diameter of the piston in the position shown in the figure. If the measurement is less than the specified limit, replace the piston.

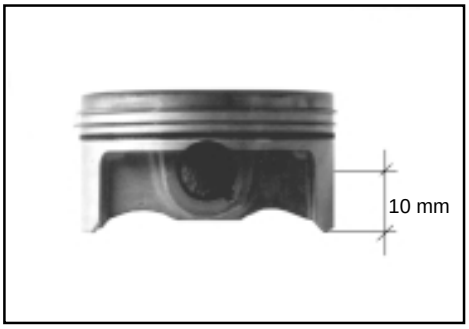

Service limit
Piston diameter: 97,880 mm (3.85353 in)

Specific tool: Micrometer (75-100 mm, 2.953-3.937 in)

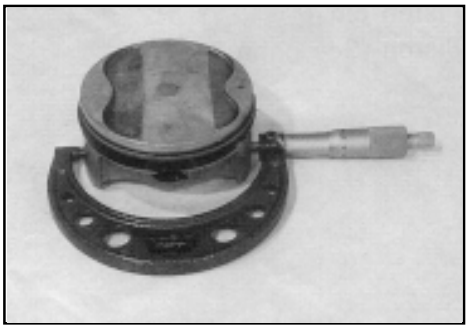

Downloaded from www.Manualslib.com manuals search engine

PISTON/CYLINDER CLEARANCE

After completing the previously described measurement, if the clearance between the piston and the cylinder exceeds the specified limit, replace both the cylinder and the piston.

Service limit
Piston/cylinder clearance: 0,12 mm (0.0047 in)

PISTON RING/PISTON GROOVE CLEARANCE

Using a thickness gauge, measure the side clearance of the 1st and 2nd piston rings. If either of the two clearances exceeds the specified limit, replace both the piston and the piston rings.

Specific tools: **Thickness gauge**
Micrometer (0-25 mm, 0-0.984 in)

Service limit
Piston ring/groove clearance **(1st): 0,18 mm (0.0071 in)**
(2nd): 0,15 mm (0.0059 in)

Standard
Groove width **(1st): 0,93-0,95 mm (0.0367-0.0374 in)**
1,55-1,57 mm (0.0610-0.0618 in)
(2nd): 1,01-1,03 mm (0.0398-0.0405 in)
(Scraper): 2,51-2,53 mm (0.0988-0.100 in)

Standard
Piston ring thickness **(1st): 0,84-0,89 mm (0.0330-0.0353 in)**
1,40-1,42 mm (0.0551-0.0560 in)
(2nd): 0,97-0,99 (0.0381-0.0389 in)

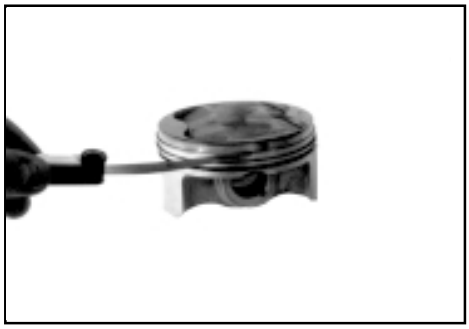

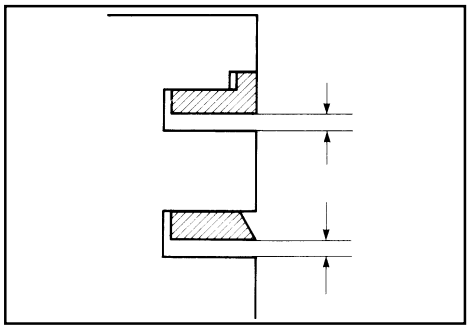

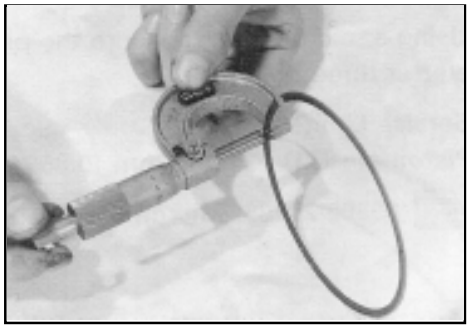

Downloaded from www.Manualslib.com manuals search engine

PISTON RING FREE END GAP AND PISTON RING END GAP

Before fitting the piston rings, measure the free end gap of each ring using a vernier caliper. Then fit the ring in the cylinder and measure the end gap of the ring using a thickness gauge. If the end gap is excessive, replace the ring.

Service Limit

Piston ring free end gap **(1st): 5,4 mm (0.2125 in)**
(2nd): 7,9 mm (0.3110 in)

Specific tool: Caliper

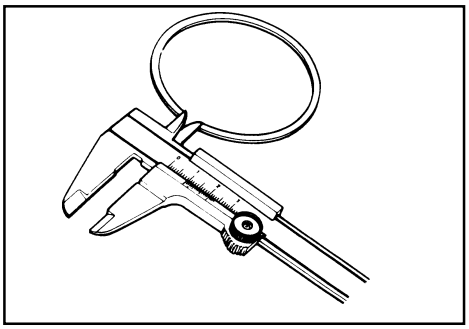

Service Limit

Piston ring end gap **(1st): 0,5 mm (0.0197 in)**
(2nd) 0,5 mm (0.0197 in)

Specific tool: Thickness gauge

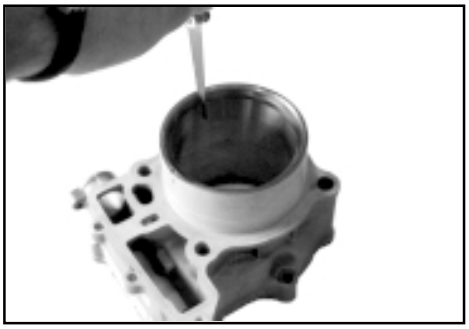

PISTON PIN AND PISTON PIN BORE

Using a bore gauge, measure the inside diameter of the piston pin bore and then, using a micrometer, measure the outside diameter of the piston pin at three different points. If the difference between the two measurements exceeds the specified limit, replace the piston and the piston pin.

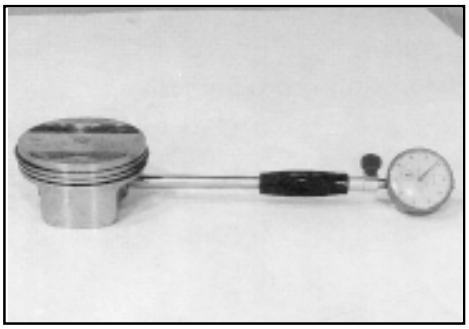

Service Limit

Piston pin bore I.D.: 22,030 mm (0.8672 in)

Specific tools: Comparator (1/1000 mm, 1 mm, 0.00004-0.03937 in)

Bore gauge (18-35 mm, 0.708-1.378 in)

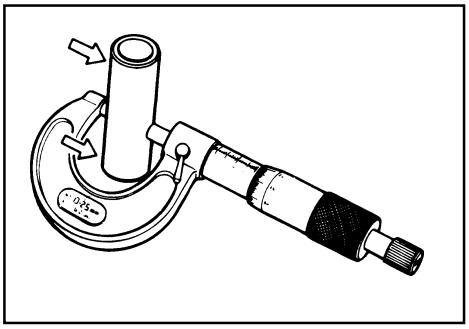

Using a micrometer, measure the outside diameter of the piston pin at three positions.

Service Limit

Piston pin O.D.: 21,980 mm (0.8665 in)

Specific tool: Micrometer (0-25 mm, 0-0.984 in)

Downloaded from www.Manualslib.com manuals search engine

INSTALLING THE PISTON AND THE CYLINDER

Install the piston rings in the following order: scraper, 2nd ring, 1st ring.

The sections of the 1st and 2nd rings differ in shape.

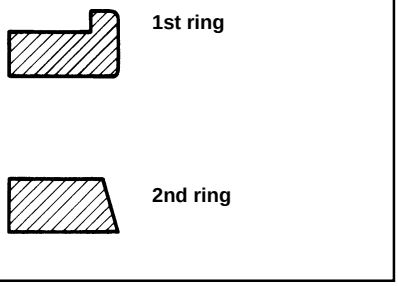

- Be sure to fit the 1st ring so that its convex side faces upwards.
- The 2nd ring is marked “RN” on one side. When fitting the ring on the piston, ensure that the marked side of the ring faces upwards.

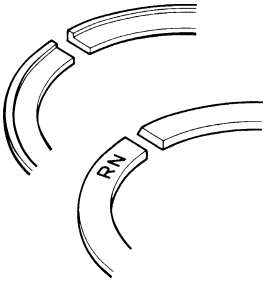

- The first element to be inserted into the scraper ring groove is spacer **1**. After positioning the spacer, fit the two side rings **2**. The spacer and the side rings do not have an upper or lower side and can be fitted either way.

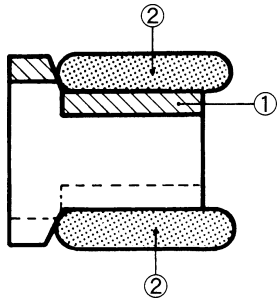

- Position the end gaps of the three piston rings as shown in the figure. Before inserting the pistons into the cylinders, ensure that the ring end gaps are positioned as indicated.

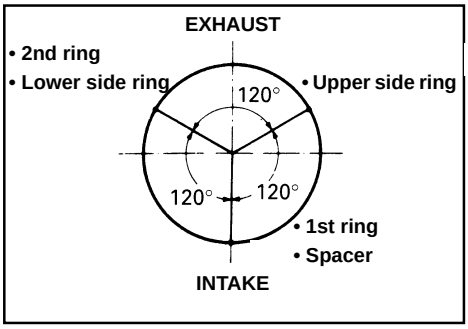

*When installing the pistons, ensure that triangle marks **A** on the piston heads face the exhaust side.*

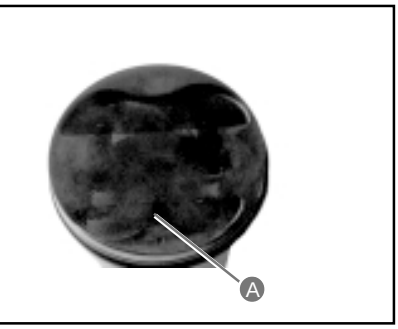

Downloaded from www.Manualslib.com manuals search engine

NO. 1 (FRONT) PISTON AND CYLINDER

Installation is obtained by following the removing procedure in reverse order.

Refer to the pages indicated for details on how to perform each step.

Fit:
- The piston pin.
- The piston.
- The oil jet.
- The dowel pins.
- The gasket (see pages D-61, D-62 and D-63).

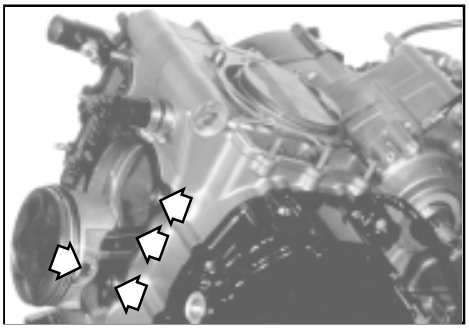

- The cylinder (see page D-62).

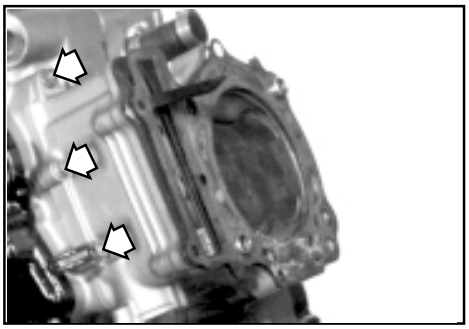

- The cylinder head (see page D-64).

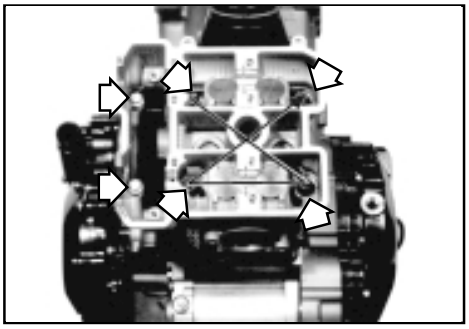

Downloaded from www.Manualslib.com manuals search engine

NO. 2 (REAR) PISTON AND CYLINDER

Installation is obtained by following the removing procedure in reverse order.

Refer to the pages indicated for details on how to perform each step.

Fit:
- The piston pin.
- The piston.
- The oil jet.
- The dowel pins.
- The gasket (see page D-59).

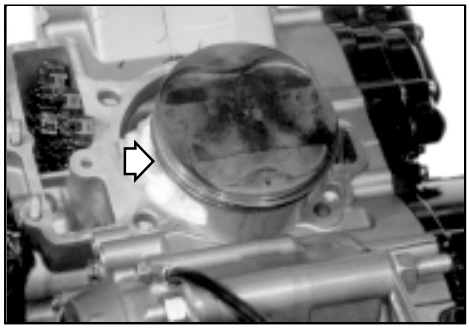

- The cylinder (see page D-62 and D-63).

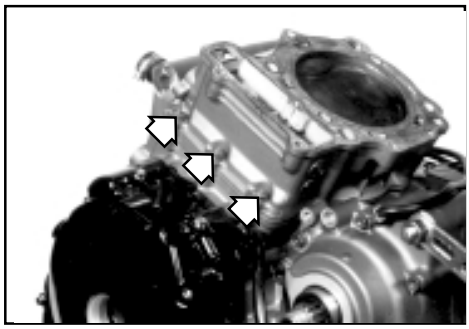

- The cylinder head (see page D-63).

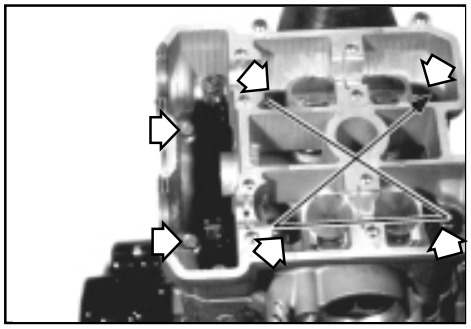

Downloaded from www.Manualslib.com manuals search engine

CLUTCH

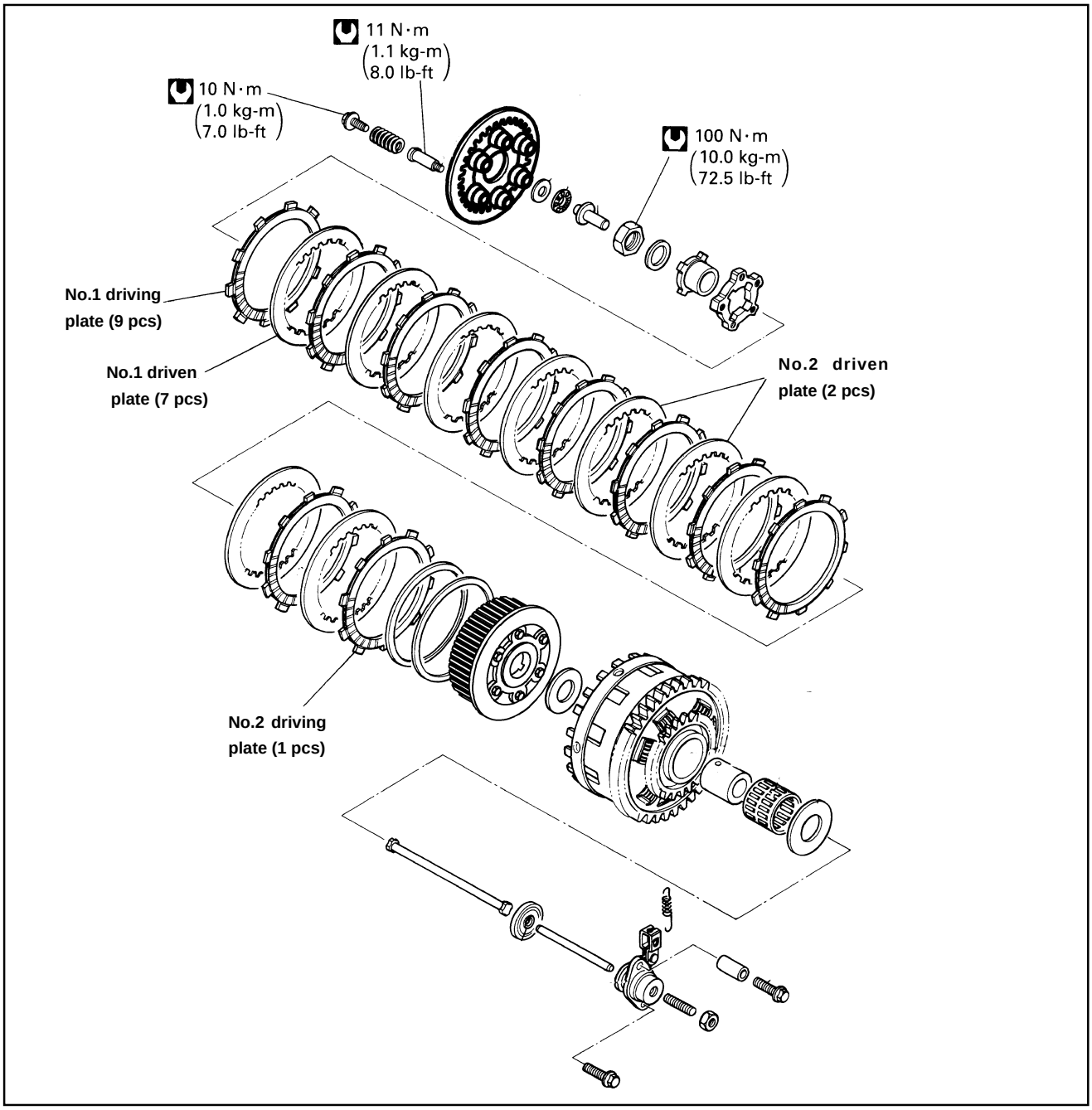

CONTENTS

REMOVING THE CLUTCH D-115
REMOVING THE CLUTCH THROW-OUT D-116
CHECKING THE CLUTCH AND THE THROW-OUT D-117
INSTALLING THE CLUTCH D-119
INSTALLING THE CLUTCH THROW-OUT D-122

Downloaded from www.Manualslib.com manuals search engine

REMOVING THE CLUTCH

After draining the engine oil, remove the following components in the order indicated.

Refer to the pages indicated for details on how to perform each step.

Drain:
- The engine oil.

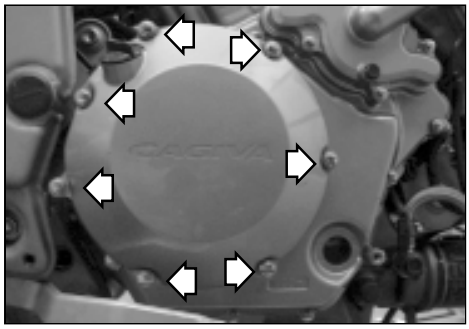

Remove:
- The clutch bell housing cover (see page D-29).

- The clutch springs.
- The pressure plate (see pages D-29 and D-30).

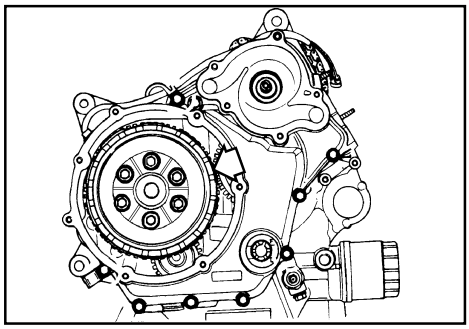

- The push rod.
- The bearing.
- The washer (see page D-30).

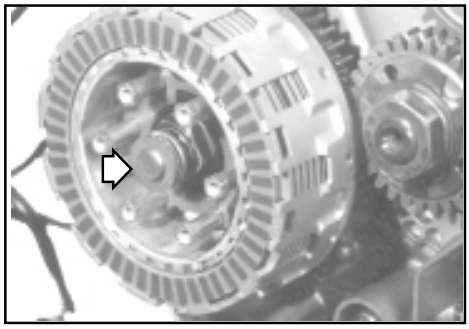

- The clutch push rod.
- The clutch plates.
- The spring washer.
- The spring washer seat (see page D-30).

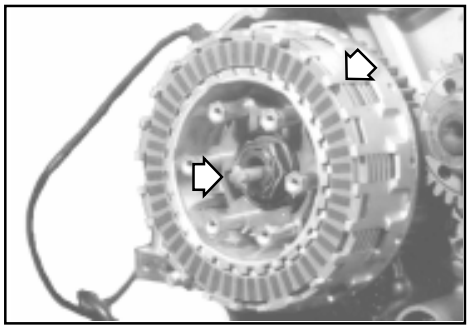

Downloaded from www.Manualslib.com manuals search engine

- The clutch drum.
- The clutch driving cam.
- The clutch driven cam (see pages D-30 and D-31).

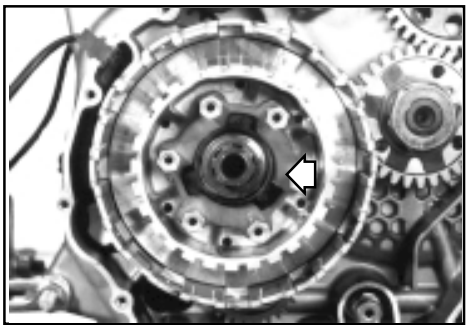

- The thrust washer.
- The primary driven gear assembly (see page D-37).

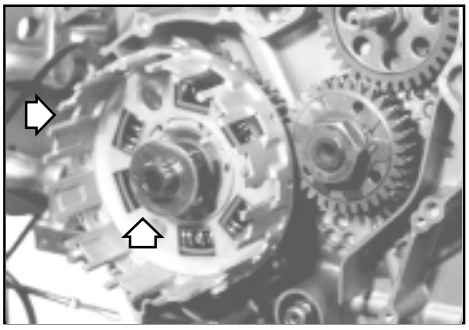

- The needle roller bearing.
- The collar.
- The thrust washer (see page D-32).

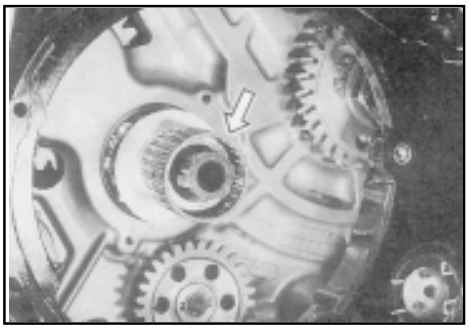

REMOVING THE CLUTCH THROW-OUT

Remove the throw-out components as described below.

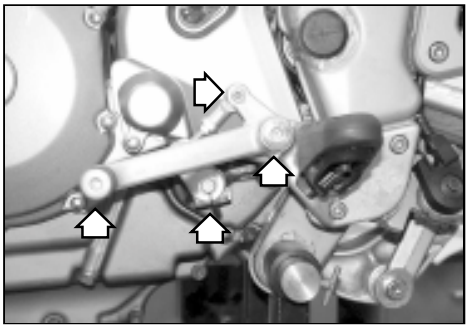

Refer to the pages indicated for details on how to perform each step.

Remove:

- The gearchange lever and the left hand footrest.
- The engine pinion cover (see pages D-7 and D-8).

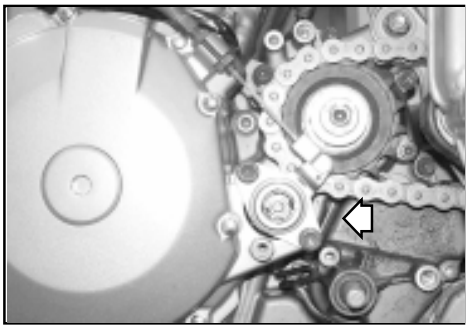

Downloaded from www.Manualslib.com manuals search engine

- The throw-out assembly (see page D-8.)

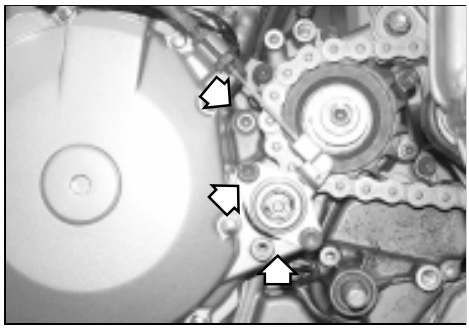

- The clutch push rod (see page D-8.)

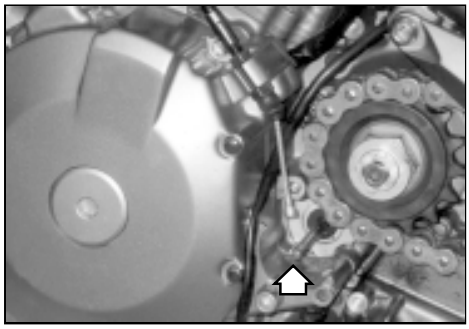

CHECKING THE CLUTCH AND THE THROW-OUT

CLUTCH DRIVING PLATES

Wipe the oil from the driving plates with a clean rag.

Measure the thickness of the clutch driving plates using a vernier caliper.
If any plate is out of specification, replace it with a new one.
Standard
Driving plate thickness (no. 1 and no. 2): 2,92-3,08 mm (0.1159-0.1212 in)

Specific tool: Vernier caliper

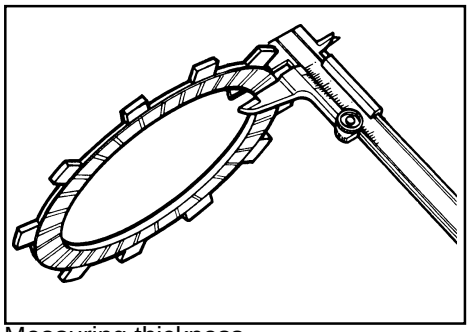
Measuring thickness

Measure the width of the driven plate teeth with a vernier caliper. If the teeth on a plate have worn down beyond the service limit, replace the plate.
Service limit
Driving plate tooth width (no. 1 and no. 2): 12,9 mm (0.5070 in)

Specific tool: Vernier caliper

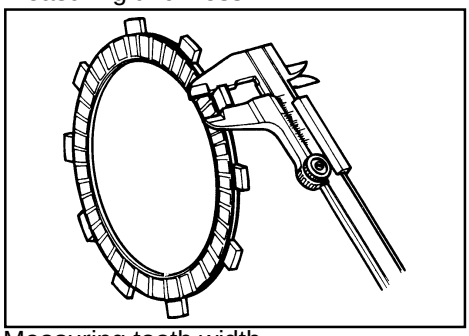
Measuring tooth width

Downloaded from www.Manualslib.com manuals search engine

CLUTCH DRIVEN PLATES

Wipe the oil from the driven plates with a clean rag.

Measure the distortion of the driven plates using a thickness gauge and a surface plate.
Replace any driven plates that are distorted beyond the specified limit.
Service limit
Driven plate distortion (no. 1 and no. 2): 0,1 mm (0.0039 in)

Specific tool: Thickness gauge

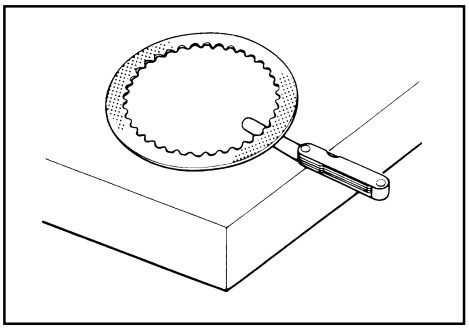
Measuring distortion

CLUTCH SPRING FREE LENGTH

Measure the free length of each clutch spring with a vernier caliper. Compare the strength of the spring with the specified limit. Replace all the springs if any one of them is out of specification.
Service limit
Clutch spring free length: 29,6 mm (1.1653 in)

Specific tool: Vernier caliper

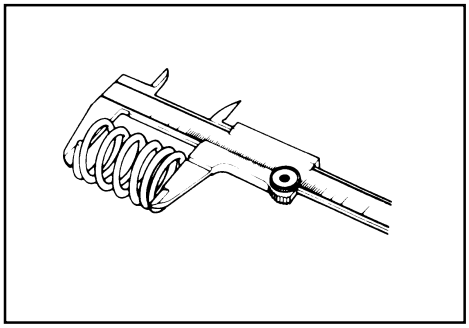

CLUTCH BEARING

Inspect the bearing of the clutch throw-out for any defects, and in particular cracks, to decide whether it can be reused or needs to be replaced.
Smooth engagement and disengagement of the clutch largely depend on the condition of this bearing.

The thrust washer is located between the pressure plate and the bearing.

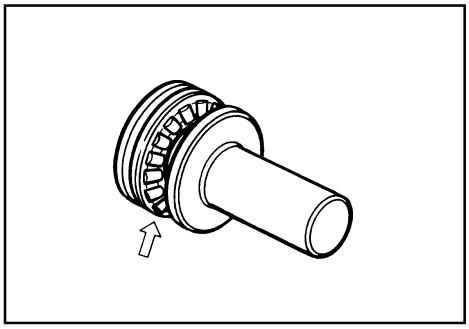

CLUTCH THROW-OUT

Before removing the throw-out assembly, manually operate the clutch lever to check if it moves freely without producing any abnormal noise. If the clutch lever is stiff, **apply grease or oil to the throw-out**.

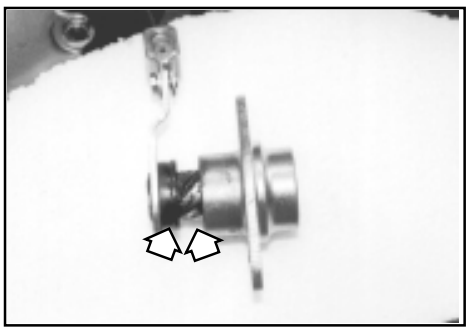

Downloaded from www.Manualslib.com manuals search engine

INSTALLING THE CLUTCH

To install the clutch, use the removing procedure in reverse order.

Refer to the pages indicated for details on how to perform each step.

Fit:

- The thrust washer.
- The collar.
- The needle roller bearing (see page D-52).



- The primary driven gear assembly.
- The thrust washer (see page D-52).

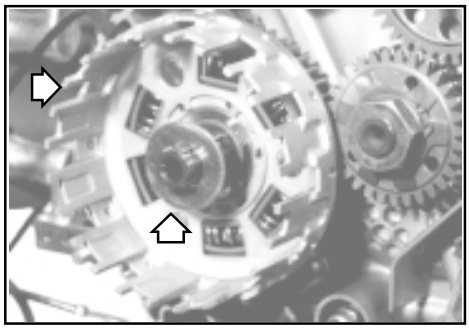

- The clutch driven cam.
- The clutch driving cam.
- The clutch drum (see pages D-51 and D-53).

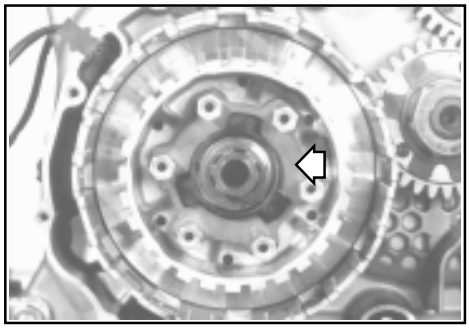

- Washer seat **1**.
- Spring washer **2** (see page D-54).

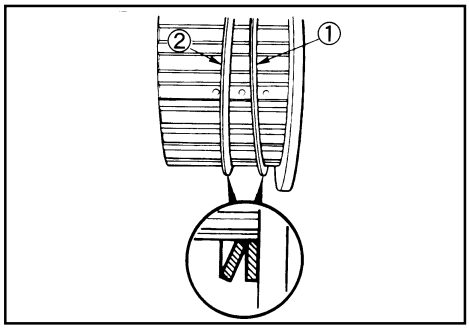

Downloaded from www.Manualslib.com manuals search engine

- The clutch plates.
- The clutch push rod (see pages D-54 and D-55).

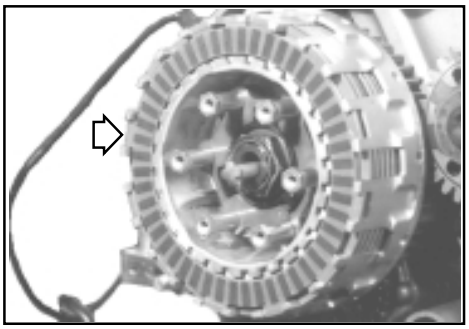

- The clutch push rod.
- The bearing.
- The washer (see page D-55).

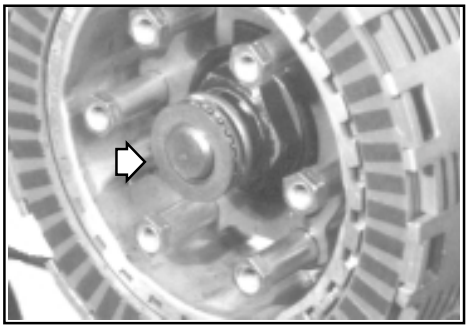

- The pressure plate.
- The clutch springs (see page D-55).

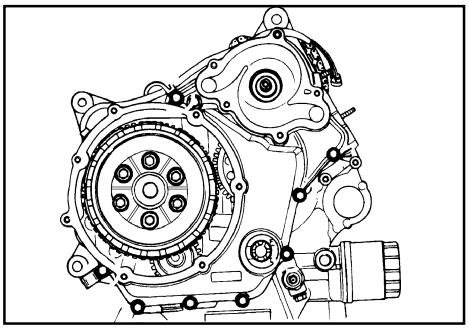

- The clutch bell housing cover (see page D-56).

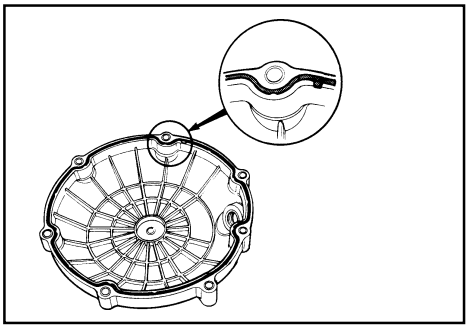

Adjust the following according to specifications:

	Page
* Engine oil	B-13
* Clutch lever play	B-15

Downloaded from www.Manualslib.com manuals search engine

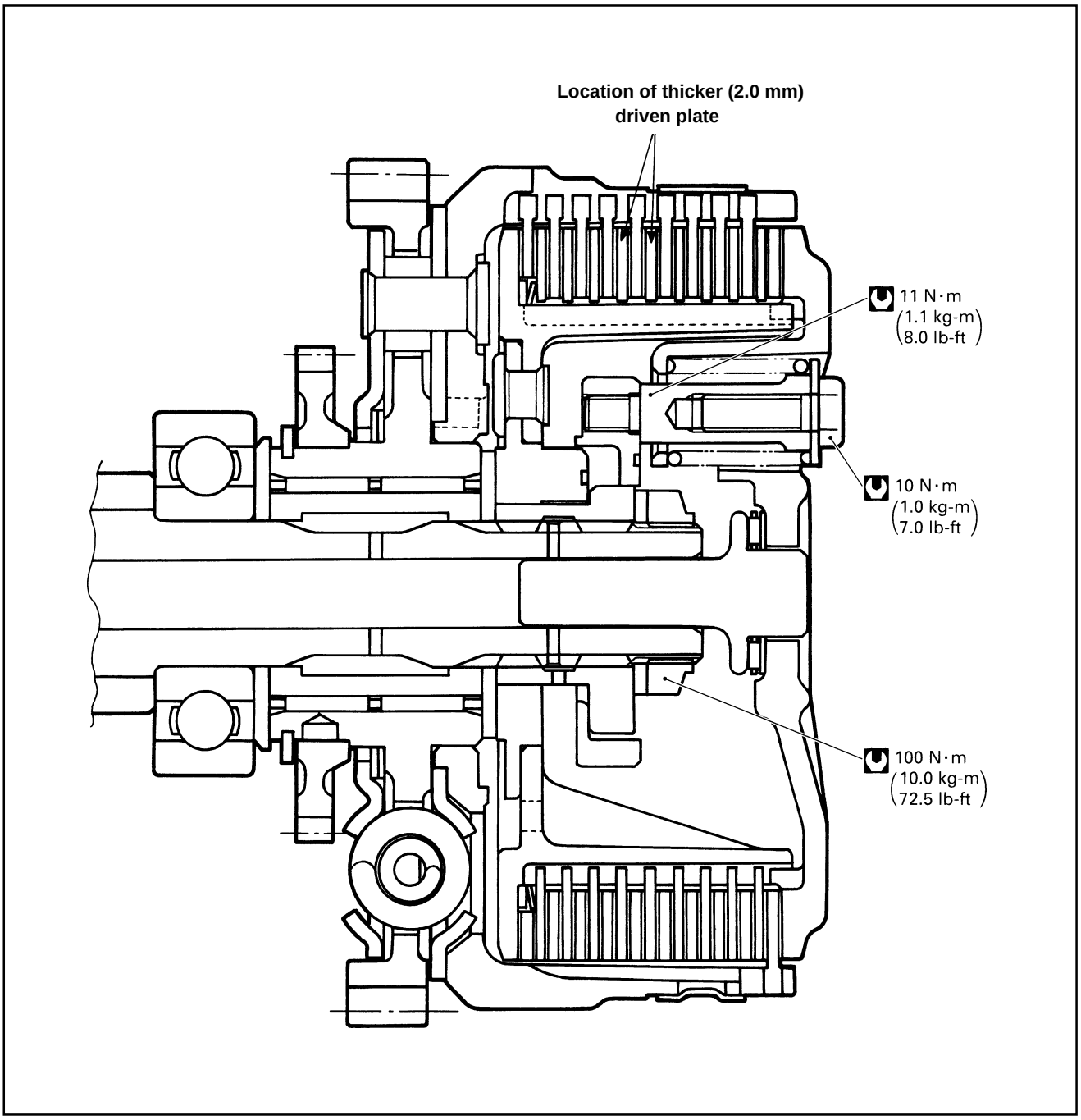

Downloaded from www.Manualslib.com manuals search engine

INSTALLING THE CLUTCH THROW-OUT

To fit the clutch throw-out, use the removing procedure in reverse order.

Refer to the pages indicated for details on how to perform each step.

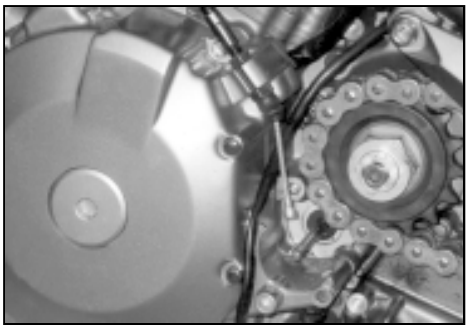

Fit:
- The clutch push rod (see page D-18).
- The throw-out assembly.

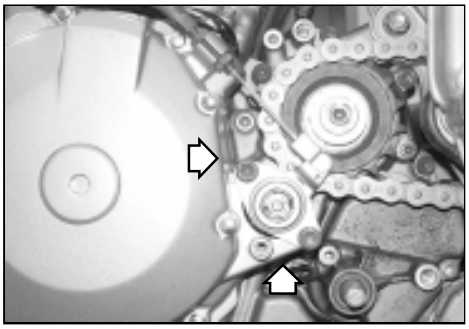

- The engine sprocket cover.
- The gearchange lever and the left hand footrest.

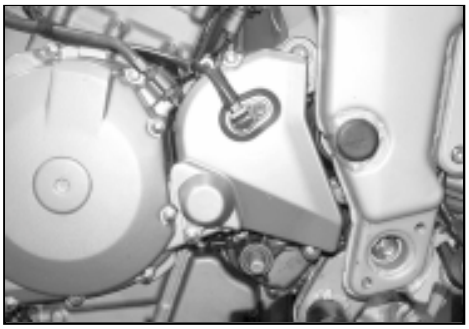

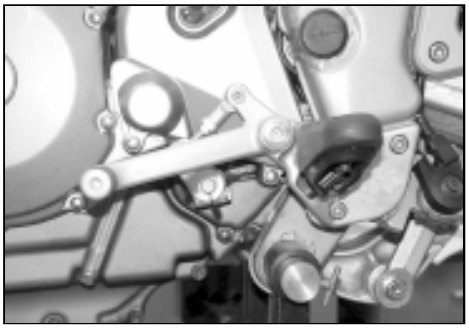

Adjust the following according to specifications:

	Page
* Clutch lever play	B-15

Downloaded from www.Manualslib.com manuals search engine

WATER PUMP/CLUTCH COVER

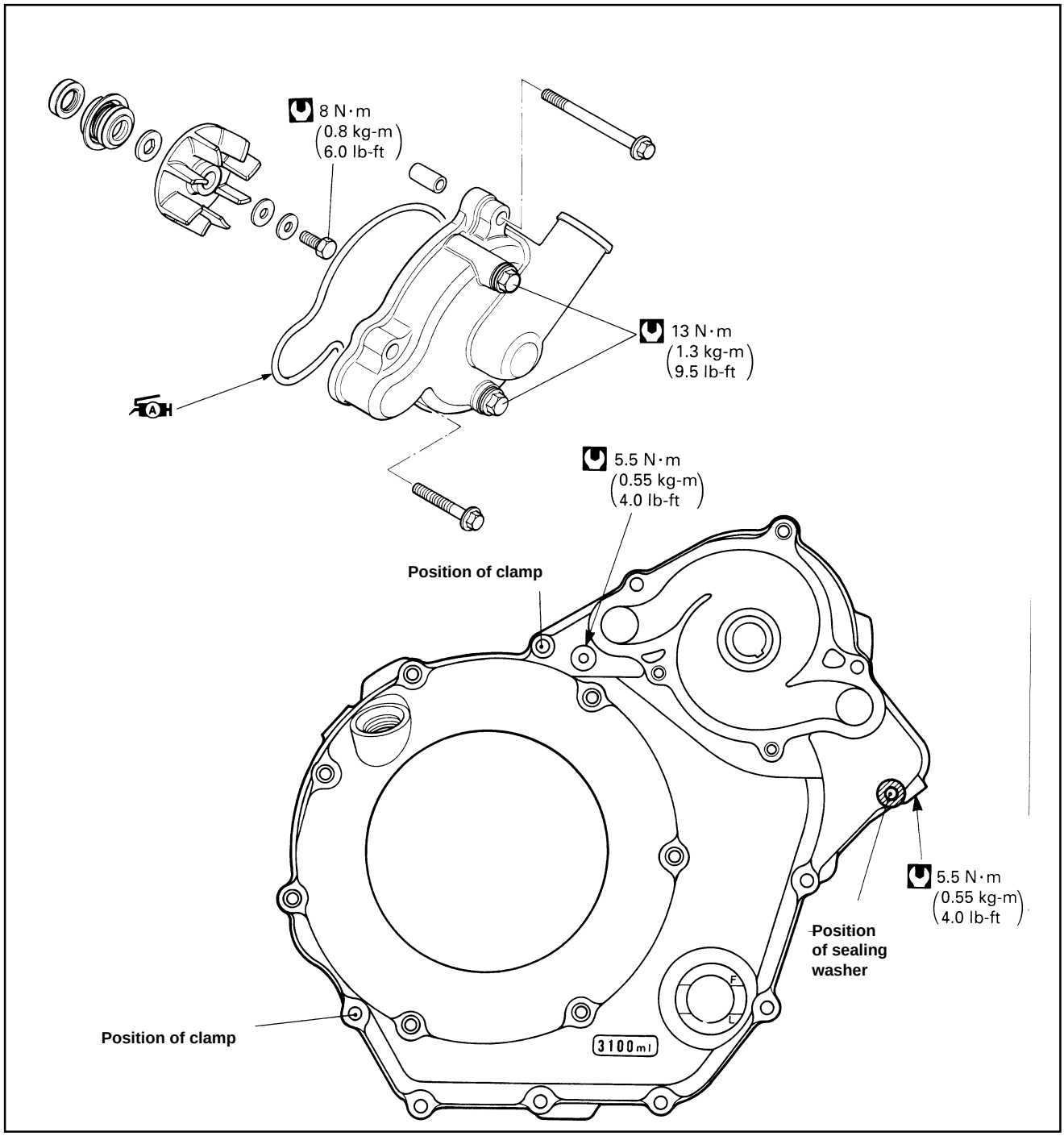

CONTENTS

REMOVING THE WATER PUMP AND THE CLUTCH COVER D-124
CHECKING AND SERVICING THE WATER PUMP AND THE CLUTCH COVER D-125
INSTALLING THE WATER PUMP AND THE CLUTCH COVER D-127

Downloaded from www.Manualslib.com manuals search engine

REMOVING THE WATER PUMP AND THE CLUTCH COVER

After draining the engine oil and the coolant, remove the parts listed below in the order indicated.

- This operation must be carried out with the engine installed in the frame.

Refer to the pages indicated for details on how to perform each step.

Drain:
- The engine oil (see page B-16.)
- The engine coolant (see pages B-19 and B-20.)
- Remove the sump guard (see page B-7)

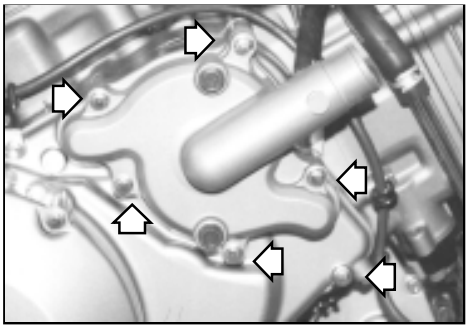

Remove:
- The hose mounted directly on the pump housing cover.
- The water pump casing (see page D-29).

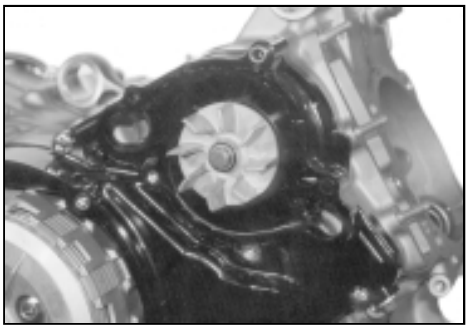

- The dowel pin.
- The impeller (see page D-29).

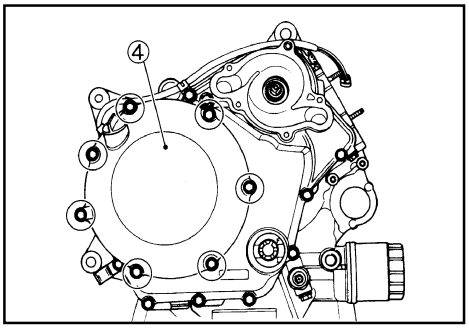

- Clutch cover **4** (see page D-29).

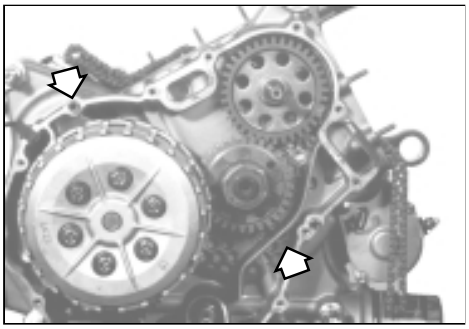

- The dowel pin.
- The gasket.

Downloaded from www.Manualslib.com manuals search engine

CHECKING AND SERVICING THE WATER PUMP AND THE CLUTCH COVER

CHECKING THE MECHANICAL SEAL AND THE SEALING WASHER

Before removing the water pump and draining the coolant, check for coolant leakages from the clutch cover drain hole. If coolant is leaking, remove the clutch cover and visually inspect the mechanical seal and the oil seal for damage.

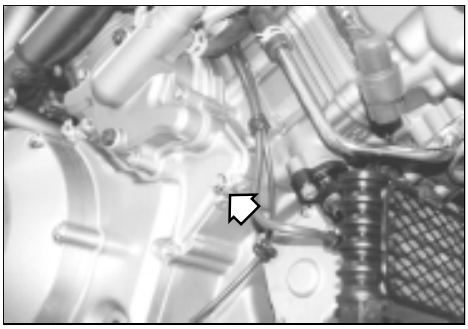

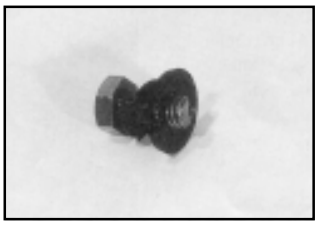

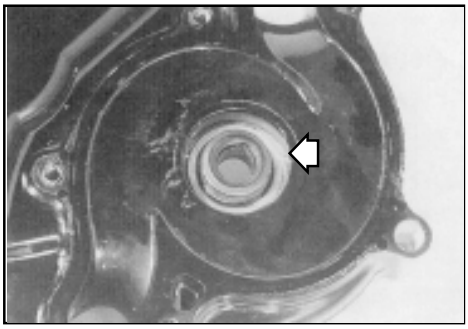

CHECKING THE OIL SEAL

Before removing the clutch cover and draining the engine oil, check for leakages of engine oil from the clutch cover drain hole. If there is an oil leak, remove the clutch cover and visually check the oil seal lip for damage.

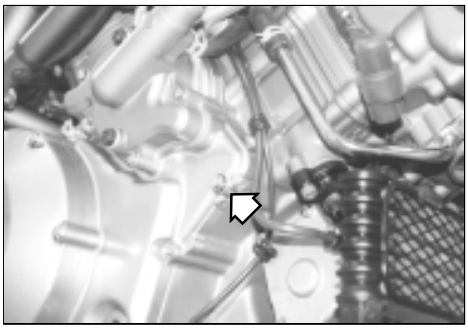

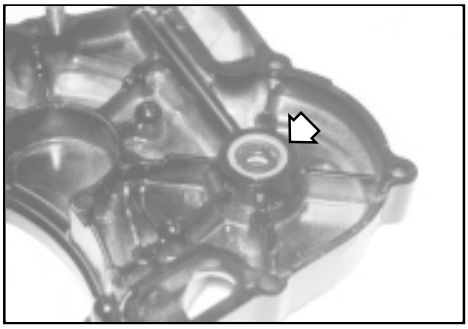

REMOVING THE OIL SEAL AND THE MECHANICAL SEAL

- Remove oil seal **1** from the clutch cover with a screwdriver or a similar tool.

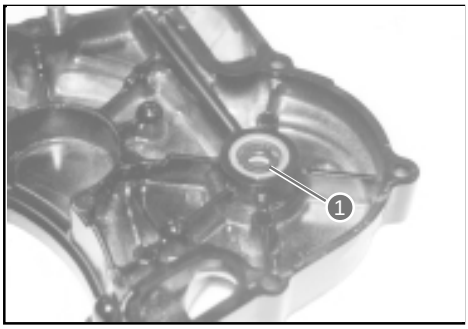

Replace the removed oil seal with a new one.

Downloaded from www.Manualslib.com manuals search engine

- Remove the mechanical seal using a tubular spanner or a similar tool.

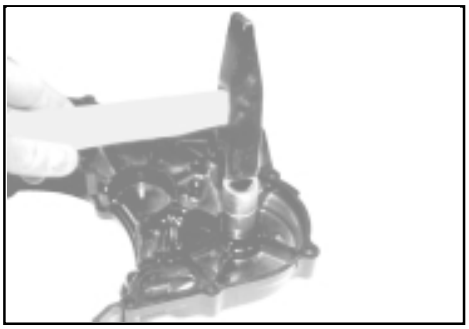

Replace the removed mechanical seal with a new one.

If no coolant or oil leakage from the drain hole is found, there is no need to remove the mechanical seal and the oil seal.

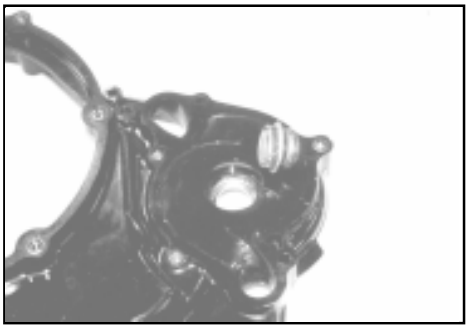

INSTALLING THE OIL SEAL AND THE MECHANICAL SEAL

- Using a suitable tool, fit a new mechanical seal in the clutch cover.

When installing the mechanical seal, apply LOCTITE to its outer surface.

Specific product: RHODORSEAL 5552

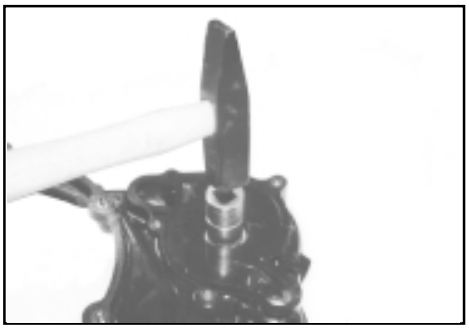

- Fit a new oil seal into the clutch cover using a suitable tool.

*Outer side **A** of the oil seal must face the clutch cover side.*

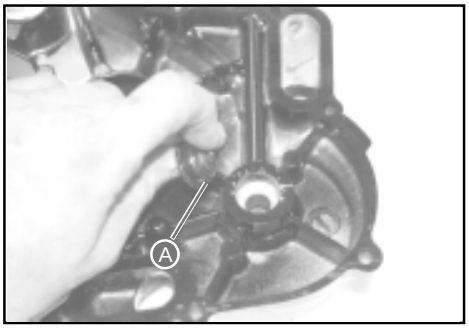

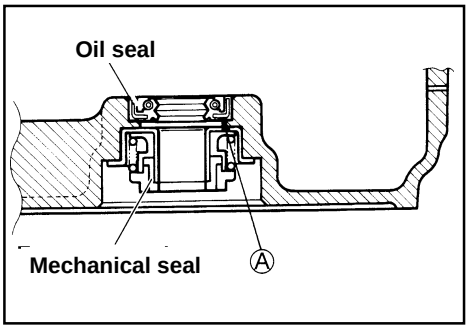

Downloaded from www.Manualslib.com manuals search engine

INSTALLING THE WATER PUMP AND THE CLUTCH COVER

Installation is obtained by following the removing procedure in reverse order.

Refer to the pages indicated for details on how to perform each step.

Fit:
- The gasket.
- The dowel pin (see page D-55).

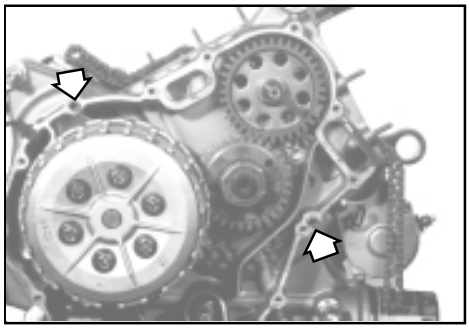

- Clutch cover 4 (see pages D-55 and D-56).

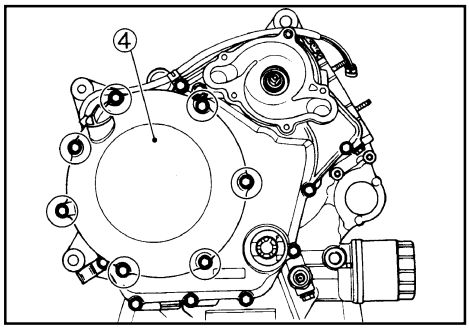

- The impeller (see page D-56).

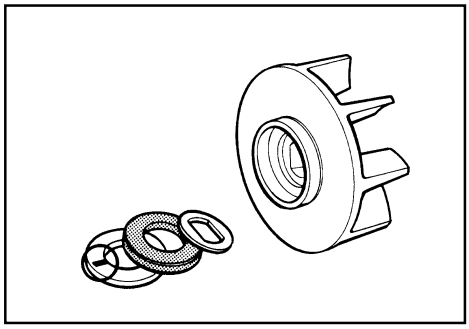

- The impeller fastening bolt (see page D-57).
- The dowel pin.

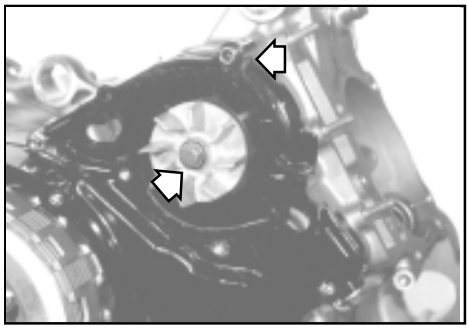

Downloaded from www.Manualslib.com manuals search engine

- The water pump casing (see pages D-57 and D-58).
- The water hose.

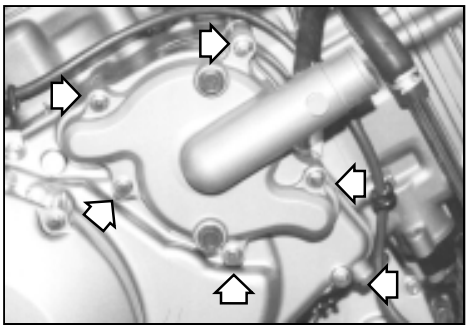

Adjust the following according to specifications:

Page
* Engine coolant B-19
* Engine oil B-16

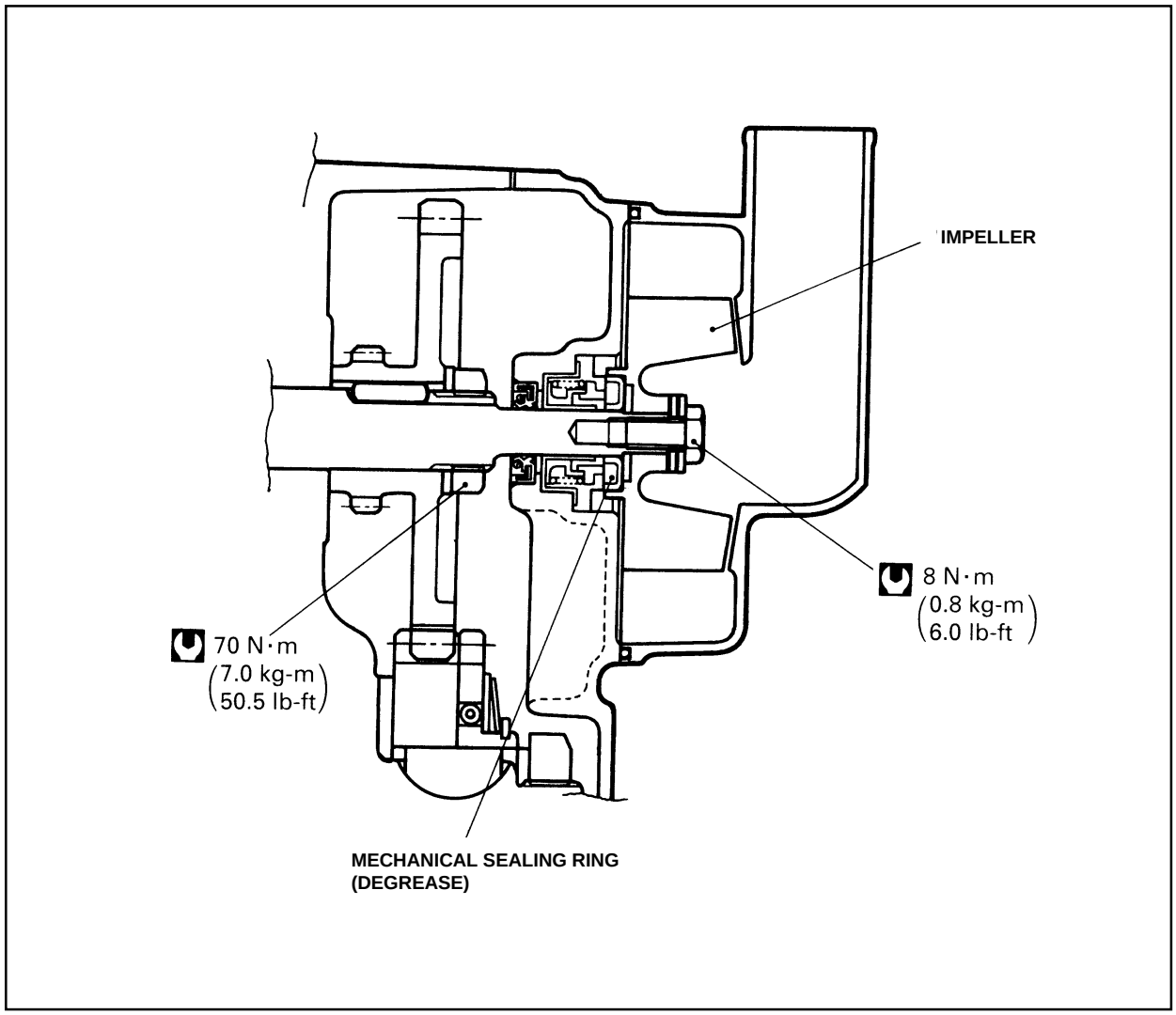

Downloaded from www.Manualslib.com manuals search engine

PRIMARY DRIVING GEAR/NO. 1 VALVE MOTION IDLER GEAR/ SPROCKET SHAFT

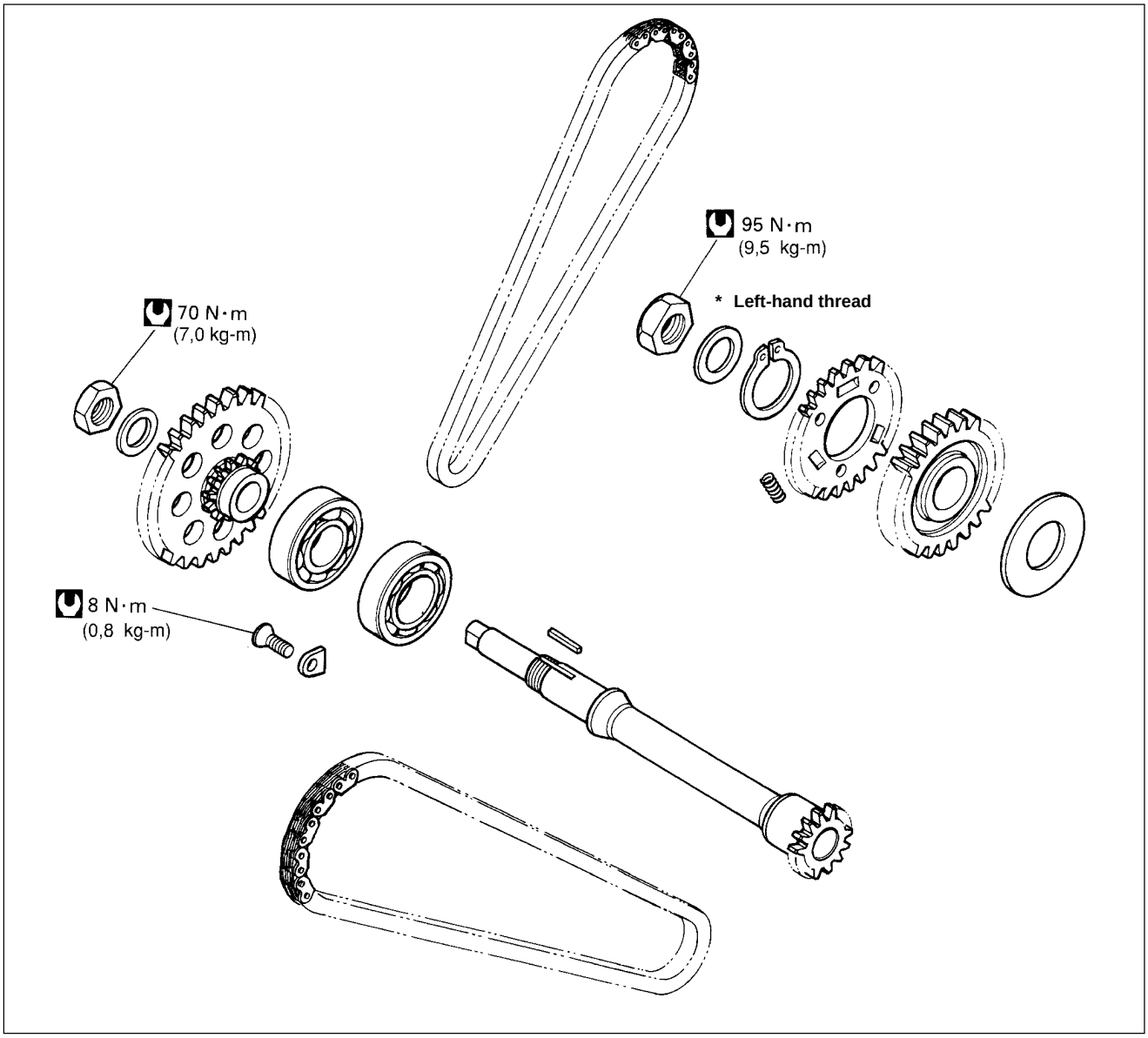

CONTENTS

REMOVING THE PRIMARY DRIVING GEAR AND THE NO. 1 VALVE MOTION IDLER GEAR/SPROCKET SHAFT D-130

CHECKING THE PRIMARY DRIVING GEAR/NO. 1 VALVE MOTION SPROCKET AND THE PRIMARY DRIVING GEAR/NO. 1 VALVE MOTION IDLER GEAR/SPROCKET SHAFT D-132

CHECKING AND SERVICING THE PRIMARY DRIVING GEAR D-132

FITTING THE PRIMARY DRIVING GEAR AND THE NO. 1 VALVE MOTION IDLER GEAR/SPROCKET SHAFT D-133

Downloaded from www.Manualslib.com manuals search engine

REMOVING THE PRIMARY DRIVING GEAR AND THE NO. 1 VALVE MOTION IDLER GEAR/ SPROCKET SHAFT

The above items can be removed while supporting the engine assembly with a suitable jack. For further details, refer to the section on engine removal.

ENGINE REMOVAL ..... see pages D-4 to D-12.

To remove the primary driving gear, the no. 1 valve motion idler gear/sprocket and the no. 1 valve motion idler gear/sprocket shaft, remove the items listed below in the order indicated.

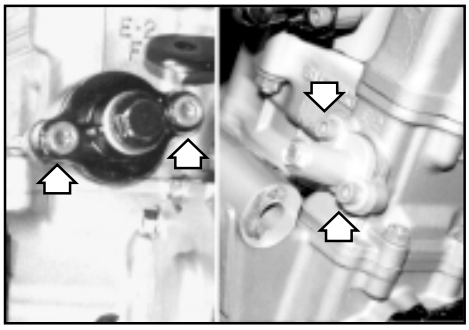

Refer to the pages indicated for details on how to perform each step.

Remove:

- The camshafts.
- The timing chain tension adjusters.
- The no. 2 valve motion idler gears/sprockets (see page D-88).

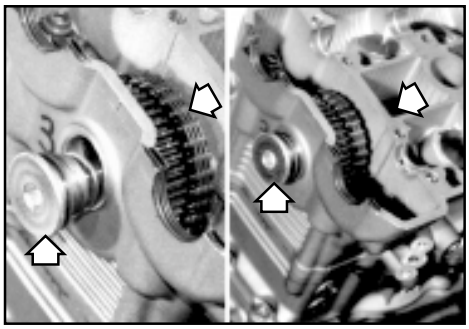

The following parts can be removed without removing the cylinder heads and the cylinders:

- The water pump.
- The clutch cover (see page D-29).

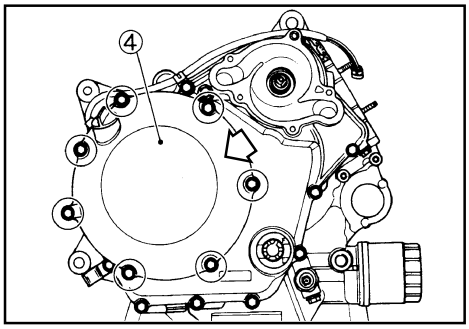

- The clutch assembly (see pages D-29 to D-32).

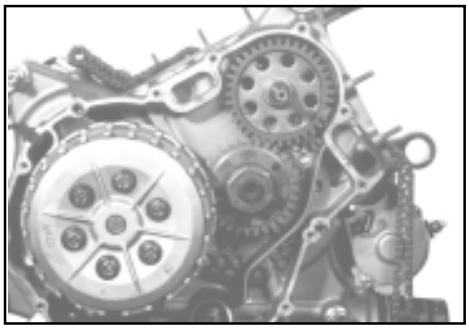

Downloaded from www.Manualslib.com manuals search engine

- The generator cover (see page D-28).

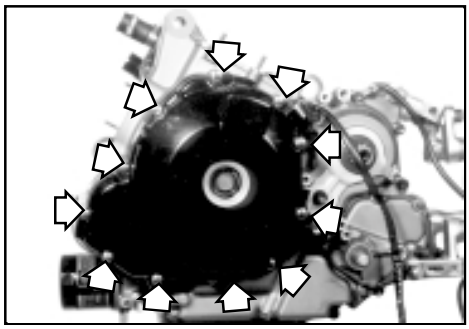

- The no. 1 valve motion idler gear/sprocket.
- The timing chain (see page D-33).

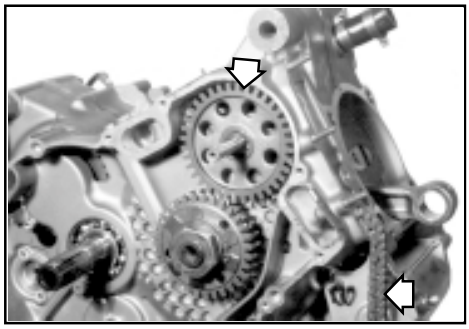

- The primary driving gear (see page D-34).

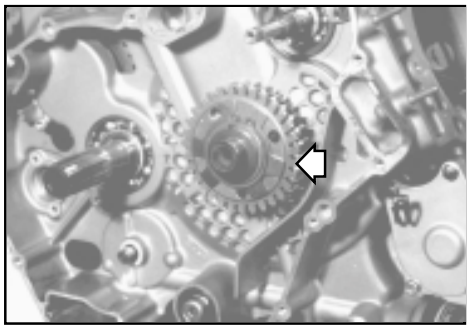

- The generator rotor (see pages D-34 and D-35).

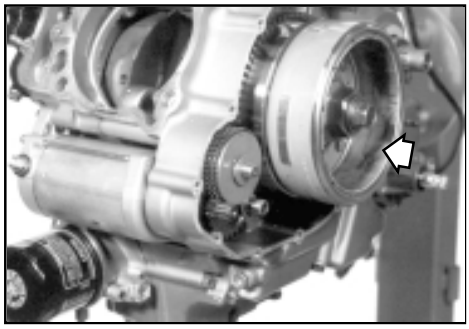

- The no. 1 valve motion idler gear/sprocket shaft.
- The timing chain (see page D-35).

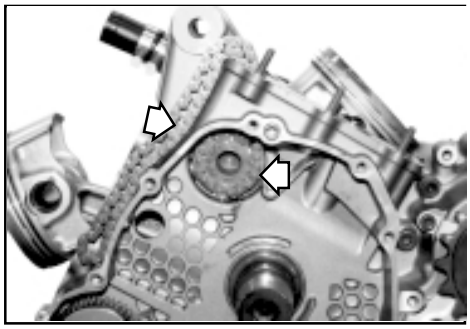

Downloaded from www.Manualslib.com manuals search engine

CHECKING THE PRIMARY DRIVING GEAR/NO. 1 VALVE MOTION SPROCKET AND THE PRIMARY DRIVING GEAR/NO. 1 VALVE MOTION IDLER GEAR/SPROCKET SHAFT

CHECK

Visually check the wear of the gear and sprocket teeth. If the teeth are worn, replace the gear and the sprocket with new parts.

CHECKING AND SERVICING THE PRIMARY DRIVING GEAR

CHECKING THE PRIMARY DRIVING GEAR

Visually check the wear of the gear teeth. If the teeth are worn, replace the gear.

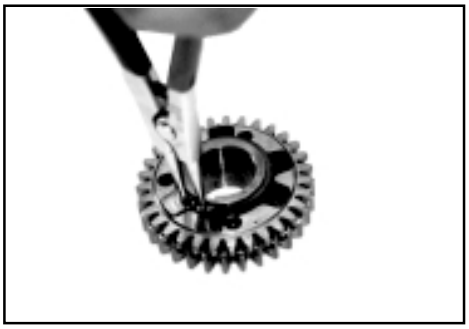

DISASSEMBLING THE PRIMARY DRIVING GEAR

- Remove the circlip and disassemble the primary driving gear.

Specific tool: 800096765: Snap ring pliers

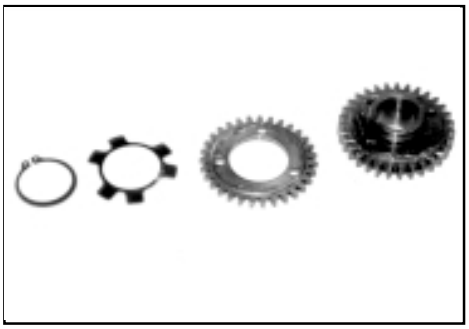

ASSEMBLING THE PRIMARY DRIVING GEAR

- Fit the springs between the gears as shown in the figure.

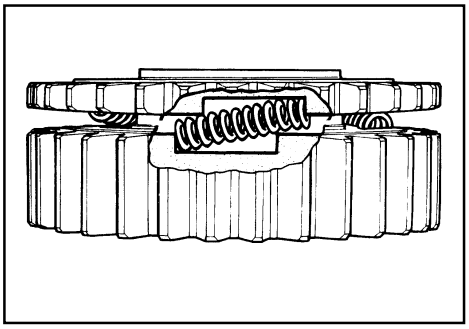



- Fully insert gear **1** while turning it clockwise.

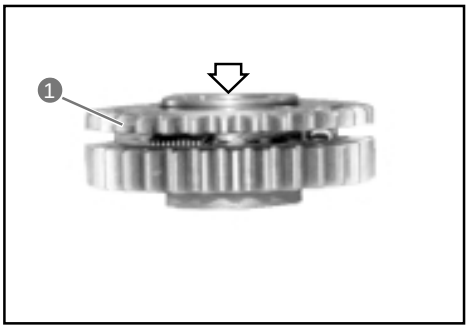

Downloaded from www.Manualslib.com manuals search engine

- Carefully fit the circlip with the specially designed pliers.

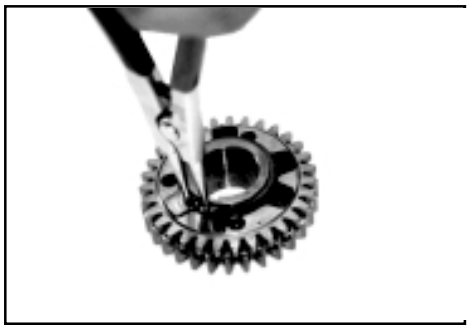

Specific tool: 800096765 - Snap ring pliers

*** Never reuse a removed circlip. After removing the circlip from the gear, discard it and fit a new circlip.**
*** When fitting a new circlip, take care not to part its ends more than is required to fit it on the gear.**
*** After fitting a circlip, always check that it is fully and securely seated in its groove.**

FITTING THE PRIMARY DRIVING GEAR AND THE NO. 1 VALVE MOTION IDLER GEAR/ SPROCKET SHAFT

Refer to the sections on engine assembly and installation for information on how to fit the primary driving gear, the no. 1 valve motion idler gear/sprocket, and the no. 1 valve motion idler gear/sprocket shaft.

ENGINE ASSEMBLY
..... Refer to pages D-40 -80

ENGINE INSTALLATION
..... Refer to pages D-13 -19

After installing the power plant, adjust the following according to specifications:

Page
* Engine coolant B-19
* Engine oil B-16
* Throttle cable play B-18
* Throttle timing C-61/C-71
* Idle speed tuning up B-17
* Clutch lever play B-19
* Drive chain slack B-21

Downloaded from www.Manualslib.com manuals search engine

STARTING SYSTEM/GENERATOR/CRANKSHAFT POSITION SENSOR

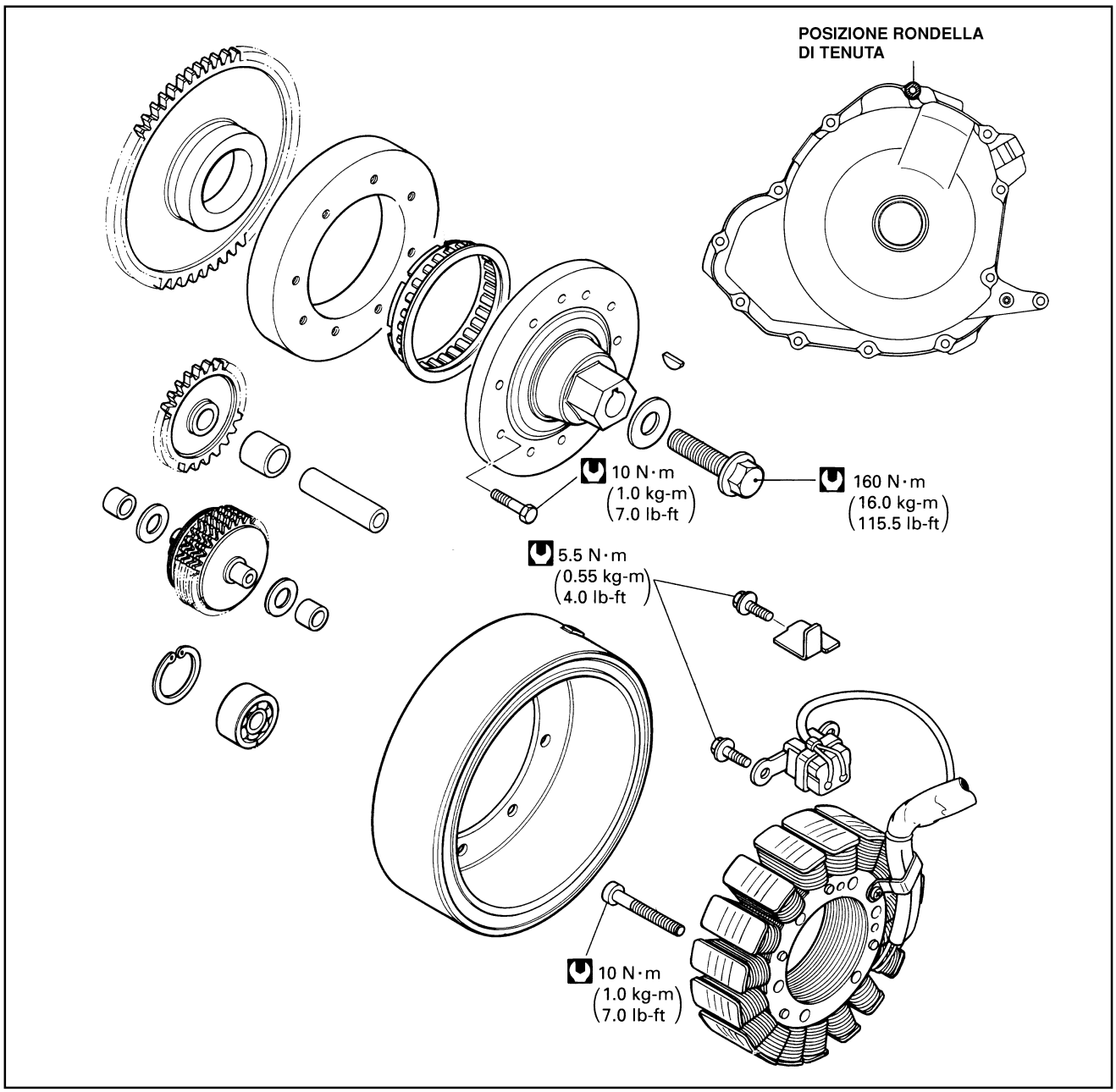

CONTENTS

REMOVING THE STARTING TORQUE LIMITER, THE GENERATOR AND THE CRANKSHAFT POSITION SENSOR D-135
CHECKING AND SERVICING THE STARTING TORQUE LIMITER, THE GENERATOR AND THE CRANKSHAFT POSITION SENSOR D-137
INSTALLING THE STARTING TORQUE LIMITER, THE GENERATOR AND THE CRANKSHAFT POSITION SENSOR D-140
REMOVING THE STARTER MOTOR D-142
CHECKING AND SERVICING THE STARTER MOTOR D-142
INSTALLING THE STARTER MOTOR D-142

Downloaded from www.Manualslib.com manuals search engine

REMOVING THE STARTING TORQUE LIMITER, THE GENERATOR AND THE CRANKSHAFT POSITION SENSOR

The following components must be removed in the order indicated so that the starter torque limiter, the generator and the crankshaft position sensor can be removed.

- This operation can be carried out without removing the engine.

Refer to the pages indicated for details on how to perform each step.

After draining the engine oil:

- Remove the sump guard (see page B-7)
- Remove the left hand footrest complete with the gearchange lever assembly (see page D-7)
- Unscrew the two screws as shown in the figure and remove the silencer protection.
- Remove the pinion cover by unscrewing the three fixing screws. Be careful of the centring pins.



- The clutch throw-out assembly.
- The clutch cable (see page B-16).
- The generator wire.
- The crankshaft position sensor wire.

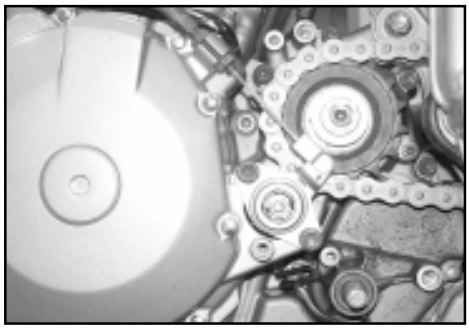

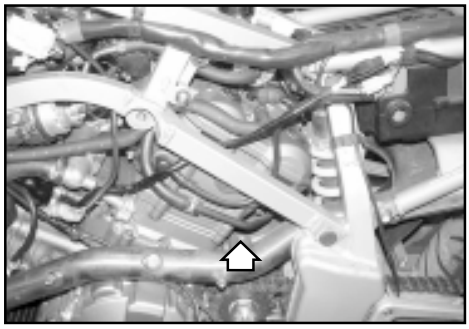

- The generator cover (see page D-28).

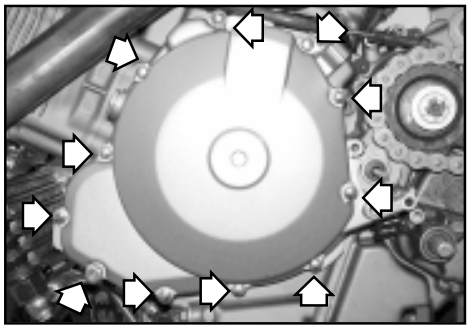

Downloaded from www.Manualslib.com manuals search engine

- The dowel pin.
- The gasket (see page D-28).

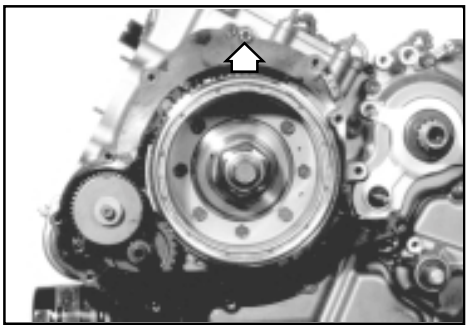

- The starting torque limiter (see page D-28).

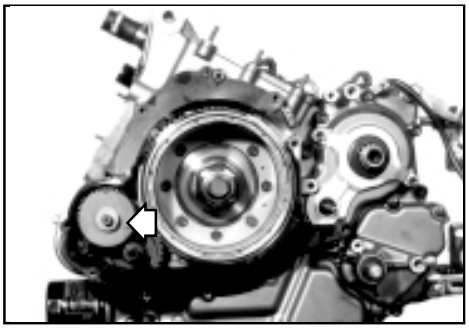

- The starting idler gear.
- The shaft.
- The spacer.
- The bushings (see page D-28).

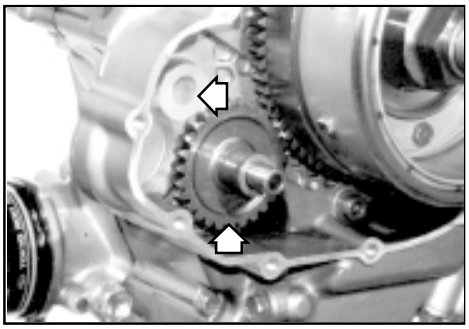

- The generator rotor assembly (see pages D-34 and D-35).

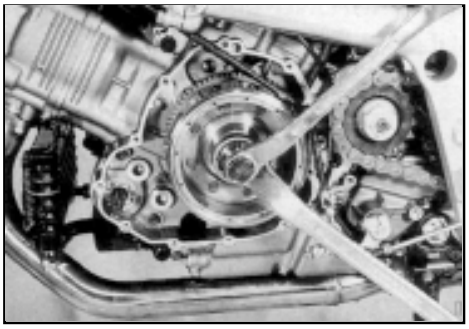

- The starting driven gear (see page D-35).

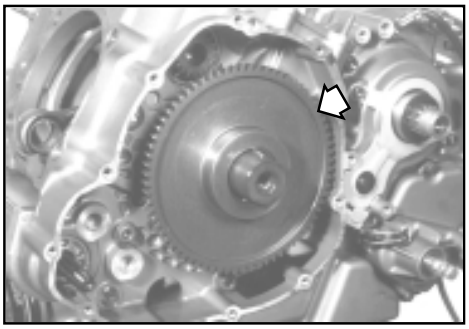

Downloaded from www.Manualslib.com manuals search engine

CHECKING AND SERVICING THE STARTING TORQUE LIMITER, THE GENERATOR AND THE CRANKSHAFT POSITION SENSOR

CHECKING THE STARTING TORQUE LIMITER

Do not attempt to disassemble the starting torque limiter. The starting torque limiter is only available as an assembly.

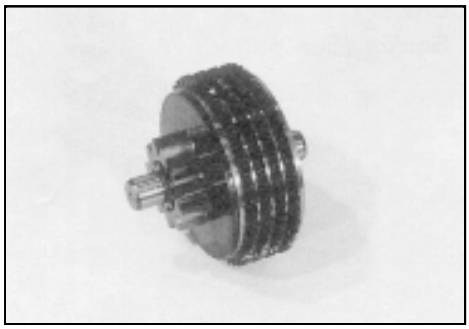

- Check the slipping torque with the specially designed tools.

Specific tools:
800096685 - Starting torque limiter holder 1
800096686 - Starting torque limiter connection 2

Standard
Slipping torque: 42-64 N·m (4,2-6,4 kg-m) (30.66 lb·ft)

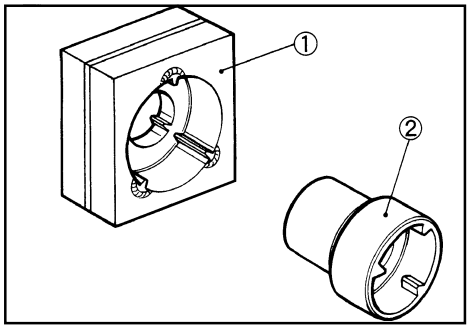

- Place the torque limiter in a vice and attach the special tools as shown in the figure.
- If the slipping torque is not as specified, replace the starting torque limiter with a new one.

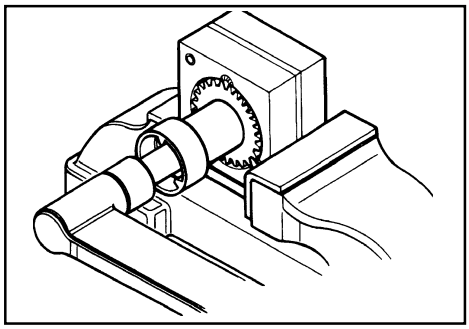

CHECKING THE STARTING TORQUE LIMITER SHAFT BUSHINGS

- Check the bushings for wear and damage. If any defects are found, replace the bushings with new ones.

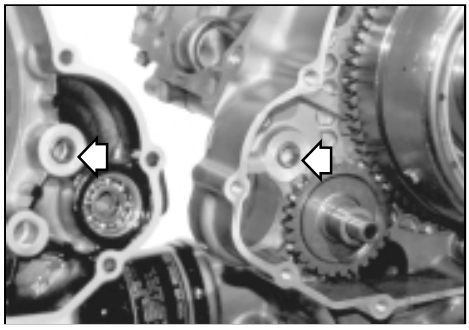

CHECKING THE STARTER MOTOR SHAFT BEARING

- Check the bearing for abnormal noise and uneven rotation. If any defects are found, replace the bearing with a new one using the specially designed tool.

Special tool: 800096766 - Snap ring pliers

After fitting the circlip, ensure that it is fully and securely seated in its groove.

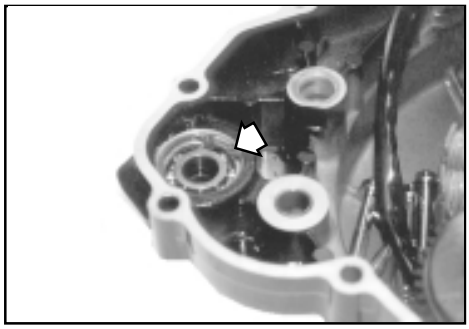

Downloaded from www.Manualslib.com manuals search engine

CHECKING THE GENERATOR STATOR AND THE CRANKSHAFT POSITION SENSOR

Refer to section G.

SERVICING THE GENERATOR STATOR AND THE CRANKSHAFT POSITION SENSOR

When replacing the generator stator or the crankshaft position sensor, apply specific product to generator stator fastening bolts **1**, clamp bolt **2** and crankshaft position sensor fastening bolt **3**, and then tighten with the specified torque.

Specific product: LOC-TITE 243

Tightening torques:
Generator stator fastening bolt 1 10 N·m (1,0 kg-m) (7.3 lb·ft)
Generator stator clamp bolt 2 5.5 N·m (0,55 kg-m) (3.96 lb·ft)
Crankshaft position sensor fastening bolt 3
5.5 N·m (0,55 kg-m) (3.96 lb·ft)

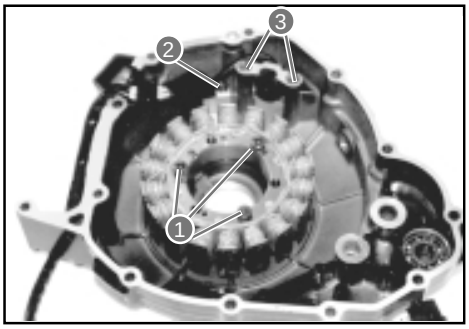

CHECKING THE STARTER COUPLING

Fit the starting driven gear on the starter coupling and turn the driven gear manually to ensure that the coupling moves freely. The gear turns in one direction only. If strong resistance opposes rotation, check the starter coupling and the contact area between the coupling and the driven gear for wear or damage. If any damage is found, replace the damaged parts with new ones.

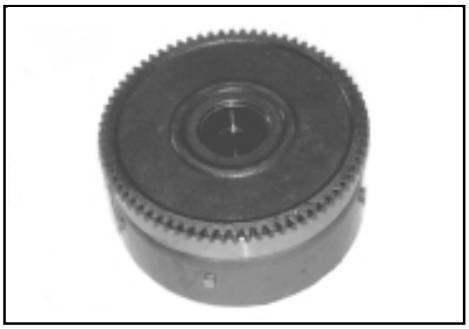

CHECKING THE STARTING DRIVEN GEAR BEARING

Check the starting driven gear bearing for damage.

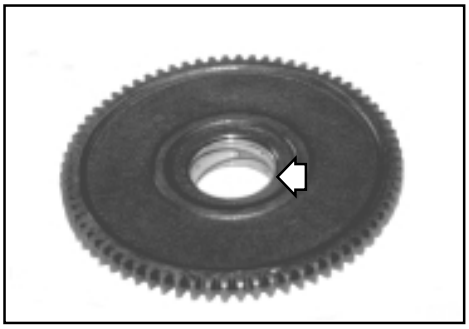

SERVICING THE STARTER COUPLING

- Remove the starter coupling fastening bolts.
- Remove one-way coupling **4**, guide **5** and starter coupling housing **6** from generator rotor **7**.

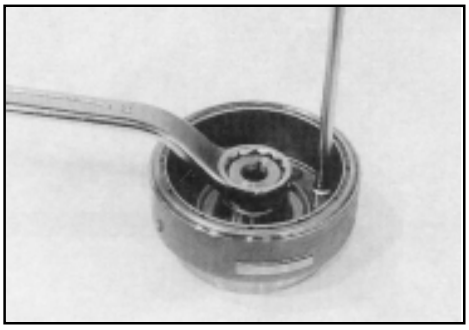

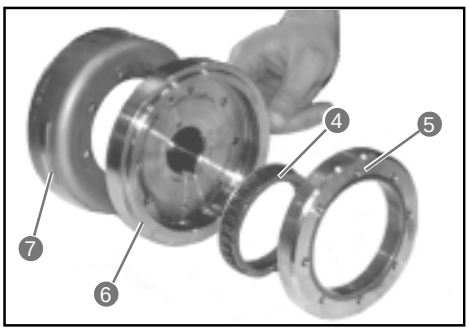

Downloaded from www.Manualslib.com manuals search engine

- When fitting one-way coupling **2** into guide **1**, position one-way coupling flanged side **A** so that it faces starter coupling housing **3**.

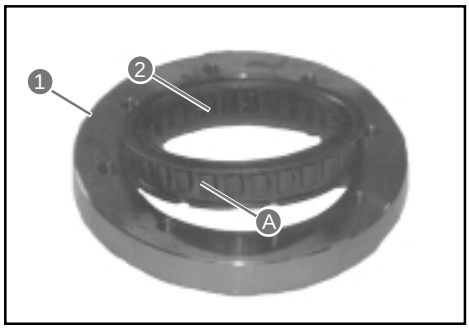



- When fitting starter coupling housing **3** on the generator rotor, align hole **B** in the starter coupling housing with projection **C** on the generator rotor.

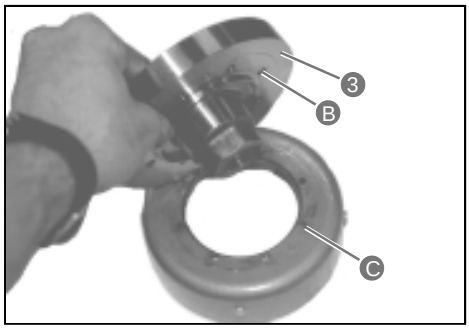

- Apply specific product to the bolts and tighten them with the prescribed torque.

Specific product: LOC-TITE 270

Tightening torque:
Starter coupling bolt **10 N·m (1,0 kg-m) (7.3 lb·ft)**

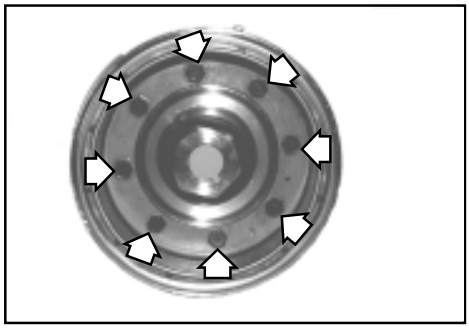

Downloaded from www.Manualslib.com manuals search engine

INSTALLING THE STARTING TORQUE LIMITER, THE GENERATOR AND THE CRANKSHAFT POSITION SENSOR

Installation is obtained by following the removing procedure in reverse order.

Refer to the pages indicated for details on how to perform each step.

Fit:
- The starting driven gear.
- The generator rotor assembly (see pages D-47 and D-48).

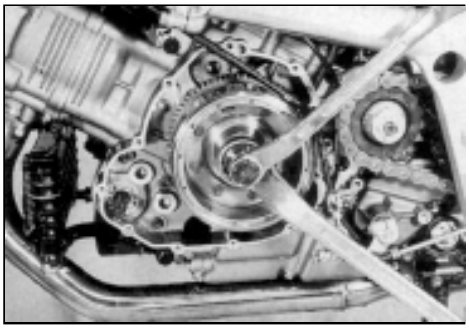

- The starting idler gear.
- The shaft.
- The spacer (see page D-58).

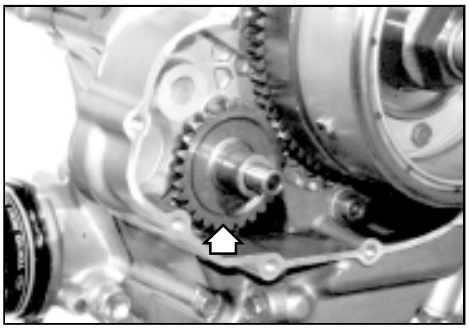

- The bushings (see page D-58).

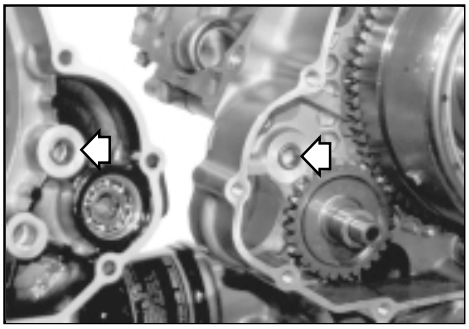

- The starting torque limiter (see page D-58).

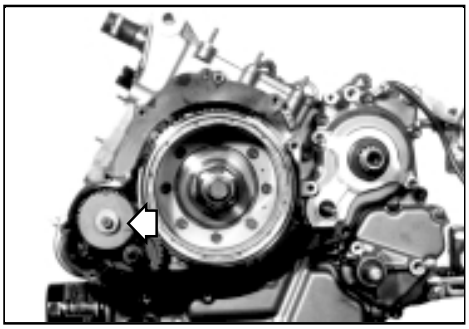

Downloaded from www.Manualslib.com manuals search engine

- The gasket.
- The dowel pin (see page D-58).

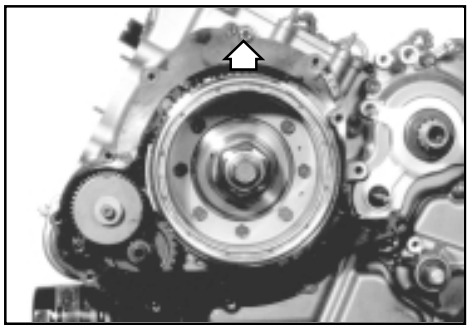

- The generator cover (see page D-59).

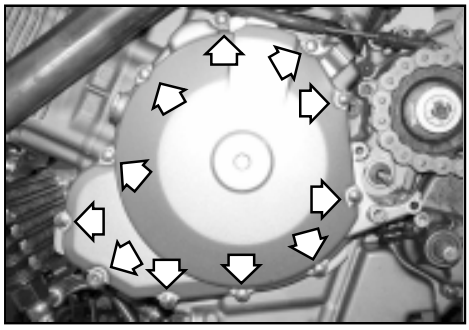

- The clutch throw-out assembly (see pages D-16 and D-17).

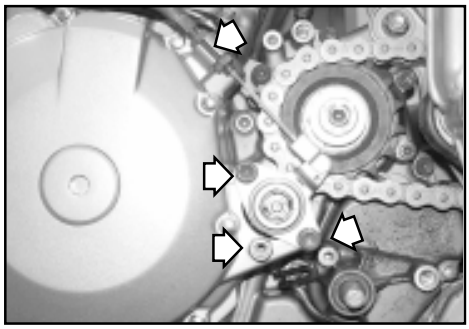

- The engine sprocket cover.
- The silencer protection by tightening the two fixings.
- Reassemble the left hand footrest and gearchange lever assembly as described in page D-18.

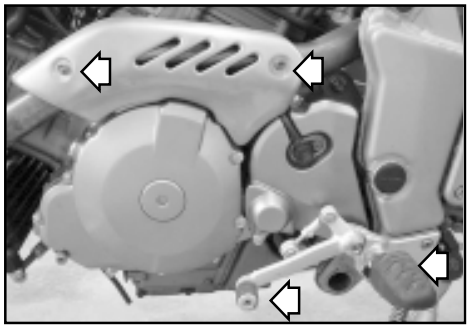

Adjust the following according to specifications:

	Page
* Engine oil	B-16
* Clutch lever play	B-19

Downloaded from www.Manualslib.com manuals search engine

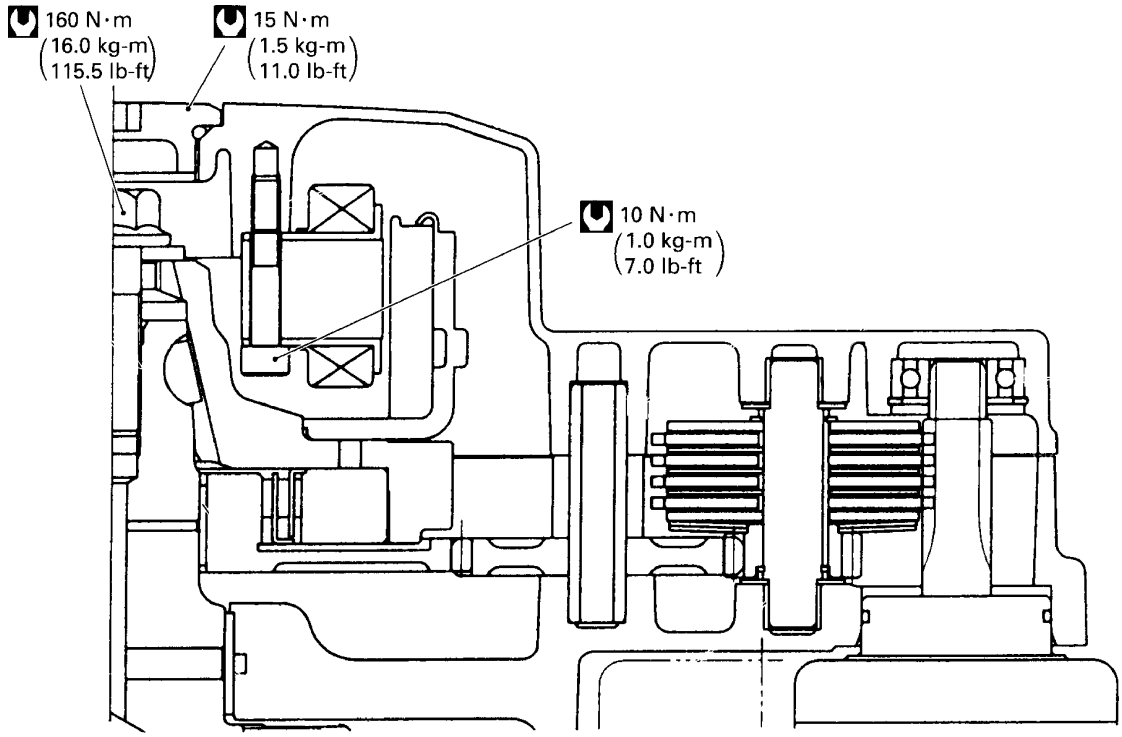

REMOVING THE STARTER MOTOR

After previously removing the sump guard as described in page xx, disconnect the starter motor lead and remove the starter motor by unscrewing the two mounting bolts.

- Detach the oil cooler from its supports and push it downwards.

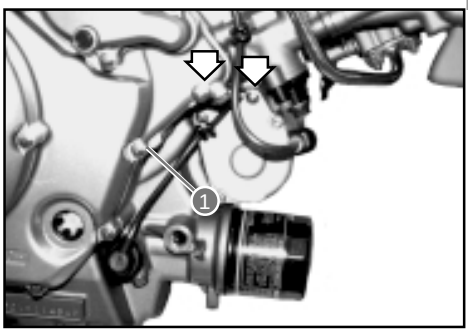

CHECKING AND SERVICING THE STARTER MOTOR

Refer to section G.

INSTALLING THE STARTER MOTOR

- Reinstall the starter motor and its two relative mounting bolts and tighten them to the specified torque.

NOTA:
** Fit clamp 1 to the bolt as shown in the figure.*
** Apply specific product to the starter motor O-ring.*

Specific product: AGIP GREASE 30

To prevent oil leakage, use a new O-ring.

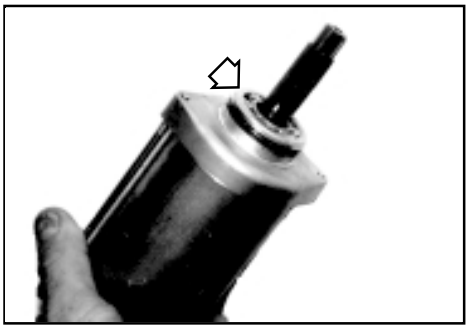

Downloaded from www.Manualslib.com manuals search engine

GEAR PRESELECTOR

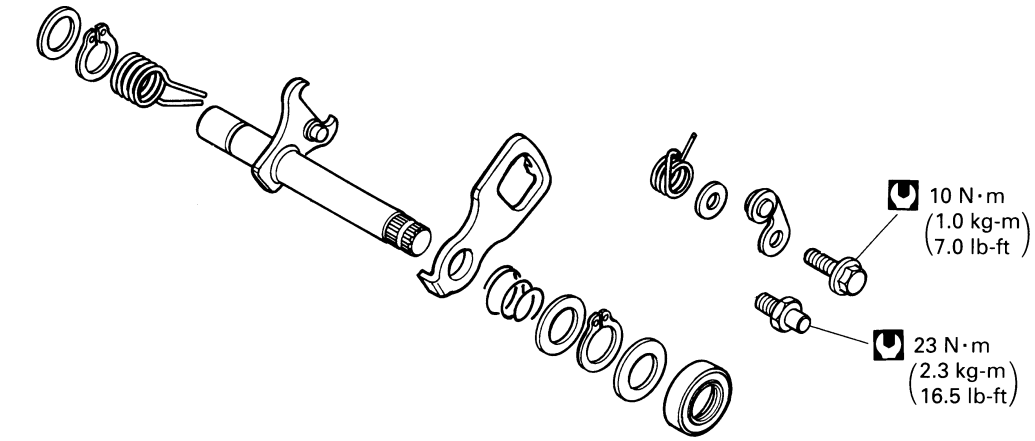

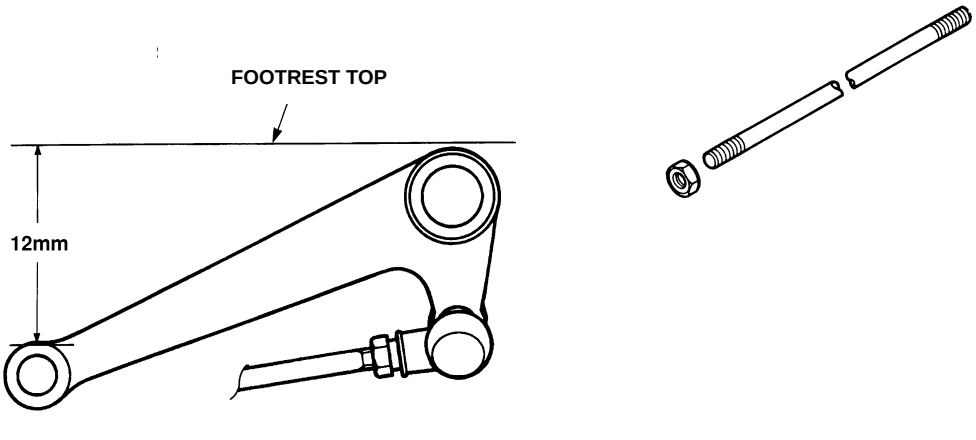

FOOTREST TOP

12mm

GEAR CHANGE LEVER HEIGHT

CONTENTS

REMOVING THE GEAR PRESELECTOR ASSEMBLY D-144
CHECKING AND SERVICING THE GEAR PRESELECTOR ASSEMBLY D-146
INSTALLING THE GEAR PRESELECTOR ASSEMBLY D-148

Downloaded from www.Manualslib.com manuals search engine

REMOVING THE GEAR PRESELECTOR ASSEMBLY

After draining the oil from the engine, remove the components listed below in the order indicated.

Refer to the pages indicated for details on how to perform each step.

Remove:

- The engine pinion cover and the silencer protection (see page D-7 and D-8).
- The left hand footrest and gearchange lever assembly.

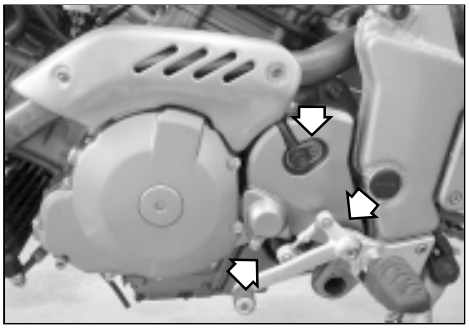

- The speed sensor rotor (see page D-16.)
- The clutch disengagement assembly (see page D-16.)

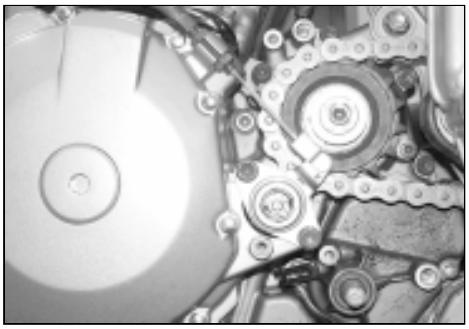

- The engine pinion (see page D-17.)

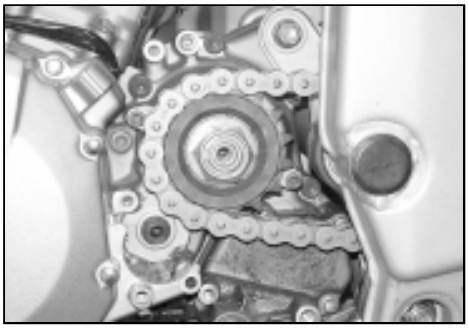

Downloaded from www.Manualslib.com manuals search engine

- Remove the gear covering by unscrewing the five relative fixings (see page D-35.)

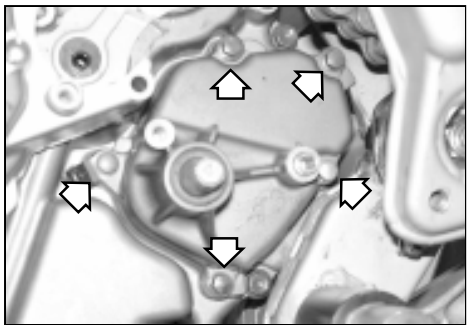

- The dowel pins.
- The gasket (see page D-35).
- The gear shaft/arm (see page D-36).

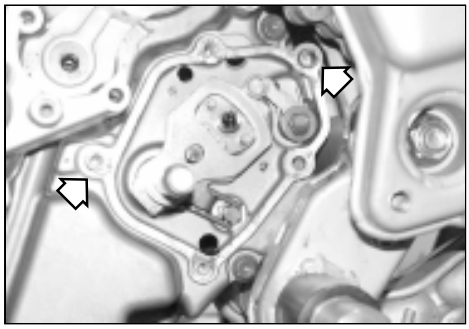

- The gear preselector plate.
- The gear preselector stop.
- The gear arm stop bolt (see page D-36).

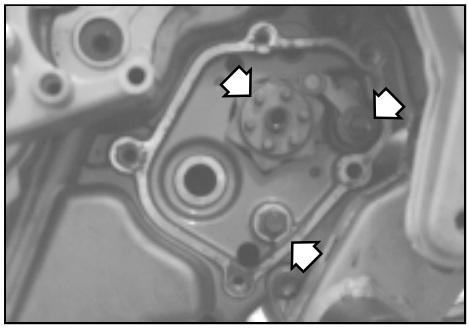

Downloaded from www.Manualslib.com manuals search engine

CHECKING AND SERVICING THE GEAR PRESELECTOR ASSEMBLY

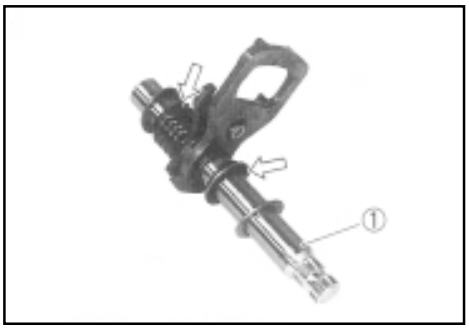

REMOVING THE GEAR SHAFT/ARM

- Remove the following parts from gear shaft/arm assembly **1**:

2 Washer
3 Circlip
4 Gear shaft return spring
5 Gear preselector plate
6 Plate return spring
7 Washer
8 Circlip
9 Washer

Specific tool: 800096765 - Snap ring pliers

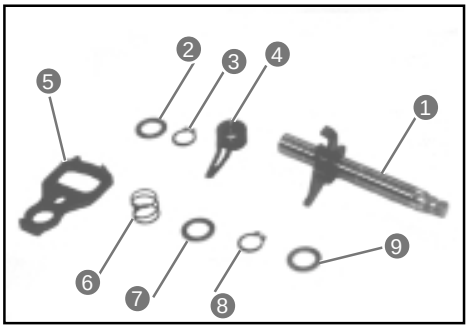

CHECKING THE GEAR SHAFT/ARM

Check if gear shaft/arm assembly **1** is worn or bent.

CHECKING THE RETURN SPRINGS

Check if return springs **4** and **6** show any signs of damage or fatigue.

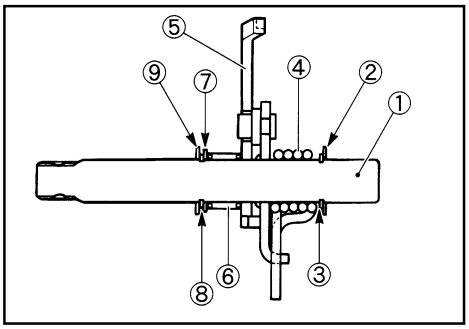

FITTING THE GEAR SHAFT/ARM

- Fit the following parts on gear shaft/arm assembly **1** as shown in the figure at the right.

2 Washer
3 Circlip
4 Gear shaft return spring
5 Gear preselector plate
6 Plate return spring
7 Washer
8 Circlip
9 Washer

Specific tool: 800096765 - Snap ring pliers

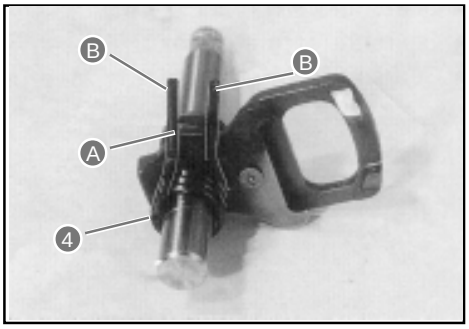

*When fitting gear shaft return spring **4**, position gear arm stop **A** between shaft return spring ends **B**.*

Downloaded from www.Manualslib.com manuals search engine

CHECKING THE OIL SEAL

Check if the gear shaft oil seal is damaged or if its lip is worn.
If any defects are found, replace the oil seal with a new one.

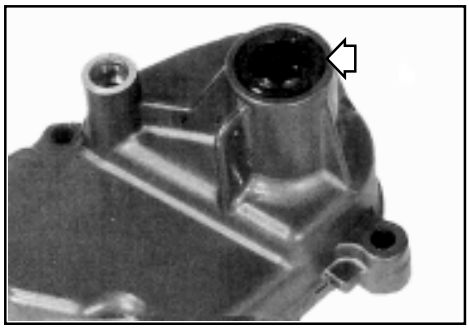

REPLACING THE OIL SEAL

- Remove the gear shaft oil seal from the gearbox cover.
- Fit a new oil seal.

Always replace removed oil seals with new ones.

Grease the oil seal lip to avoid damaging the oil seal when fitting the gearbox cover.

Specific product: AGIP GREASE 30

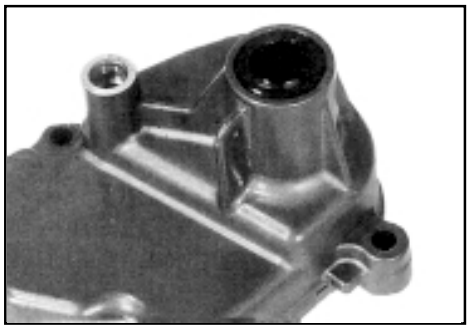

CHECKING THE GEAR SHAFT HOLE

Check if the gear shaft holes are worn or damaged.

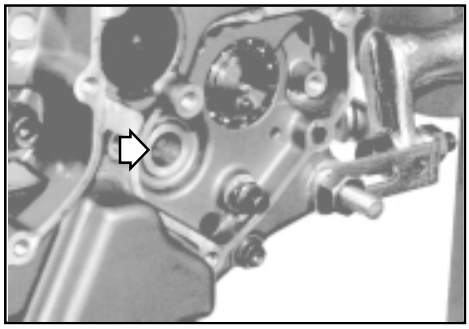

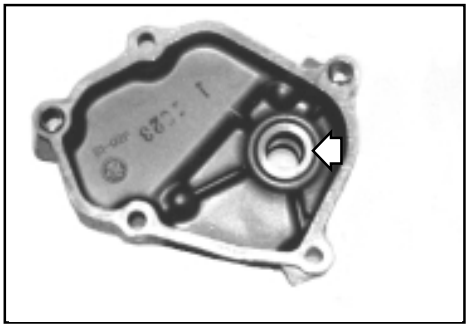

Downloaded from www.Manualslib.com manuals search engine

INSTALLING THE GEAR PRESELECTOR ASSEMBLY

Installation is obtained by following the removing procedure in reverse order.

Refer to the pages indicated for details on how to perform each step.

Fit:
- The gear arm stop bolt.
- The gear preselector stop.
- The gear preselector plate (see page D-46).

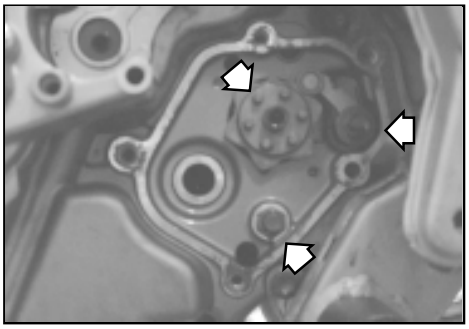

- The gear shaft/arm (see page D-46).
- The gasket.
- The dowel pins (see page D-47).

Replace the old gasket with a new gasket.

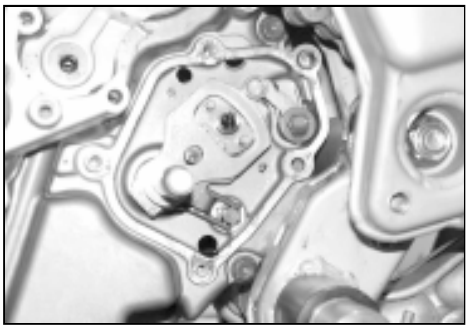

- The gearbox cover (see page D-47).

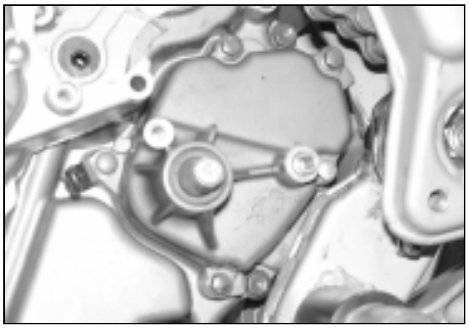

Downloaded from www.Manualslib.com manuals search engine

- The engine sprocket (see page D-16.)
- The speed sensor rotor (see page D-16)

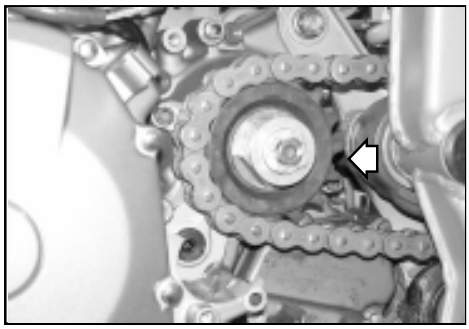

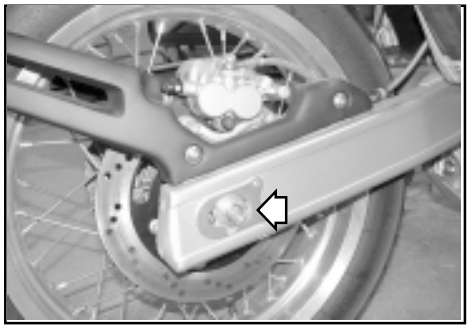

- The clutch throw-out assembly (see page D-17).

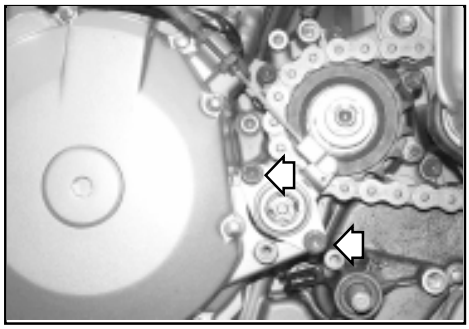

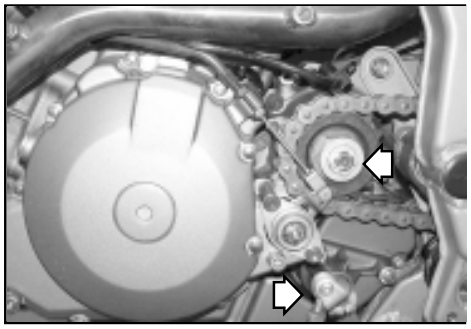

- The engine sprocket cover.
- The left hand footrest and gearchange lever assembly (see page D-18)

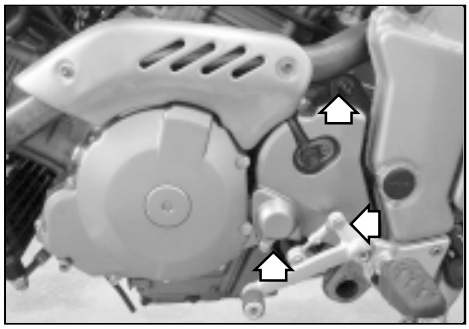

Downloaded from www.Manualslib.com manuals search engine

Adjust the following according to specifications:

	Page
* Engine oil	B-13
* Clutch lever play	B-15
* Drive chain slack	B-17

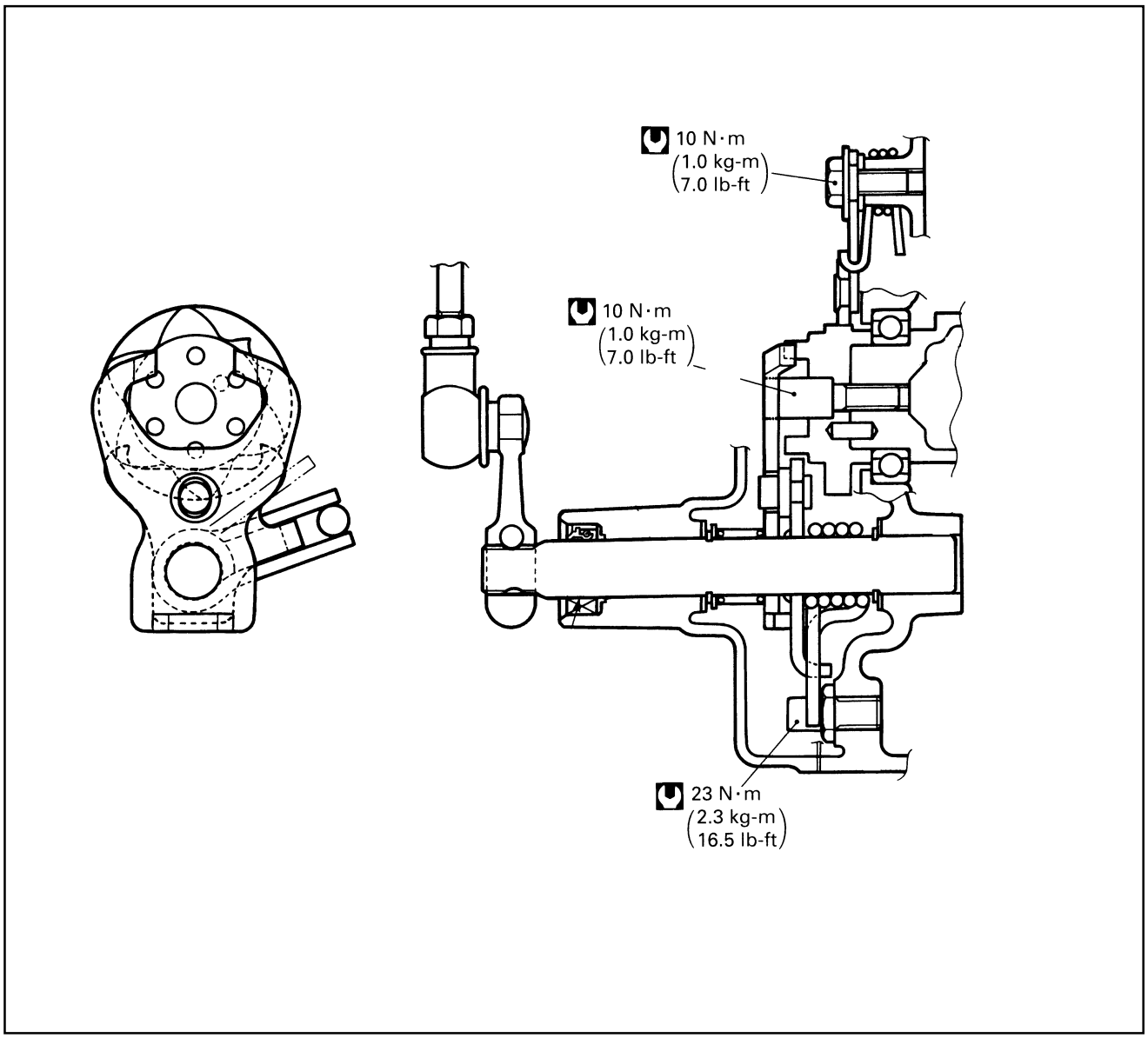

Downloaded from www.Manualslib.com manuals search engine

CRANKCASE/GEARBOX/CRANKSHAFT/CONNECTING ROD

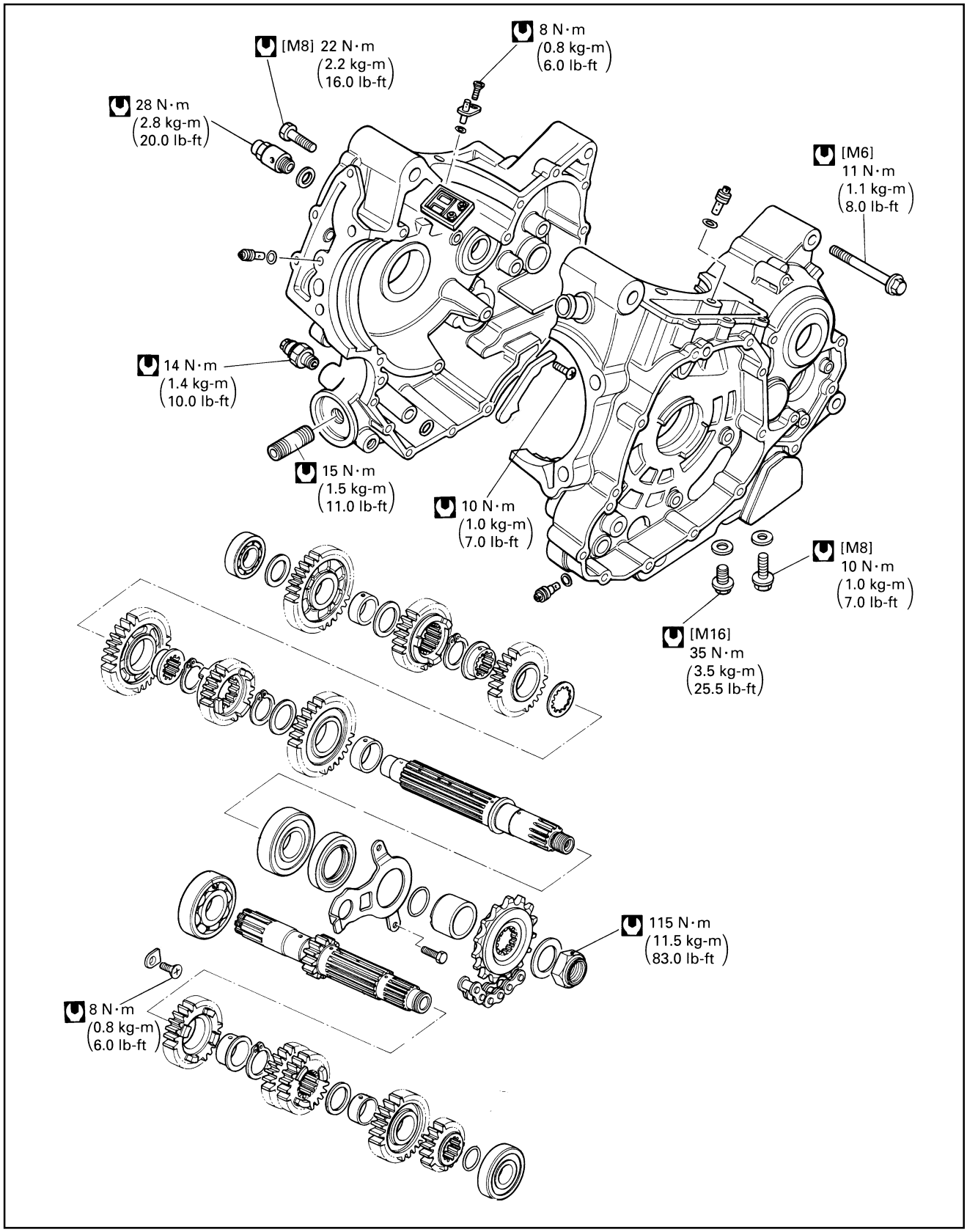

Downloaded from www.Manualslib.com manuals search engine

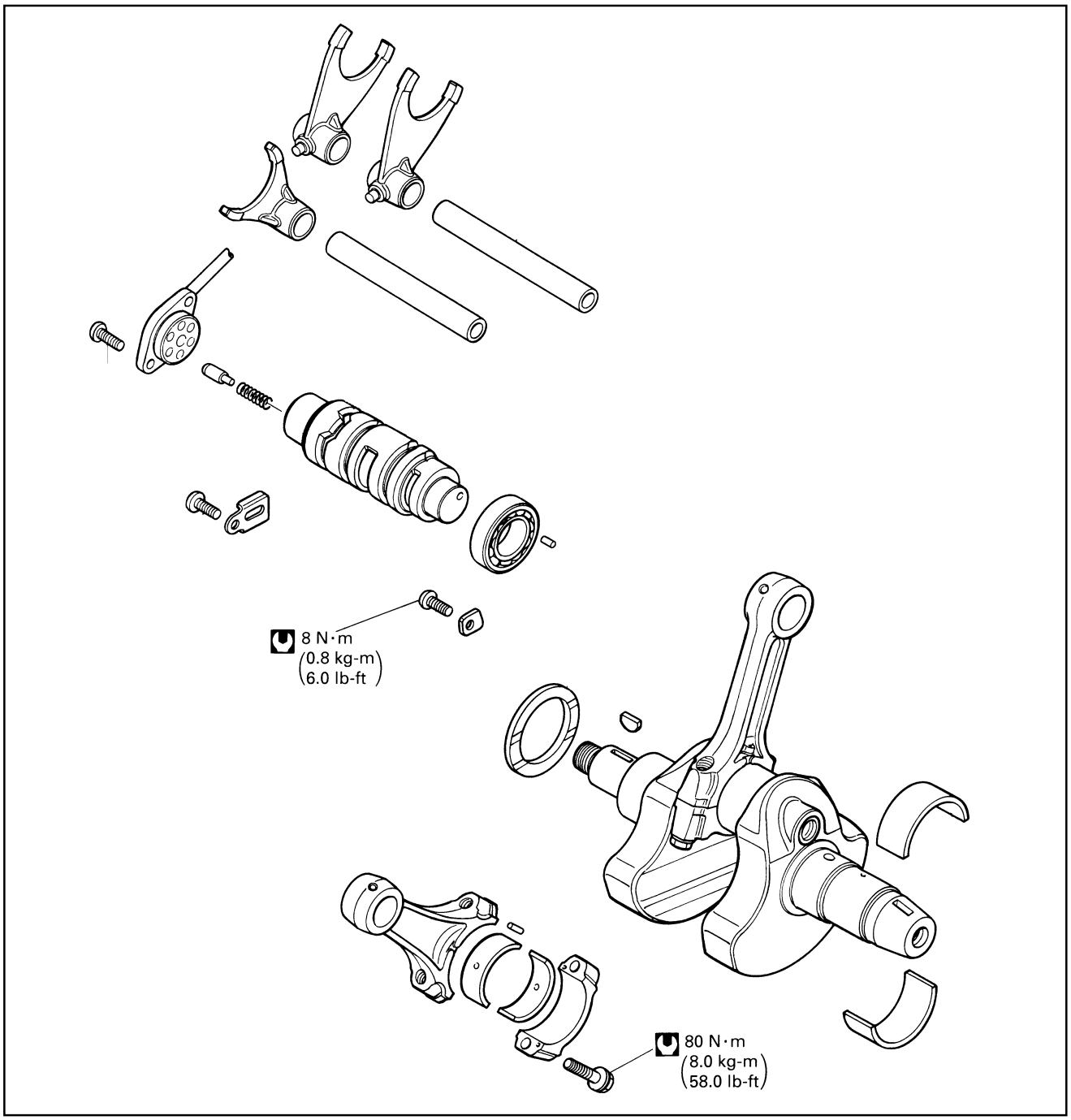

CONTENTS

REMOVING THE TRANSMISSION, THE CRANKSHAFT AND THE CONNECTING ROD D-153
CHECKING AND SERVICING THE TRANSMISSION D-153
CHECKING THE CONNECTING ROD AND THE CRANKSHAFT D-160
CHECKING AND SERVICING THE CONNECTING ROD BEARINGS/CRANKPINS D-160
CHECKING AND SERVICING THE CRANKSHAFT BEARINGS D-163
ADJUSTING THE CRANKSHAFT THRUST CLEARANCE D-167
INSTALLING THE TRANSMISSION, THE CRANKSHAFT AND THE CONNECTING ROD D-168

Downloaded from www.Manualslib.com manuals search engine

REMOVING THE TRANSMISSION, THE CRANKSHAFT AND THE CONNECTING ROD

The crankcase must be separated to allow the transmission, the crankshaft and the connecting rod to be serviced. Access to these engine parts is obtained by removing and disassembling the engine. Refer to the sections on engine removal and disassembly for information on how to remove these parts.

*** ENGINE REMOVAL ..... see page D-4.**
*** ENGINE DISASSEMBLY ..... see page D-20.**

CHECKING AND SERVICING THE TRANSMISSION

Identify the position of each removed component and sort the parts into groups (e.g. “driving”, “driven”, etc.) so that each component can be reinstalled in its original position.

FORK-GROOVE PLAY

Using a thickness gauge, measure the play of the gear change fork in its groove in the gear.
The play of each gear change fork plays an important role in ensuring smooth and reliable gear operation.

Service limit
Fork-groove play: 0,50 mm (0.0197 in)

If the play exceeds the specified limit, replace the fork, the gear, or both.

Specific tools: **Thickness gauge**
Vernier caliper

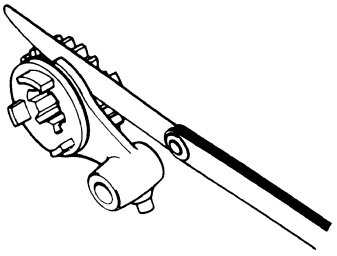

Checking play

Standard
Gear change fork groove width: 5,0-5,1 mm (0.1969-0.2008 in)

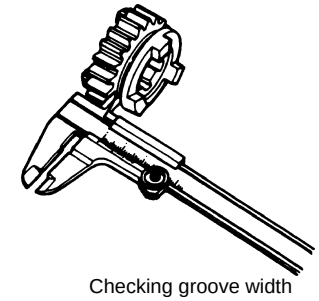

Checking groove width

Downloaded from www.Manualslib.com manuals search engine

Standard
Gear change fork thickness: 4,8-4,9 mm (0.1906-0.1929 in)

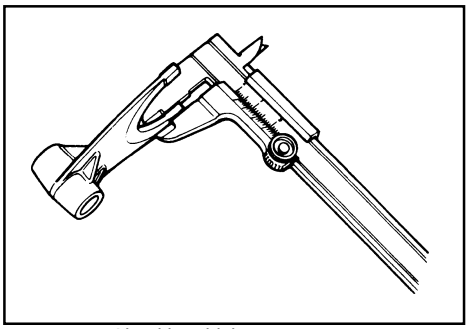

Checking thickness

REMOVAL
Countershaft

- Remove O-ring **1**, 2nd driving gear **2**, and 6th driving gear **3**.

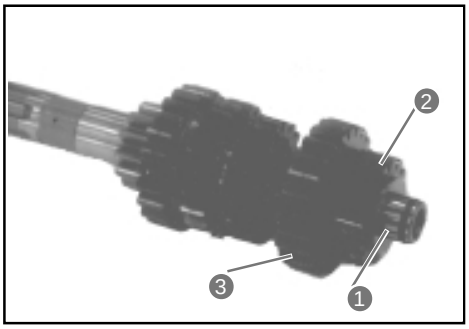

Replace the removed O-ring with a new one.

- Remove 6th driving gear bushing **4**, washer **5**, and 3rd/4th driving gears **6**.

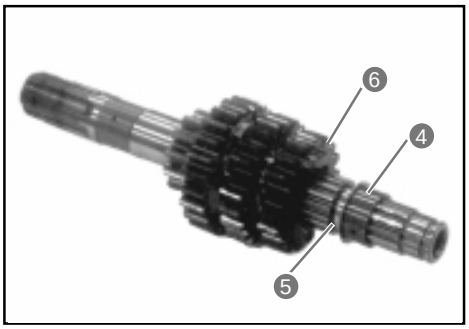

- Remove the circlip using the specially designed tool.

Specific tool: 800096765 - Snap ring pliers

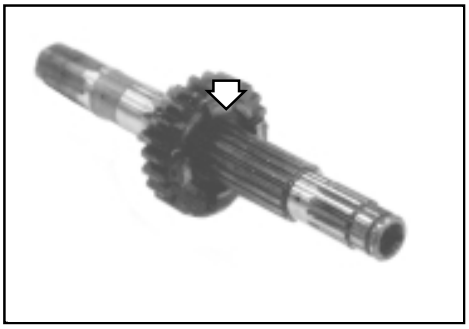

- Remove 5th driving gear **7** and its bushing **8**.

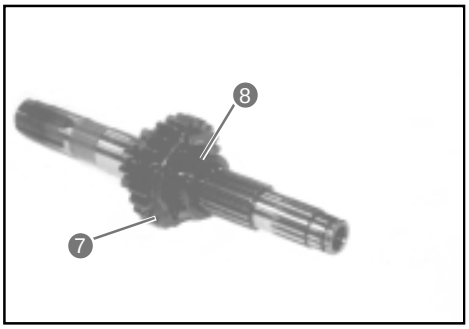

Downloaded from www.Manualslib.com manuals search engine

Driving shaft

- Remove 1st driven gear **1** and washer **2**.

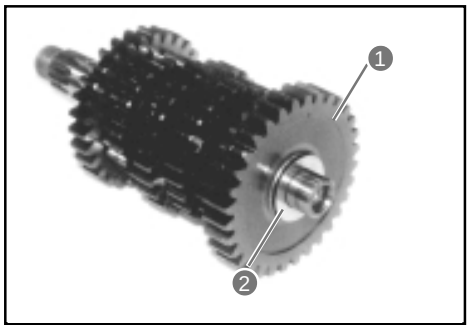

- Remove 1st driven gear bushing **3**, washer **4**, and 5th driven shaft **5**.

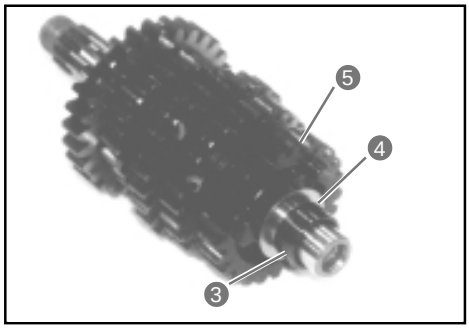

- Remove the circlip using the specially designed tool.

Specific tool: 800096765 - Snap ring pliers

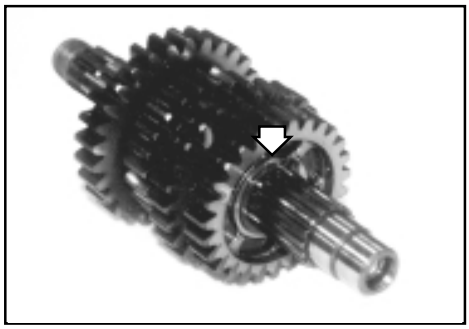

- Remove 4th driven gear **6** and its bushing **7**.

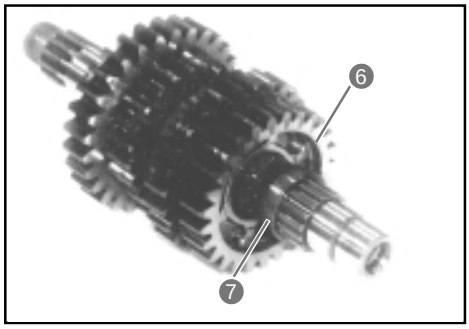

- Remove washer **8** and 3rd driven gear **9**.

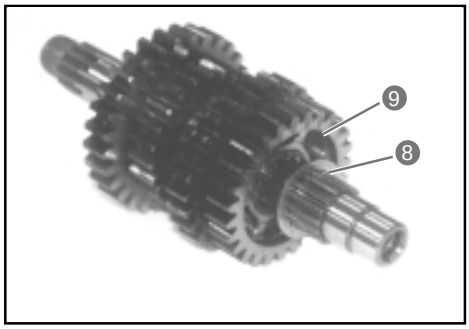

Downloaded from www.Manualslib.com manuals search engine

- Remove 3rd driven gear bushing **1**.
- Remove 6th driven gear **2** after removing the circlip.

Specific tool: 800096765 - Snap ring pliers

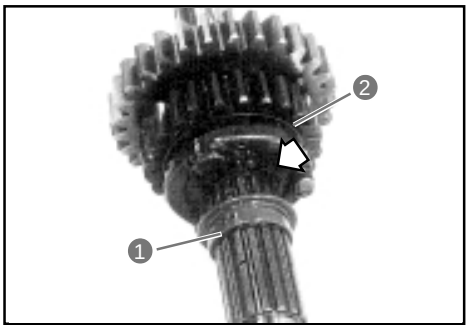

- Remove the circlip using the specially designed tool.

Specific tool: 800096765 - Snap ring pliers

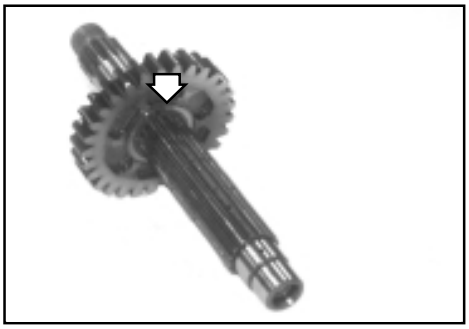

- Remove 2nd drive gear **3**, its bushing **4**, and washer **5**.

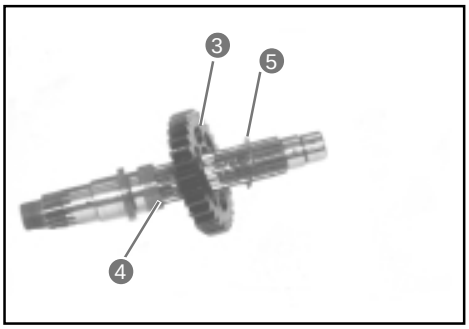

ASSEMBLY

Assemble the countershaft and the driving shaft by following the reverse procedure to disassembly. Pay attention to the following.

** Turn the bushings manually to ensure that they rotate smoothly.*
** Before fitting the gears, apply a film of molybdenum bisulphide or engine oil to the driving shaft and the countershaft.*
** Grease the O-ring before fitting it.*

Specific products: **MOLIKOTE**
AGIP GREASE 30

Downloaded from www.Manualslib.com manuals search engine

*** Never reuse a removed circlip. After removing the circlip from the shaft, discard it and fit a new circlip.**
*** When fitting a new circlip, take care not to part its ends more than is required to fit it on the shaft.**
*** After fitting a circlip, always check that it is fully and securely seated in its groove.**

When reassembling the transmission, pay attention to the positions of the washers and the circlips. The sectional view shown here will serve as a reference for correctly fitting gears, washers and circlips (see pages D-158 and D-159).

- When fitting a new circlip, pay attention to its direction. Fit it so that the thrust side is as shown in the figure.

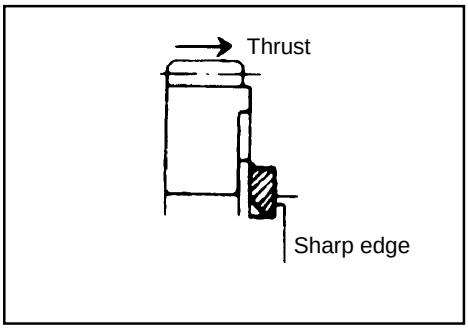

After fitting the bushings of the 3rd and 4th driven gears on the driving shaft, align shaft oil holes A with bushing oil holes B.

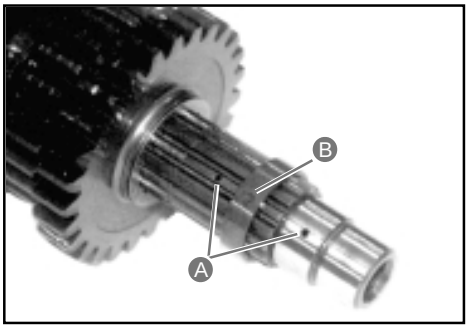

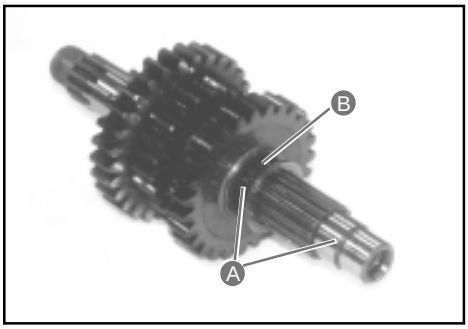

Downloaded from www.Manualslib.com manuals search engine

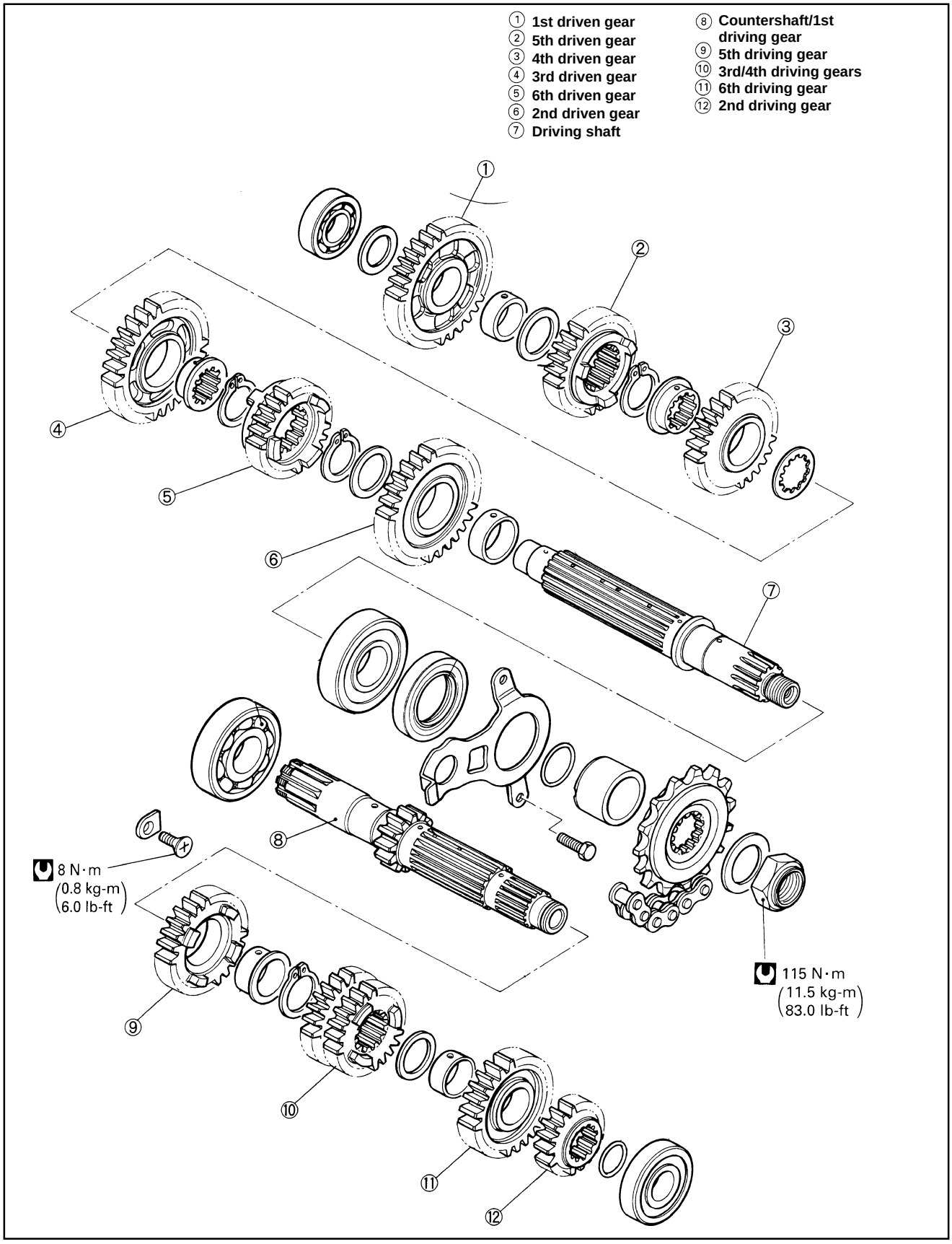

Downloaded from www.Manualslib.com manuals search engine

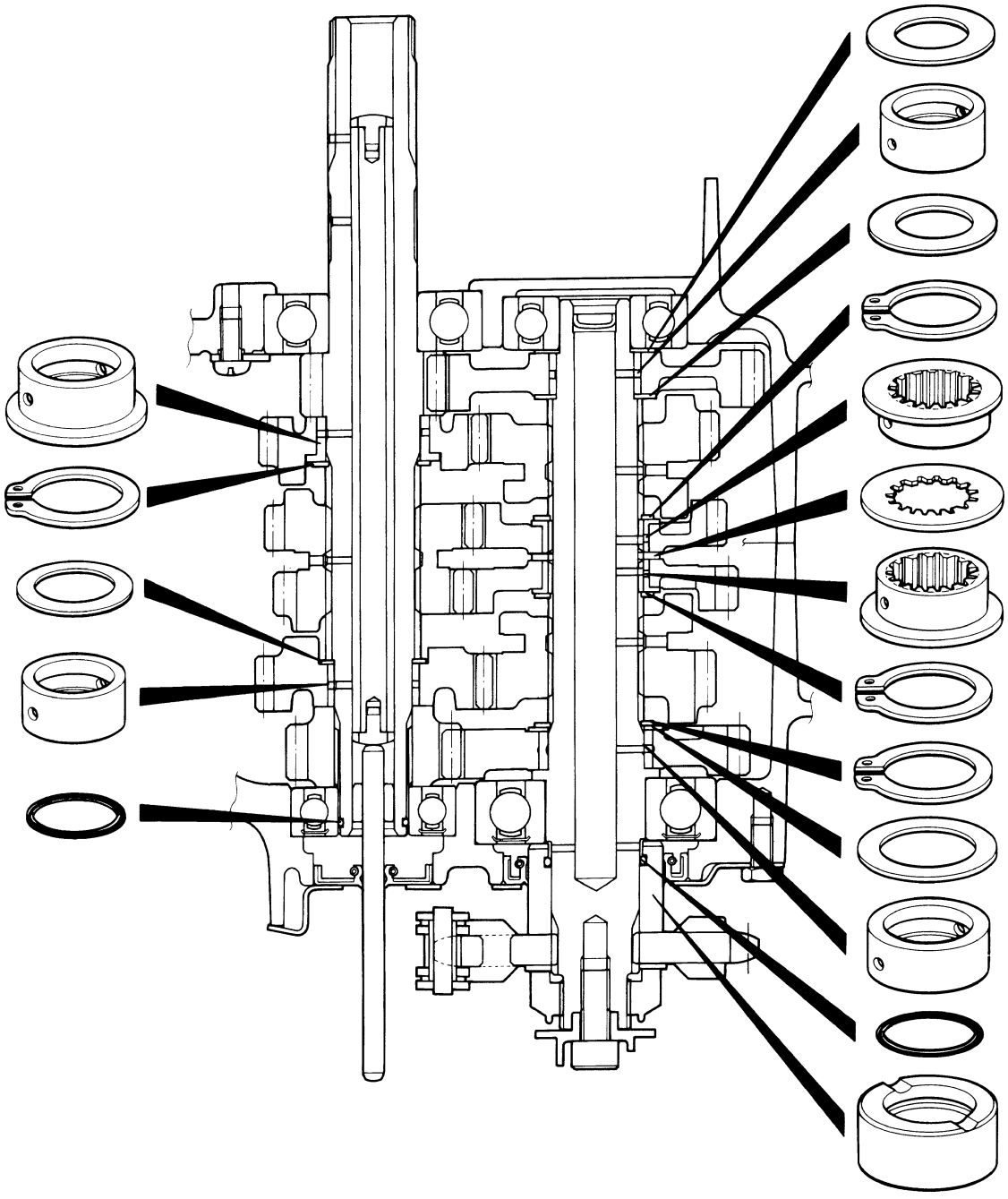

Downloaded from www.Manualslib.com manuals search engine

CHECKING THE CONNECTING ROD AND THE CRANKSHAFT

CONNECTING ROD SMALL END I.D.

Measure the small end inside diameter with a bore gauge.

Specific tools:
Comparator (1/1000 mm, 1 mm, 0.00004-0.03937 in)
Bore gauge (18-35 mm, 0.708-1.389 in)

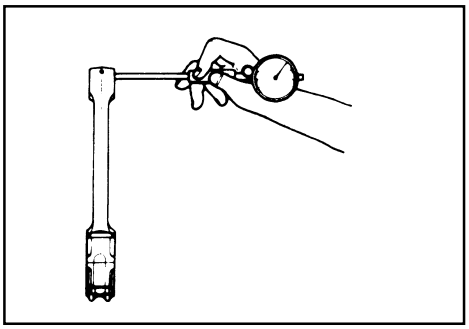

Service limit
Small end I.D.: 22,040 mm (0.8677 in)

If the small end inside diameter exceeds the specified limit, replace the connecting rod.

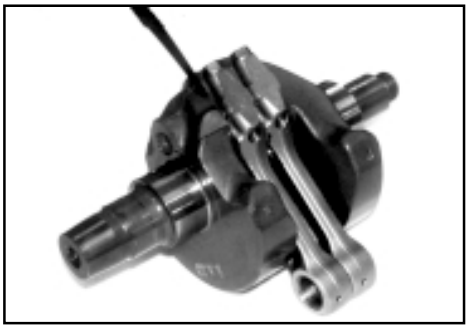

CONNECTING ROD BIG END SIDE CLEARANCE

Measure the big end side clearance with a thickness gauge.

Service limit
Big end side clearance: 0,5 mm (0.0197 in)

Standard
Big end width: 21,95-22,00 mm (0.8642-0.8661 in)
Crankpin width: 44,17-44,22 mm (1.7389-1.7410 in)

Specific tool: Micrometer (0-25 mm, 0-0.9842 in)

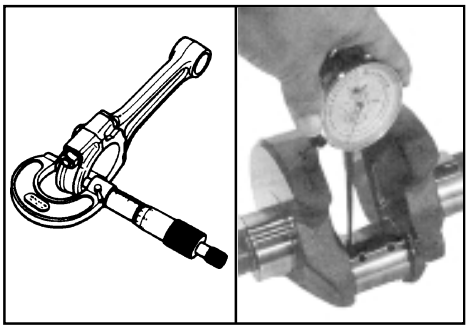

CHECKING AND SERVICING THE CONNECTING ROD BEARINGS/CRANKPINS

CHECKING THE CONNECTING ROD BEARINGS-CRANKPINS

- Loosen the bearing cap bolts and tap them with a plastic mallet to remove the bearing cap.

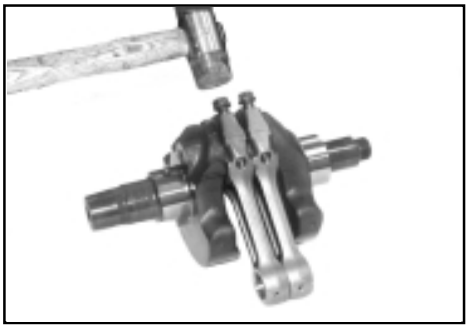

- Remove the connecting rods and mark them to identify the cylinder.
- Check the bearing surfaces for signs of melting, pitting, burning or other defects. If necessary, replace with a set of bearings complying with specifications.



Downloaded from www.Manualslib.com manuals search engine

SELECTING THE CONNECTING ROD-CRANKPIN BEARINGS

- Position some plastigauge axially on the crankpin, avoiding the oil hole, in the top dead centre or low dead centre position as shown in the figure.
- Tighten the bearing cap bolts in two steps to the prescribed torque.

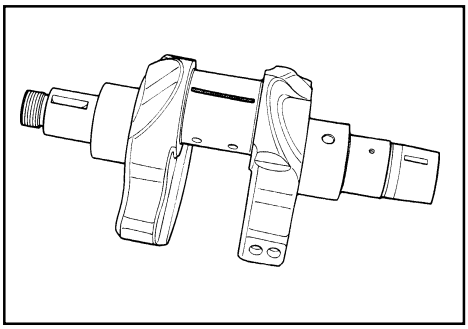

*When fitting the bearing cap to the crankpin, be sure to distinguish the side with inside diameter code **B** from the other side.*
*The inside diameter codes must always face the cylinder intake valves, and oil holes **A** must face inwards.*

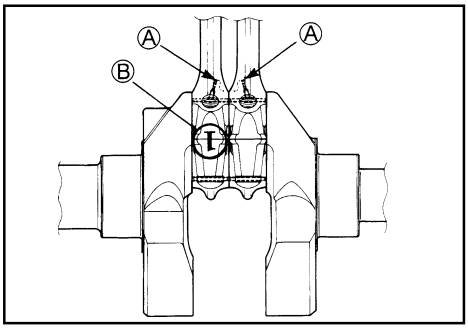

Tightening torques:
Connecting rod bearing cap bolt **(initial) 40 N·m (0,4 kg-m) (29.2 lb·ft)**
(final) 80 N·m (0,8 kg-m) (58.4 lb·ft)
Specific tool: 800096651 - Thickness gauge
Specific tool: 800096872 - Thickness gauge

Never turn the crankshaft or the connecting rod after inserting a piece of plastigauge.

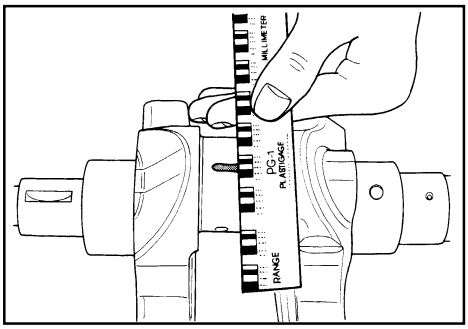

- Remove the bearing cap and measure the length of the compressed plastigauge with the scale. Take the measurement at the widest portion.

Service limit
Connecting rod big end oil clearance: 0,080 mm (0.00315 in)

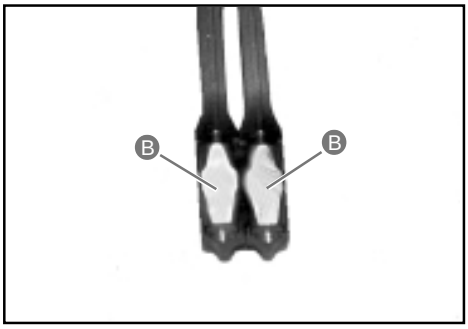

- If the oil clearance exceeds the specified limit, select the necessary bearings from the bearing selection table.
- Check the corresponding connecting rod inside diameter code **B**, “1” or “2”.
- Check the corresponding crankpin outside diameter code **C**, “1”, “2” or “3”.
- Crankpin outside diameter code **C**, “1”, “2” or “3”, is stamped on the left crank.

Bearing selection table

		Crankpin O.D. C		
	Code	1	2	3
Conn. Rod I.D. coded	1	Green	Black	Brown
	2	Black	Brown	Yellow

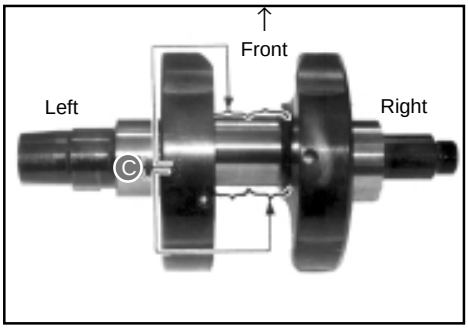

Standard
Connecting rod big end oil clearance: 0,032-0,056 mm (0.00125-0.00224 in)

Downloaded from www.Manualslib.com manuals search engine

Connecting rod I.D. specification

Code B	I.D. Specification
1	48.000-48.008 mm (1.8897-1.8904 in)
2	48.008-48.016 mm (1.8901-1.8904 in)

Connecting rod O.D. specification

Code C	O.D. Specification
1	44.992-45.000 mm (1.7713-1.7716 in)
2	44.984-44.992 mm (1.7710-1.7713 in)
3	44.976-47.984 mm (1.7707-1.8891 in)

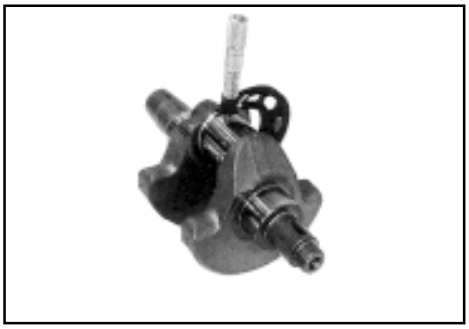

Specific tool: Micrometer (25-50 mm, 0.984-1.968 in)

Bearing thickness

Colore (No. parte)	Spessore
Green (12164-02F00-0A0)	1.480-1.484 mm (0.0583-0.0584 in)
Black (12164-02F00-0B0)	1.484-1.488 (0.0584-0.0585 in)
Brown (12164-02F00-0C0)	1.488-1.492 mm (0.0585-0.0587 in)
Yellow (12164-02F00-0D0)	1.492-1.496 mm (0.0587-0.0589 in)

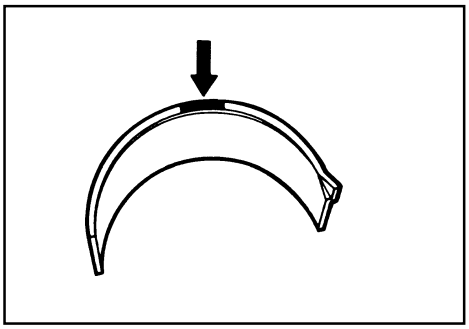

Replace the bearing as a set.

ASSEMBLING THE BEARINGS

- When fitting the bearings in the bearing cap and the connecting rod, be sure to fix stop **D** first and then insert the other end.

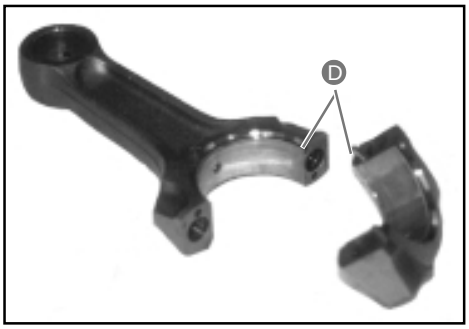

Downloaded from www.Manualslib.com manuals search engine

- Apply engine oil and specific product to the crankpin and bearing surface.

Specific product: MOLIKOTE

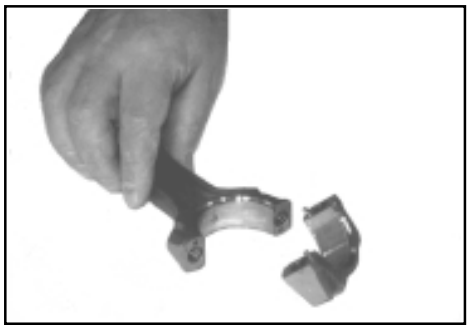

- When fitting the connecting rods to the crankshaft, ensure that connecting rod inside diameter codes **A** face the cylinder intake valves and that oil holes **B** face inwards.
- Tighten the bearing cap bolts with the specified torque.

Tightening torques:

Connecting rod bearing cap bolt	**(initial) 40 N·m (4,0 kg-m) (29.2 lb·ft)**
	(final) 80 N·m (8,0 kg-m) (58.4 lb·ft)

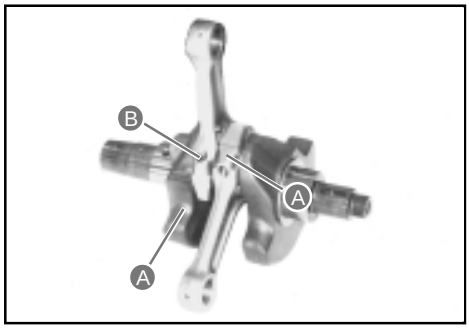

- Check that the connecting rod rotates freely.

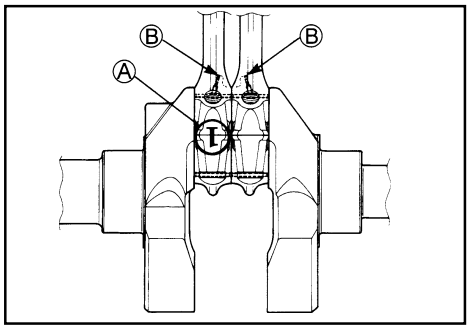

CHECKING AND SERVICING THE CRANKSHAFT BEARINGS

CHECKING THE CRANKSHAFT BEARINGS

- Check the crankshaft bearings for damage. If the bearings are damaged, replace them with a specified set of bearings.

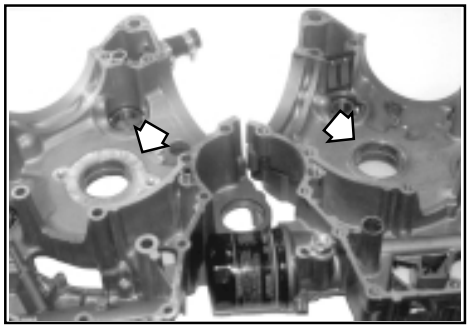

- Check the crankshaft journals for damage.
- Using the specially designed tool, measure the O.D. of the crankshaft journals.

Standard
Crankshaft journal O.D.: 47,985-48,000 mm (1.8891-1.8897 in)

Specific tool: Micrometer (25-50 mm, 0.984-1.968 in)

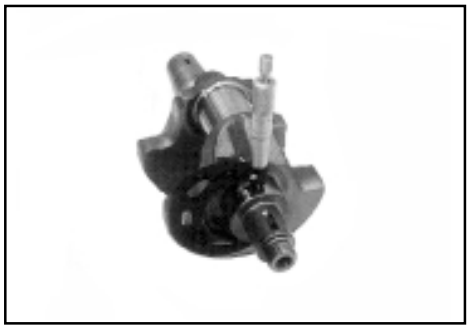

Downloaded from www.Manualslib.com manuals search engine

SELECTING THE CRANKSHAFT BEARINGS

Select the specified bearings by referring to crankcase hole I.D. code. The crankcase hole i.d. codes A, “A”, “B” or “C”, are stamped on the inside of each crankcase half.

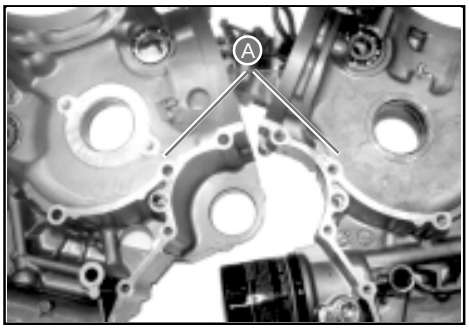

Bearing selection table

I.D. Code A	I.D. Specification	Bearing
A	52,000-52,006 mm (2.0472-2.0474 in)	Green
B	52,006-52,012 mm (2.0474-2.0477 in)	Black
C	52,012-52,018 mm (2.0477-2.0479 in)	Brown

Bearing thickness

Colour (part no.)	Thickness
Green (12229-02F10-0A0...Green 12229-02F00-0B0...Black)	1.988-1.991 mm (0.0782-0.0783 in)
Black (12229-02F10-0B0...Green 12229-02F00-0B0...Black)	1.991-1.994 mm (0.0783-0.0785 in)
Brown (12229-02F10-0C0...Green 12229-02F00-0C0... Black)	1.994-1.997 mm (0.0785-0.0786 in)

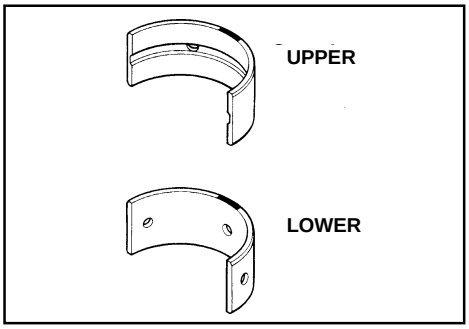

Replace the bearing as a set.

REPLACING THE CRANKSHAFT BEARINGS

- Replace the crankshaft bearings using the specially designed tool and following the procedure described below.

Specific tool: 800096654 - Crankshaft bearing remover/installer

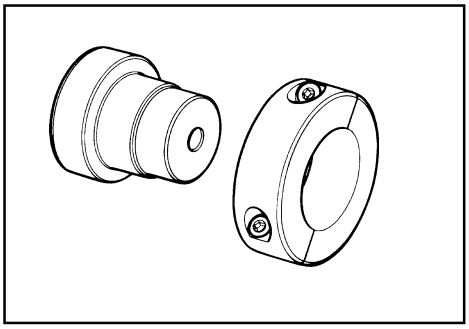

- Apply the special tool as shown in the figure to remove the crankshaft bearings.

Remove the crankshaft bearings in one direction, from the inside to the outside of each crankcase half.

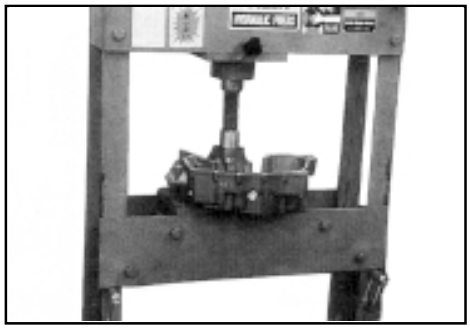

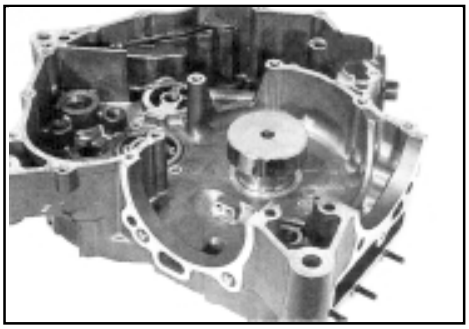

Downloaded from www.Manualslib.com manuals search engine

- Gradually remove the bearing using the special tool and a hand press.

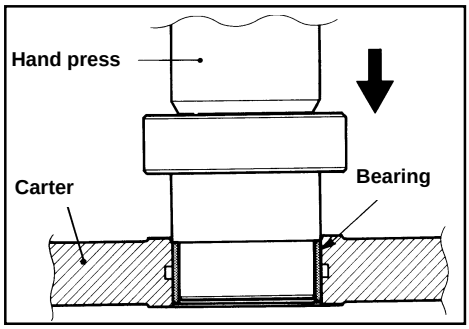

Removed bearings must be replaced with new ones.

We recommend using a hand press to remove the crankshaft bearings. However, the crankshaft bearings can also be removed with the following special tools.

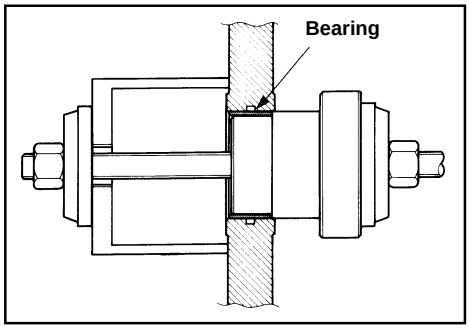

Special tools:

800096678 - Bearing installer set
800096677 - Final drive bearing separating/assembling tool

- Fit the specified crankcase bearings to the special tool.



- **Before fitting the bearings, apply engine oil to the bearings and the special tool.**
- **When inserting the bearing, align the bearing side with engraved line A and the bearing rim with the contact surface of the special tool.**

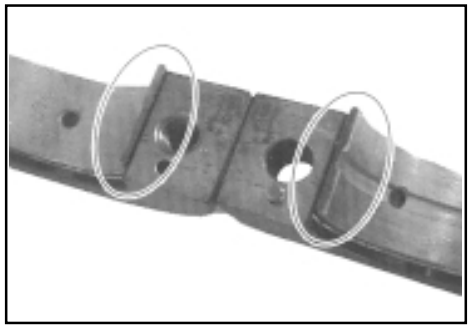

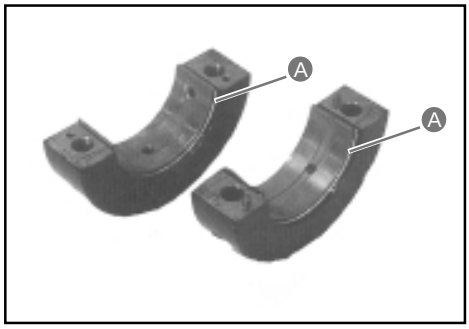

- Tighten the bolts of the special tool with the specified torque.



Tightening torque:
Special tool bolt **23 N·m (2,3 kg-m) (16.79 lb·ft)**

Downloaded from www.Manualslib.com manuals search engine

Before fitting the bearing, slightly shave the sharp edge inside the bevel with an oilstone and then wash the crankcase hole with engine oil.

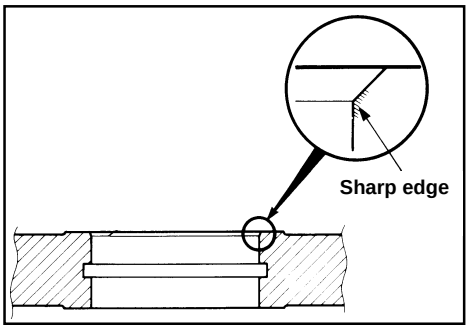

- Insert the bearings installed in the special tool into the crankcase half as shown in the figure.

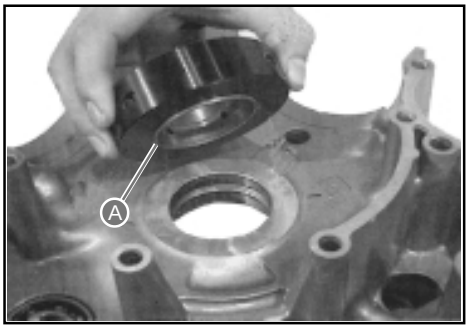

- **Ensure that bearing projection A faces the crankcase hole.**
- **Be sure to position the grooved bearing on the upper side and the ungrooved bearing on the lower side.**
- **Align the bearing rims and the surface of the special tool with line B on the crankcase.**

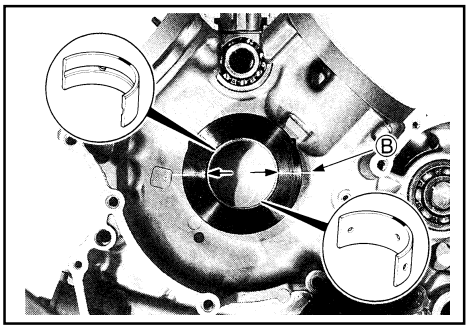

- Apply enough engine oil to the special tool and the bearing and then carefully position the special tool.
- Using a hand press, gradually insert the bearing into the crankshaft bearing hole until special tool **1** comes into contact with special tool **2** and stops.

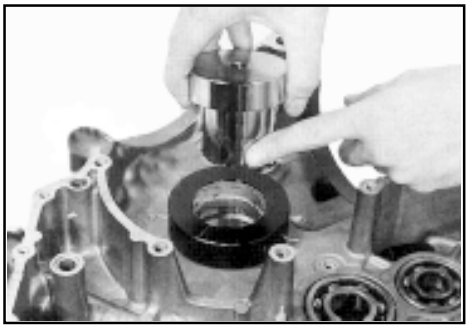

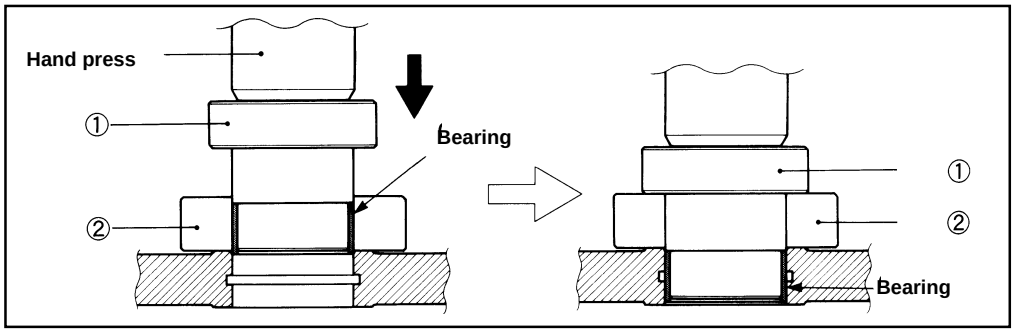

Downloaded from www.Manualslib.com manuals search engine

We recommend using a hand press to remove the crankshaft bearings. However, the crankshaft bearings can also be removed with the following special tools.

Special tools:

800096678 - Bearing installer set
800096677 - Final drive bearing separating/assembling tool

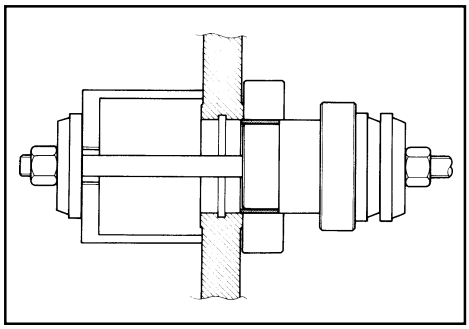

- After installing the bearings, check that their surface is not scratched or damaged.

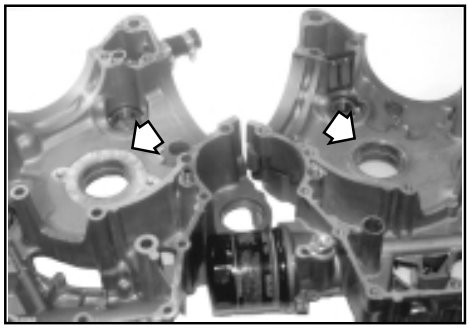

ADJUSTING THE CRANKSHAFT THRUST CLEARANCE

- Fit the crankshaft in the left-hand crankcase half and fit the thrust shim to the crankshaft.
- Fit the right-hand crankcase half and temporarily tighten the crankcase bolts.

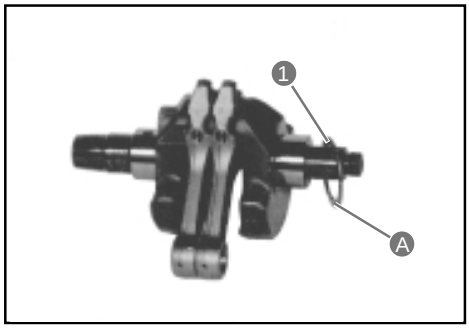

** There is no need to apply specific product to the mating surface.*
** The face with oil groove **A** of thrust shim **1** must face the crank.*

- Install the generator rotor with the key and tighten its bolt temporarily.
- Fit the thrust washer and the primary driving gear to the right end of the crankshaft and then tighten the primary driving gear bolt with the specified torque (see paged D-48 and D-49).

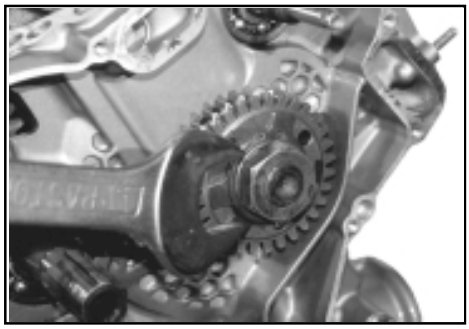

Tightening torque:

Primary driving gear bolt	**95 N·m (9,5 kg-m) (69.35 lb·ft)**

Downloaded from www.Manualslib.com manuals search engine

- Using a thickness meter, measure the thrust clearance at some points between the crankcase and the thrust washer.

Standard
Crankshaft thrust clearance: 0,050-0,100 mm (0.00197-0.00394 in)



Specific tool: Thickness gauge

If the thrust clearance exceeds the specified range, adjust it by following these steps:

- Remove the thrust shim and measure its thickness with a micrometer.
- Change the thrust shim if its thickness is incorrect.
- Measure the thrust clearance again as previously described.

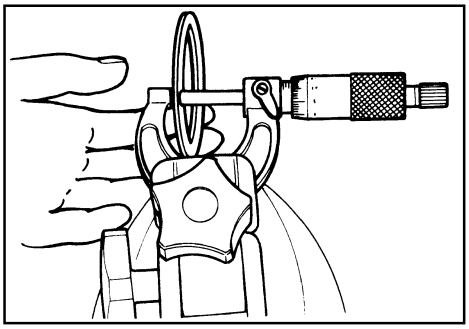

Specific tool: Micrometer (0-25 mm, 0-0.9842 in)

Checking that the shim thickness is in the standard range

Unit: mm/in

Part no.	Thrust shim thickness
800097666	1,925-1,950 (0.07579-0.07677)
800097667	1,950-1,975 (0.07677-0.07775)
800097668	1,975-2,000 (0.07775-0.07874)
800097669	2,000-2,025 (0.07874-0.07972)
800097670	2,025-2,050 (0.07972-0.08070)
800097671	2,050-2,075 (0.08070-0.08169)
800097672	2,075-2,100 (0.8169-0.08267)
800097673	2,100-2,125 (0.08267-0.08366)
800097674	2,125-2,150 (0.08366-0.08464)
800097675	2,150-2,175 (0.08464-0.08562)

INSTALLING THE TRANSMISSION, THE CRANKSHAFT AND THE CONNECTING ROD

Refer to the sections on engine assembly and installation for instructions on how to install these engine parts.

*** ENGINE ASSEMBLY ..... Refer to pages D-40/D-80.**
*** ENGINE INSTALLATION ..... Refer to pages D-13/D-19.**

Downloaded from www.Manualslib.com manuals search engine

ENGINE LUBRICATION SYSTEM

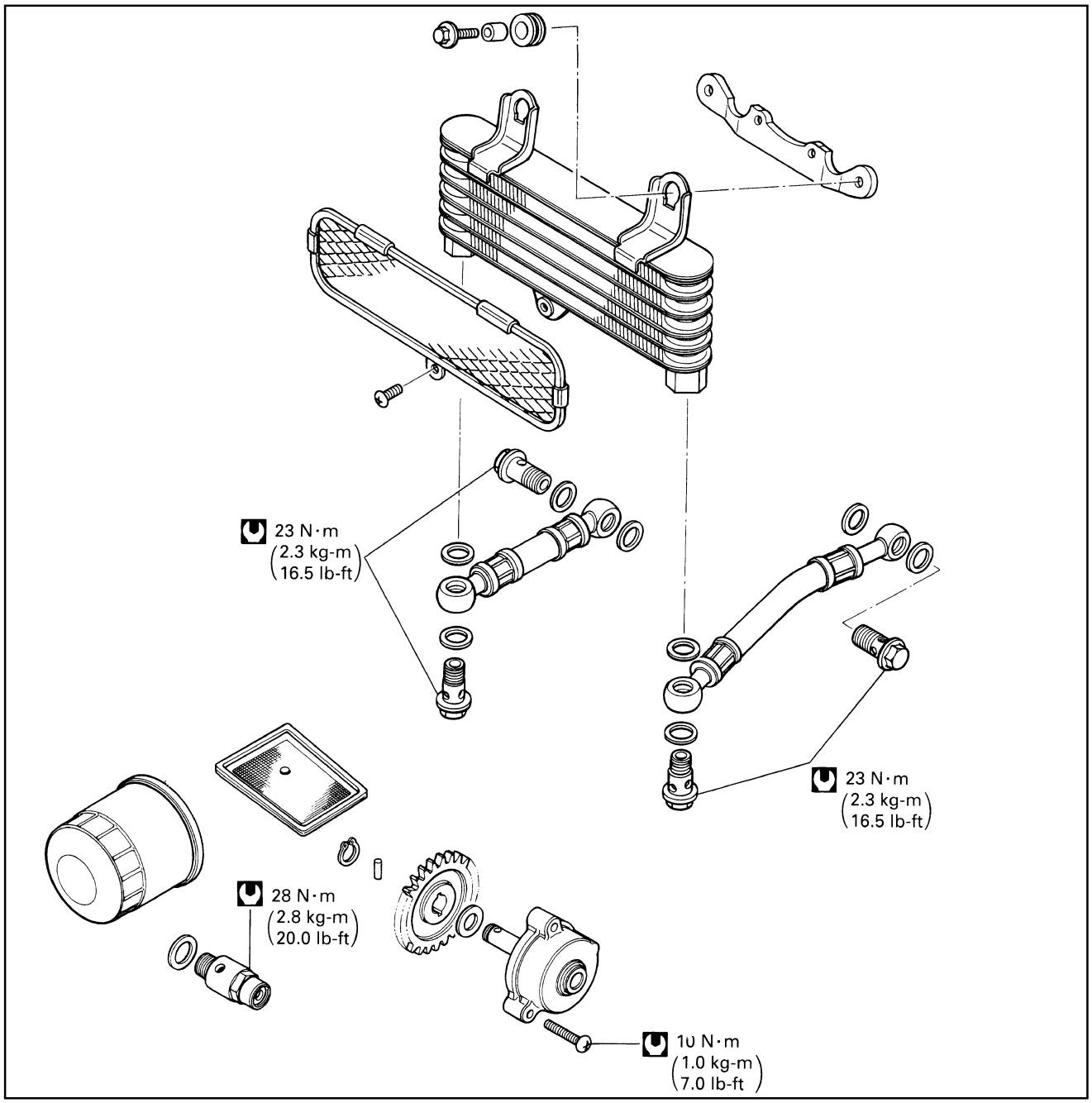

CONTENTS

OIL PUMP D-170
OIL SUMP FILTER/OIL PRESSURE REGULATOR D-172
OIL PRESSURE SWITCH/OIL COOLER D-175
OIL FILTER D-177
OIL PRESSURE D-177
PISTON COOLING OIL JET/OIL NOZZLE D-177
ENGINE LUBRICATION DIAGRAM D-178
ENGINE LUBRICATION SYSTEM D-119

Downloaded from www.Manualslib.com manuals search engine

OIL PUMP

REMOVAL

To service the oil pump one must first separate the crankcase.
It is also necessary to remove and disassemble the engine. For further information, refer to the sections on engine removal and disassembly.

*** ENGINE REMOVAL ..... Refer to page D-4.**
*** ENGINE DISASSEMBLY ..... Refer to pages D-20 -35.**

REMOVAL

- Remove the oil pump fastening screw.
- Remove oil pump cover **1**.

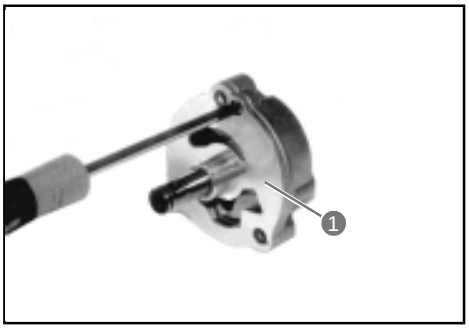

- Remove rotor shaft **2**, driving pin **3**, inner rotor **4** and outer rotor **5** from oil pump body **6**.

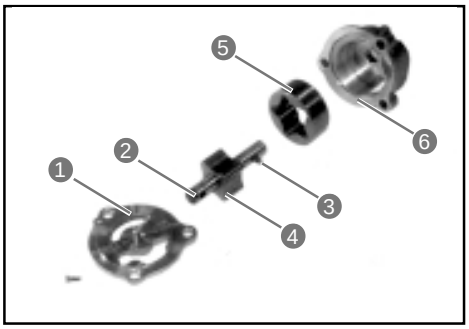

CHECK

Using a thickness gauge, check the clearance of the rotor tip and that of the outer rotor.
If the clearance exceeds the service limit, replace the oil pump with a new one.

Specific tool: Thickness gauge

Service limit
Rotor tip clearance: 0,20 mm (0.0079 in)
Outer rotor clearance: 0,35 mm (0.0138 in)

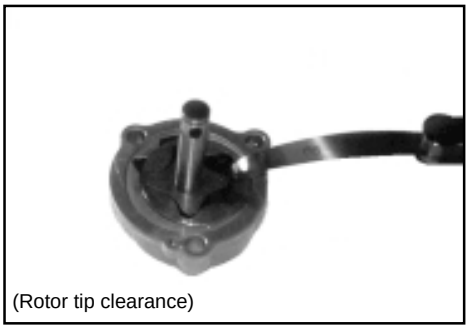
(Rotor tip clearance)

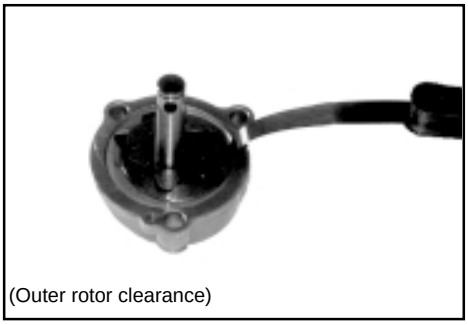
(Outer rotor clearance)

Downloaded from www.Manualslib.com manuals search engine

ASSEMBLY AND INSTALLATION

Wash the oil pump with clean engine oil before reassembly.

- Insert the rotor shaft into the inner rotor. Align driving pin **1** with slot A in the inner rotor.

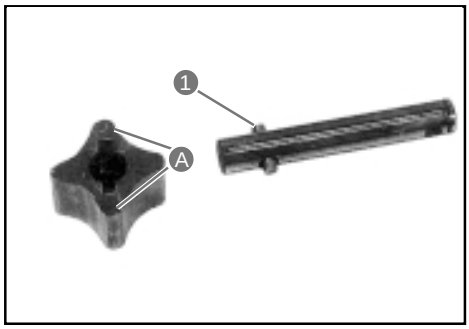

- Install the outer and inner rotors in the oil pump body.

*Punched mark **B** on the outer rotor must face the pump body and punched mark **C** on the inner rotor must face the pump cover.*

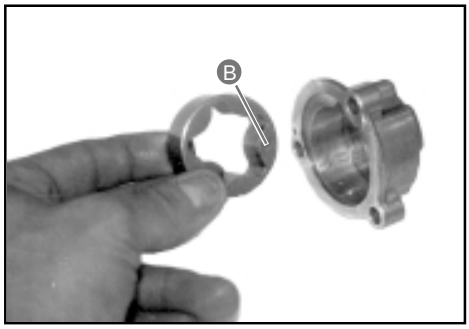

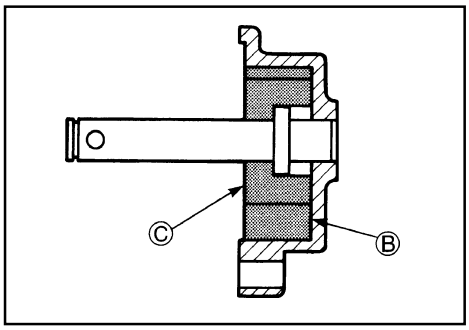

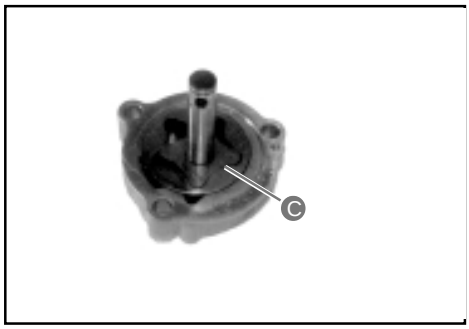

- Apply a small quantity of specific product to the screw, and then tighten it.

Specific product: LOC-TITE 243

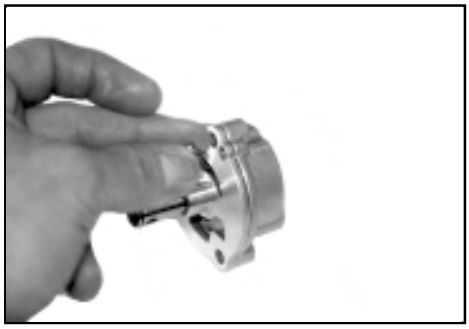

- Refer to the sections on engine assembly and installation for instructions on how to install the oil pump.

*** ENGINE ASSEMBLY ..... Refer to pages D-40/-80.**
*** ENGINE INSTALLATION ..... Refer to pages D-13/-19.**

Downloaded from www.Manualslib.com manuals search engine

OIL SUMP FILTER/OIL PRESSURE REGULATOR

REMOVAL

After draining the engine oil and the coolant, remove the components listed below in the order indicated

Refer to the pages indicated for details on how to perform each step.

Drain:
- The engine oil (see page B-16.)
- The engine coolant (see page B-19.)
- Remove the sump guard (see page B-7)

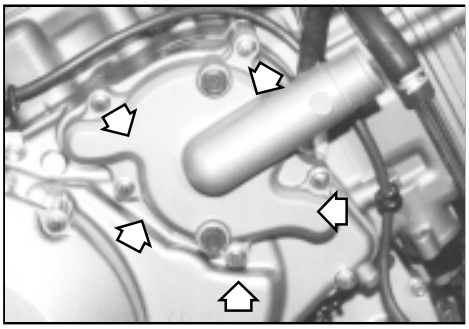

Remove:
- The water hose.
- The water pump (see page D-29).

- The dowel pin.
- The impeller (see page D-29).

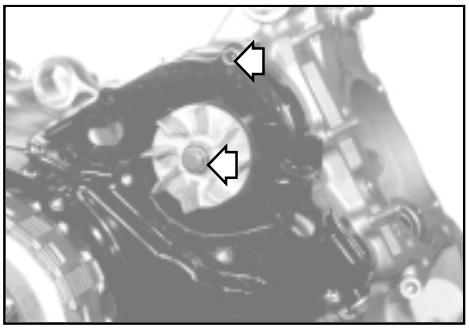

- The clutch cover (see page D-29).

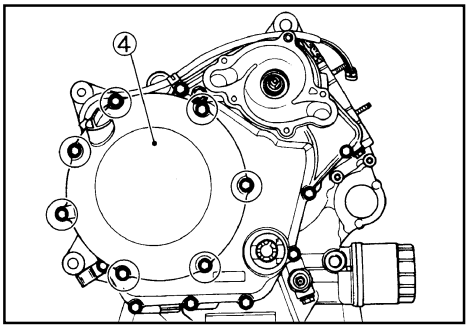

- The dowel pin.
- The gasket.

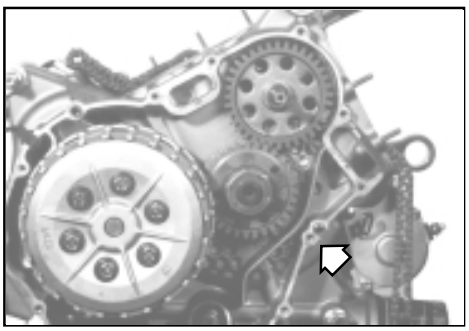

Downloaded from www.Manualslib.com manuals search engine

- The oil sump filter.

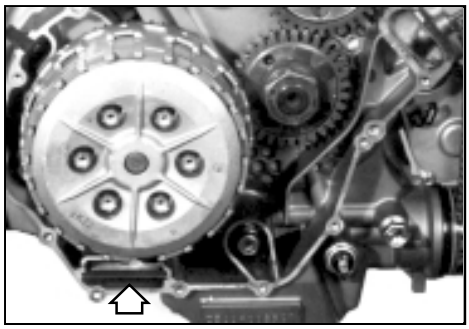

- The oil pressure regulator.

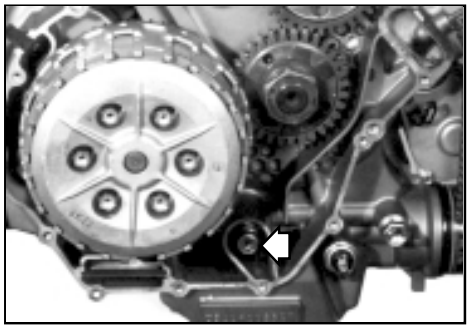

CHECKING THE OIL PRESSURE REGULATOR

Check the operation of the oil pressure regulator by pushing the piston with a suitable bar. If the piston does not work, replace the oil pressure regulator with a new one.



CLEANING THE OIL SUMP FILTER

Clean the oil sump filter with compressed air.

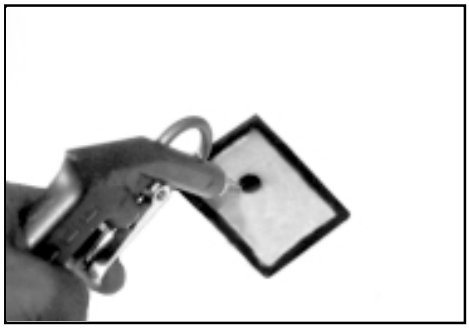

Downloaded from www.Manualslib.com manuals search engine

INSTALLING THE OIL SUMP FILTER

Installation is obtained by following the removing procedure in reverse order.

Refer to the pages indicated for details on how to perform each step.

Fit:

- The oil pressure regulator (see page D-51).

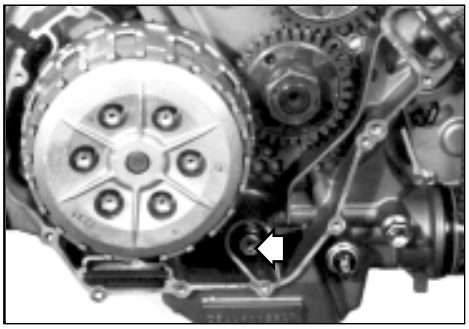

- The oil sump filter (see page D-51).

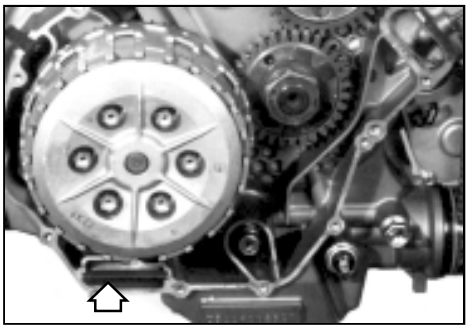

- The gasket.
- The dowel pin (see page D-55).

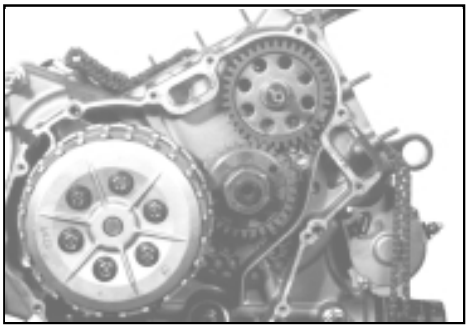

- Clutch cover **4** (see pages D-55 and D-56).

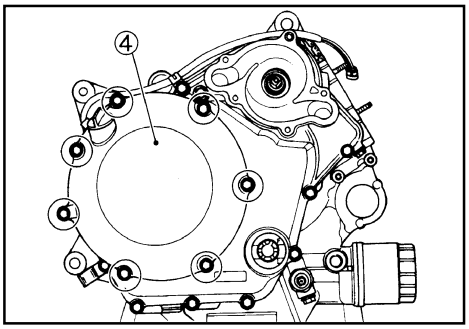

Downloaded from www.Manualslib.com manuals search engine

- The impeller (see page D-56).

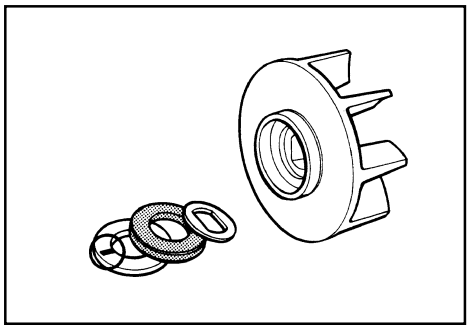

- The impeller fastening bolt (see page D-57).
- The dowel pin.

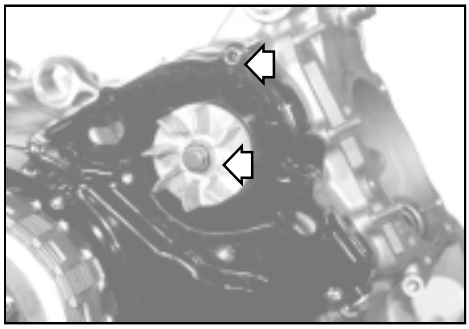

- The water pump casing (see pages D-57 and D-58).
- The water hose.

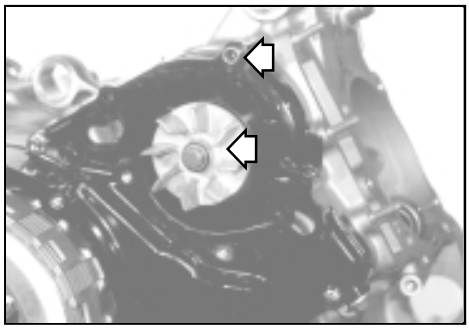

Adjust the following according to specifications:

	Page
* Engine coolant	B-19
* Engine oil	B-16

OIL PRESSURE SWITCH/OIL COOLER

REMOVAL

After draining the engine oil, remove the oil pressure switch and the oil cooler.

Refer to the page indicated below for details on how to drain the engine oil.

Drain:
- The engine oil (see page D-16).

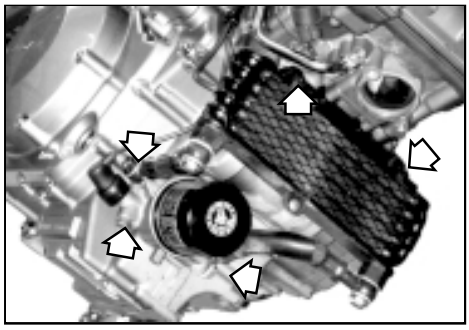

Remove:
- The oil pressure switch.
- The oil cooler.

Downloaded from www.Manualslib.com manuals search engine

CHECKING THE OIL PRESSURE SWITCH

Refer to section G.

CHECKING THE OIL COOLER PIPES

Check if the oil cooler pipes show any signs of damage or leakage.
If any defects are found, replace the oil cooler pipes with new ones.

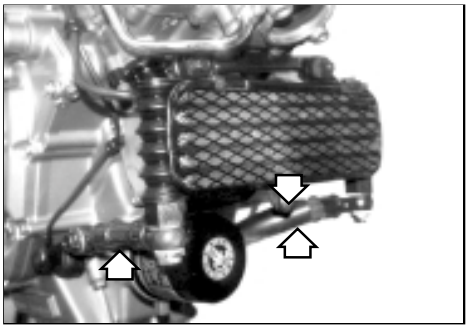

CHECKING AND CLEANING THE OIL COOLER

Using a compressed air jet, remove the dirt and dust from between the oil cooler fins.
Check if the cooler shows any signs of oil leakage. If any defects are found, replace the oil cooler with a new one.
If the cooler fins are bent or dented, straighten them with a small screwdriver.

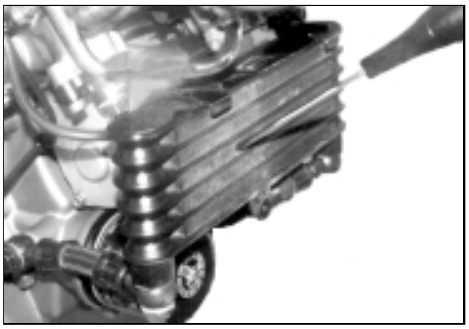

INSTALLATION

Installation is obtained by following the removing procedure in reverse order.

Refer to the pages indicated for details on how to perform each step.

Fit:

- The oil cooler (see page D-16).
- The oil pressure switch (see page D-45).

Adjust the following according to specifications:

Page

* Engine oil D-16

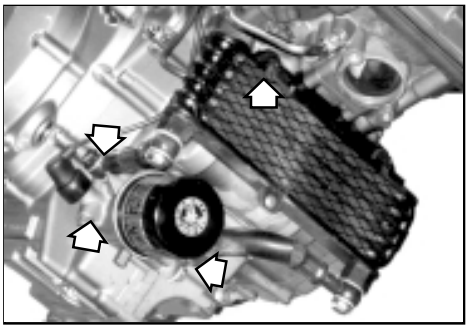

Downloaded from www.Manualslib.com manuals search engine

OIL FILTER
Refer to page B-17.

OIL PRESSURE
Refer to page B-28.

PISTON COOLING OIL JET/OIL NOZZLE
REMOVAL
The oil jet (for the transmission) can be removed after draining the oil from the engine.
The piston cooling oil nozzles and the oil jets (for each cylinder head) can be removed after removing each cylinder.

Installation is obtained by following the removing procedure in reverse order.

Refer to the pages indicated for details on how to perform each step.

Drain:
- Engine oil (see page B-16).

Remove:
- The oil jet.
- The cylinder.
- The oil jets (for each cylinder head) (see pages D-23 and D-27).
- The piston cooling oil nozzles (see page D-38).

INSTALLATION
Installation is obtained by following the removing procedure in reverse order.

Refer to the pages indicated for details on how to perform each step.

Fit:
- The piston cooling oil nozzles (see page D-41).
- The oil jets (for each cylinder head) (see page D-61).
- The cylinder.
- The oil jet (for the transmission) (see page D-41).

Adjust the following according to specifications:

	Page
* Engine oil	B-16

CHECK
Check if the piston cooling oil nozzles and the oil jets are clogged. If they are, clean them with a wire and a compressed air jet.

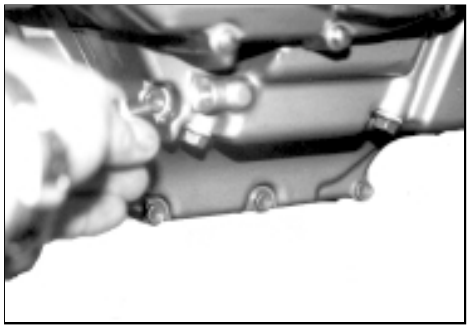

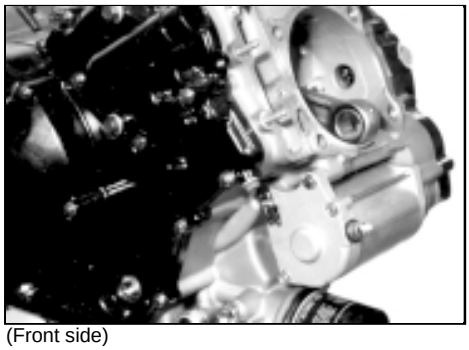

(Front side)

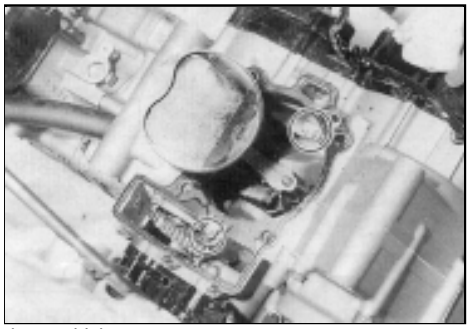

(Rear side)

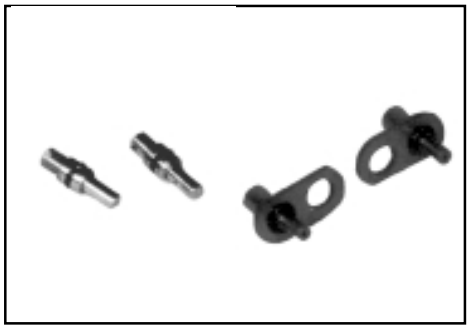

Downloaded from www.Manualslib.com manuals search engine

ENGINE LUBRICATION CHART

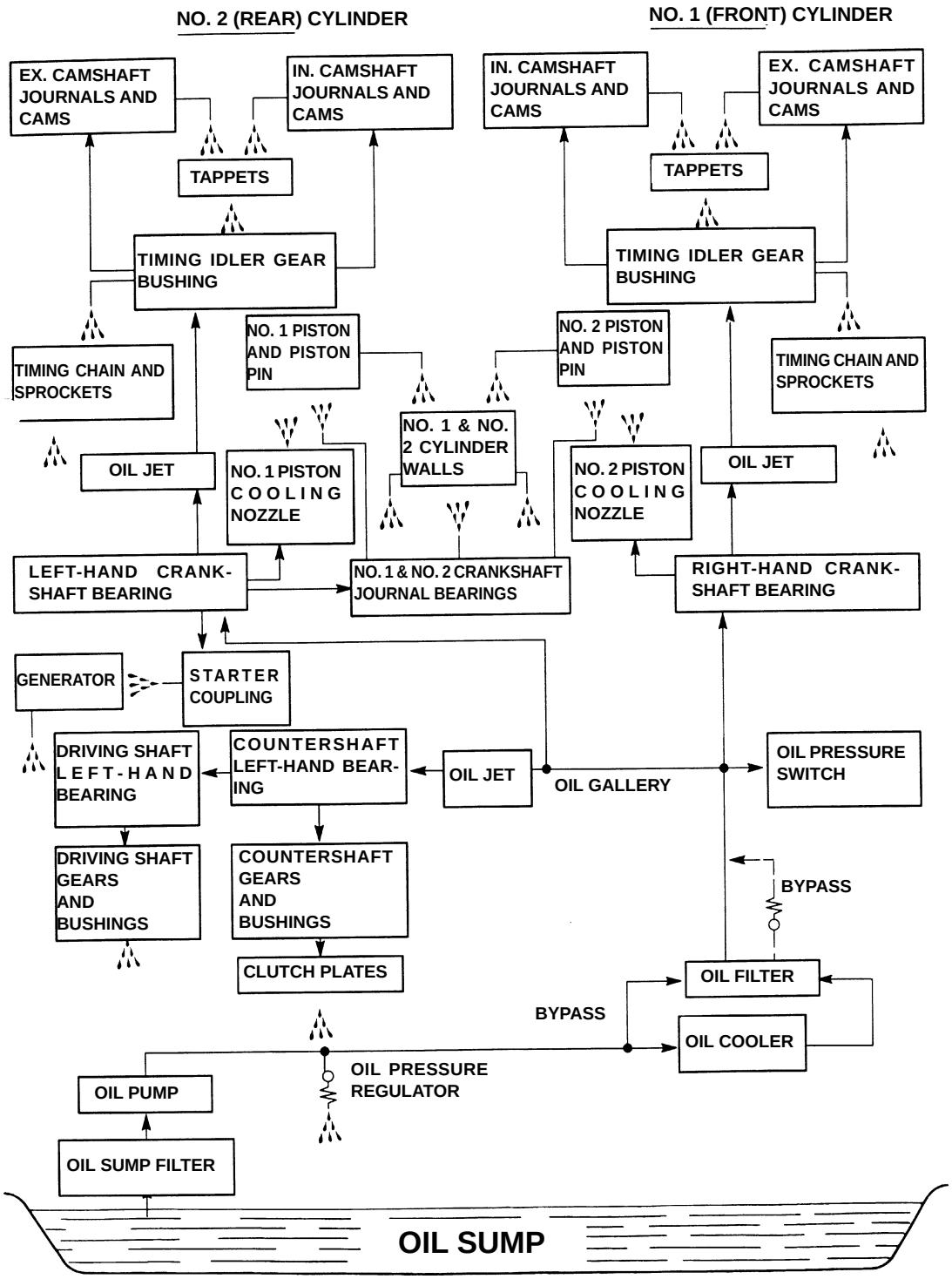

Downloaded from www.Manualslib.com manuals search engine

ENGINE LUBRICATION SYSTEM

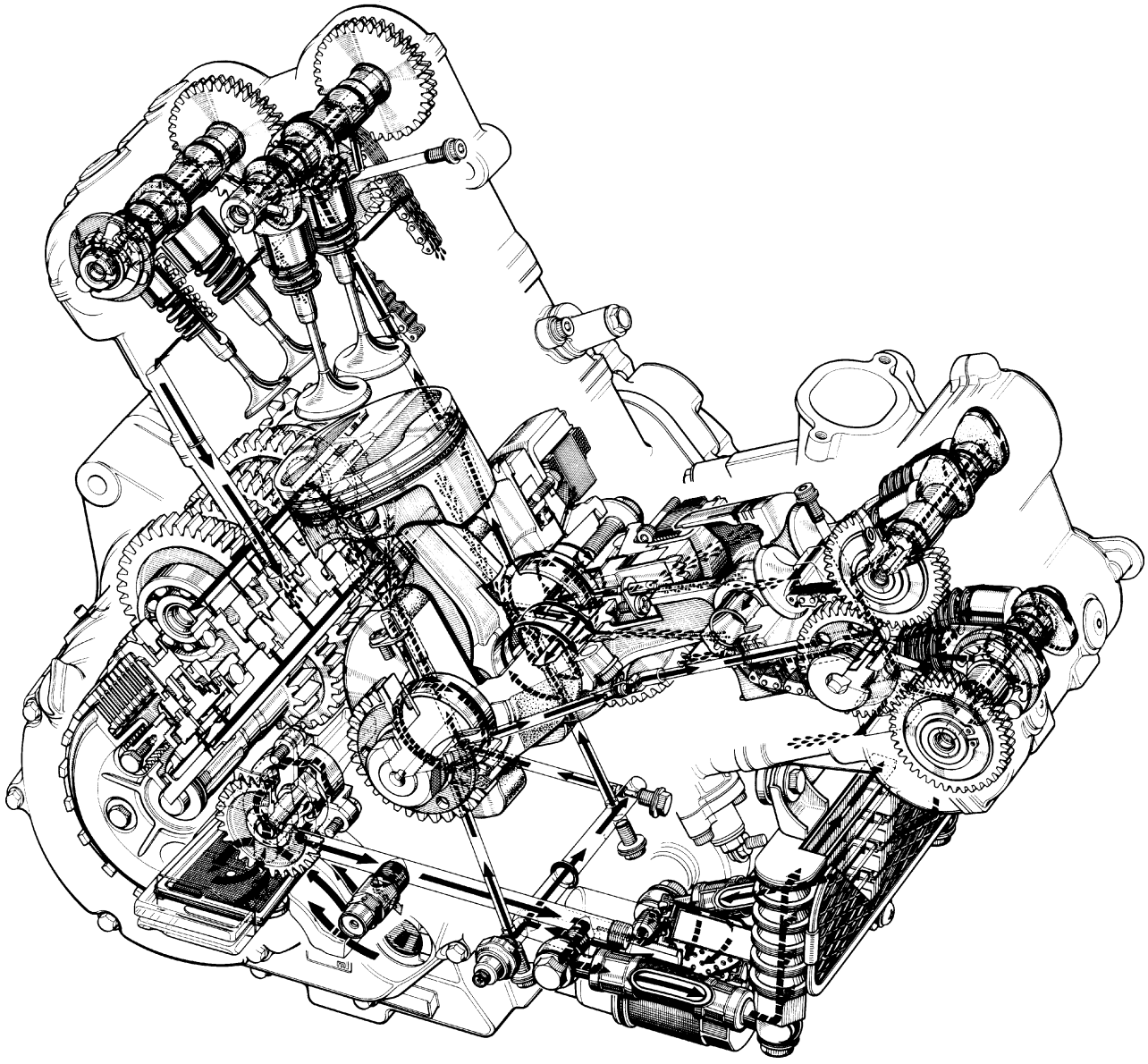

Downloaded from www.Manualslib.com manuals search engine

Downloaded from www.Manualslib.com manuals search engine

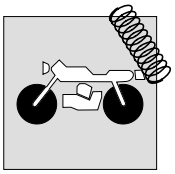

Section **E**

Downloaded from www.Manualslib.com manuals search engine

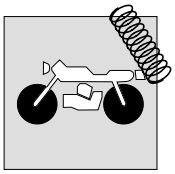

Front wheel E-3
Front suspension E-6
Rear wheel E-17
Rear suspension E-20
Frame E-24

Downloaded from www.Manualslib.com manuals search engine

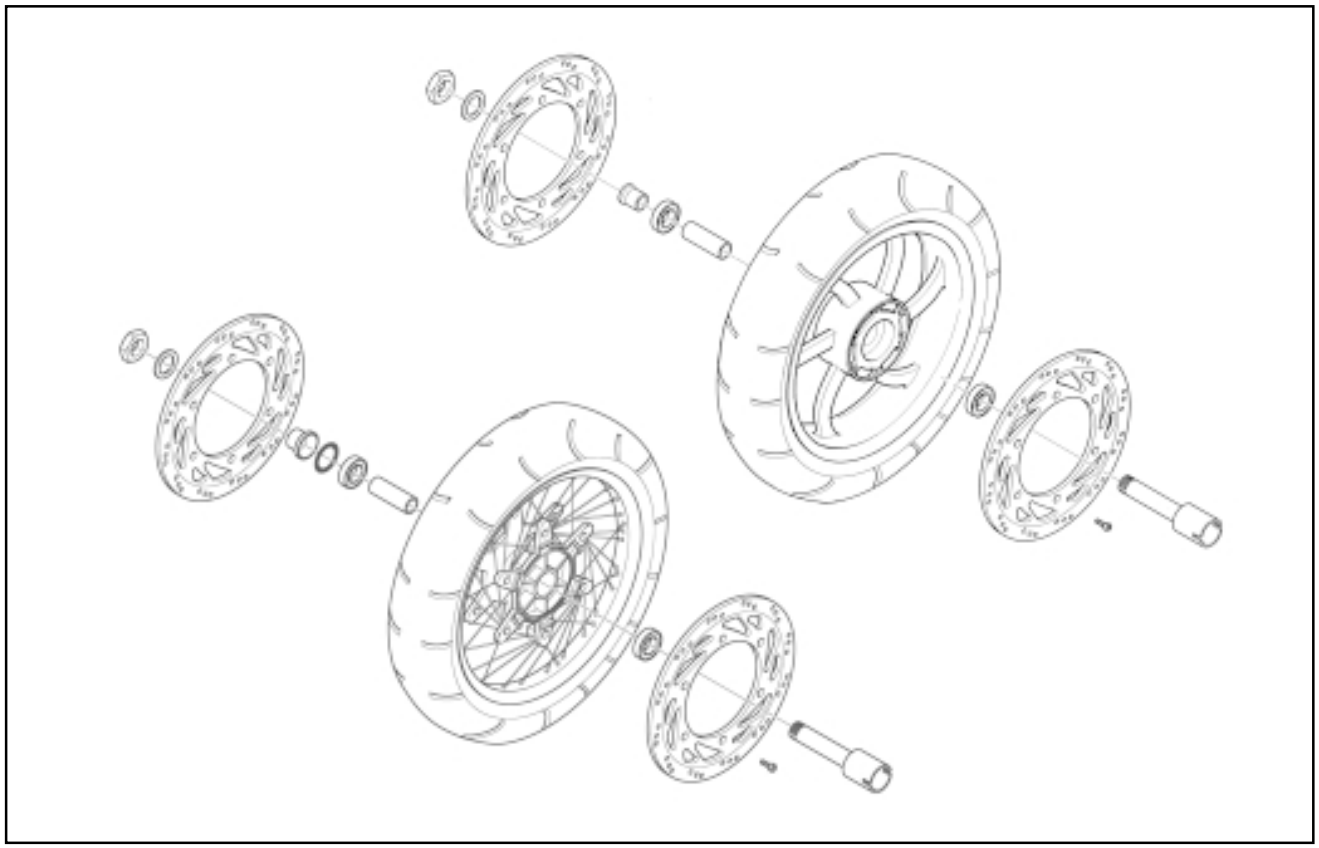

FRONT WHEEL

Light alloy wheel rim with traditional spokes ..... 3.00” x 18”
Six spoke alloy wheel rim ..... 3.00” x 18”
Tubeless tyre dimensions ..... 110/80-18”
Cold pressure (only rider) ..... Kg/cm^2 2.2-Psi 31.2
Cold pressure (+ passenger) ..... Kg/cm^2 2.4-Psi 34.1

FRONT WHEEL REMOVAL

Remove the sump guard and place a support underneath the engine so that the front wheel is raised from the ground. Proceed as follows:

- Remove the fixings of the brake pincers and remove the complete assembly as indicated in page F-8.
- Remove the nut **1** indicated in the figure and also the spacer.
- Slacken the four screws **2** that fix the wheel spindle to the fork legs.
- Slide out the spindle **3** and remove the wheel.

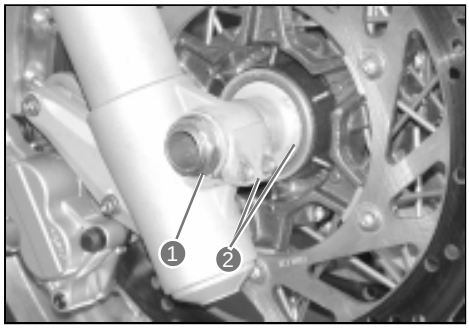

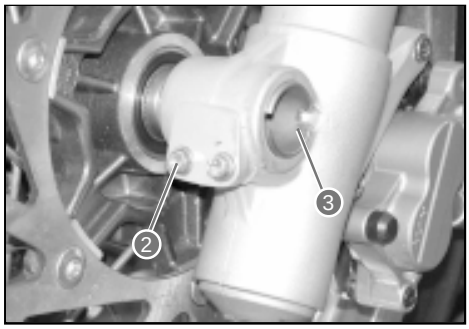

Do not activate the front brake lever during this operation. This would cause a partial closure of the pads with a consequent lowering of the brake fluid level.

Downloaded from www.Manualslib.com manuals search engine

FRONT WHEEL OVERHAUL

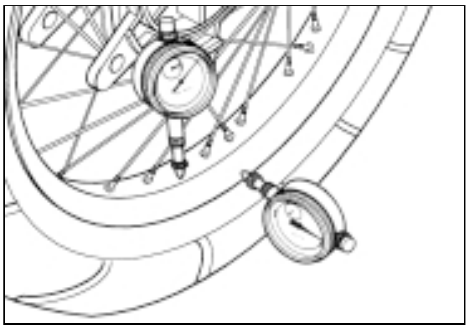

Carry out the radial and axial check on the wheel as shown in the figure. The maximum movement values for this check fall into the following categories:

Axial movement ..... 0.5 [mm]
Eccentricity ..... 0.8 [mm]

Bearing wear generally causes an excessive axial movement or eccentricity.
Substitute the bearings in this case and if the problem persists, substitute the wheel.

FRONT WHEEL BEARING SUBSTITUTION

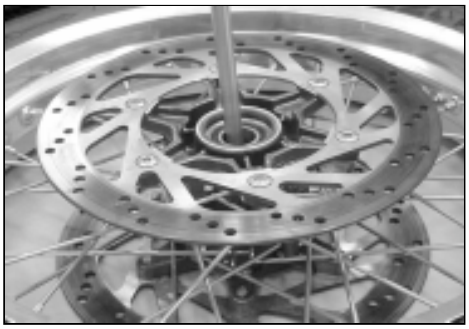

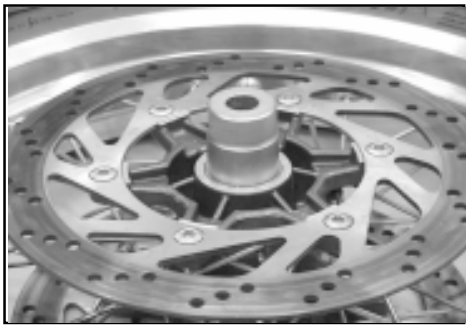

The substitution of the bearings must be carried out in the following way:

- Remove the washer on the right hand side of the machine.

Before starting this operation, it is advisable to remove the brake discs. (see Chapter F).

- Place the hub on an appropriate worktop surface with a hole through which the bearing can be removed.
- To extract the bearing from the hub, use a hammer and a cold chisel to hit the inner ring of the bearing only.
- Continuously move the cold chisel around the bearing to allow a balanced extraction.
- Slide out the spacer and proceed in the same way for the other bearing.

The removed bearings must be substituted.

When re-assembling the new ensure that the bearing seat is clean and free of grooves and scratches. Lubricate the seat then hammer the bearing into place utilising an appropriate metal tube that is the same diameter as the external ring of the bearing. Insert the spacer and proceed to insert the next bearing, repeating the operation described above.
Check the alignment of the bearings and introduce the wheel spindle.
Check the condition of the dust cap on wheels with traditional spokes. If worn or damaged, replace it.

After each intervention on the wheels it is advisable to balance them.

Downloaded from www.Manualslib.com manuals search engine

BENT WHEEL SPINDLE

Check the distortion of the axis of the wheel spindle using “V” supports and a comparator.
Maximum axis distortion ..... ≤ 0,25 [mm]

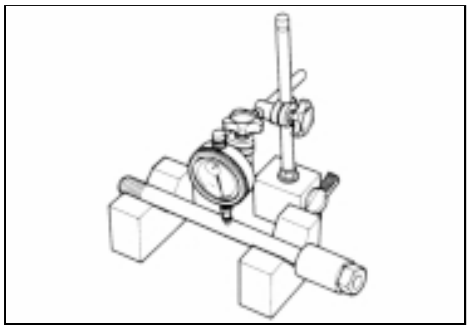

WHEEL ASSEMBLY

Replace the wheel, the wheel spindle and spacer on the right hand side of the machine in reverse order of removal. Take care to replace the wheel in the correct way with regards to the direction of the rotation of the wheel. Tighten the wheel spindle nut, countering the rotation of the spindle by the key as shown in the figure. Tighten the wheel spindle fixing screws to the correct torque pressure.
Front wheel spindle nut ..... 49÷53,9 [N·m]
Front wheel spindle fixing screws ..... 8,8÷8,9 [N·m]

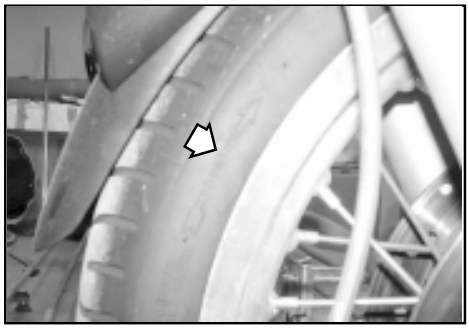

Assemble the brake pincers, tightening the screws to a torque pressure of ..... 23÷25 [N·m]

- Assemble the brake discs, tightening the screws to a torque pressure of 21.5÷23.5 [N·m]

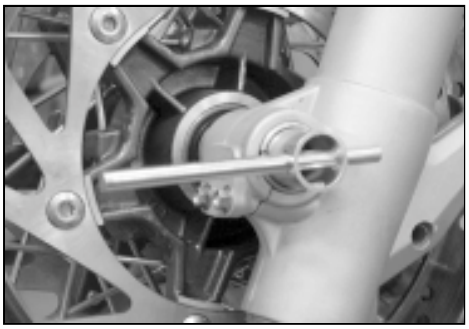

Check to see that there is no interference between the screws that fix the disc and the brake pincers.

Downloaded from www.Manualslib.com manuals search engine

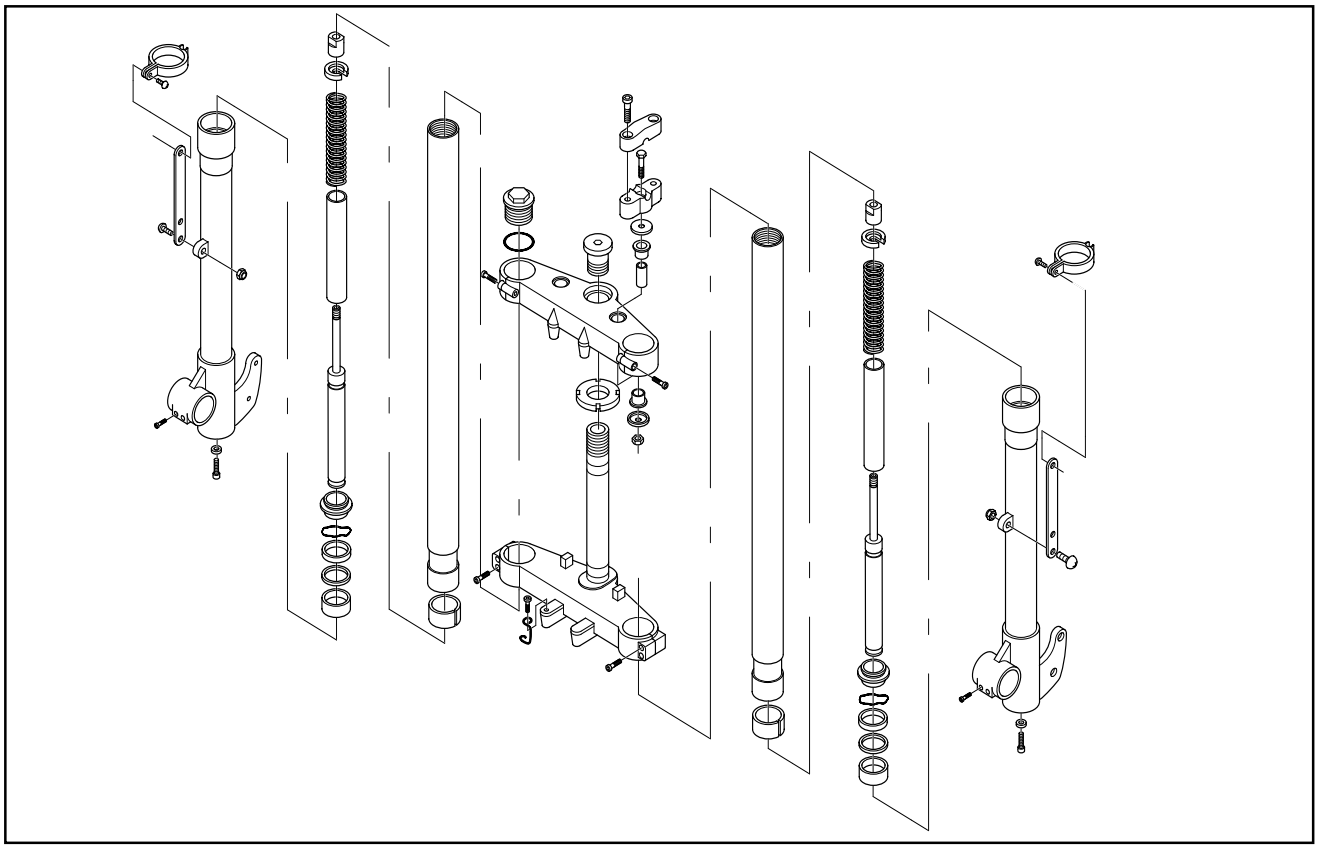

FRONT SUSPENSION

The front suspension consists of conventional advanced pivot telescopic hydraulic forks.

Fork leg diameter	Ø 43 [mm]
Front wheel travel	150 [mm]
Fork leg oil capacity	680 cc
Fork tube oil level	150 [mm]

FRONT FORK REMOVAL

- Raise the machine sufficiently enough to facilitate the removal of the fork assembly.
- Remove the front wheel as previously described (Page E-3).
- Unscrew the three screws **1** that hold the mudguard attachment **2** in place.
- Remove the front brake tubing from the fork assembly.

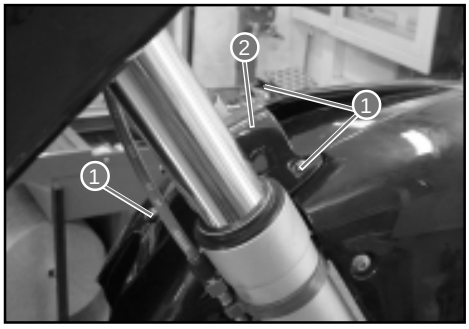

Downloaded from www.Manualslib.com manuals search engine

- Unscrew the four mudguard fixing screws **1**. Remove the mudguard.

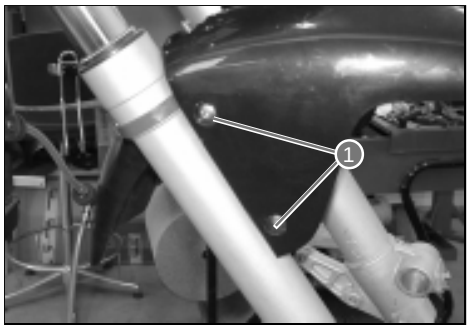

- Slacken the two fixing clamp screws **2** that fix the fork tubes to the steering head.
- Slacken the four fixing clamp screws **3** at the base of the steering.

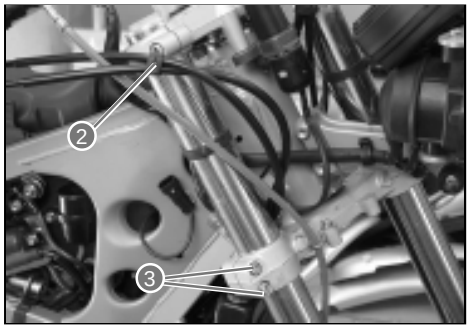

As a preventive measure, it is advisable to carry out this operation after having removed the fuel tank as described in page B-4.

FORK ASSEMBLY OVERHAUL

- Using a 30 mm spanner, unscrew the upper plug **4**.
- If necessary, hold the stem tight with a vice.

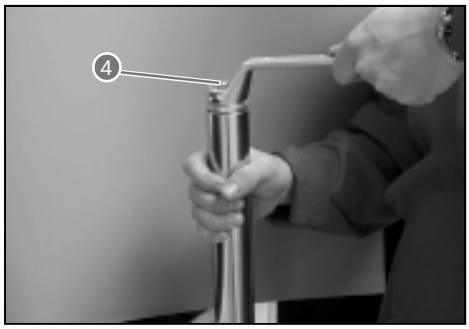

Take care to not ruin the chromed part of the stem.

- Push the spring down to allow enough space to insert a 19 mm spanner onto the locknut **5**.
- Unscrew the upper plug **4** with the 30 mm spanner as shown in the figure.

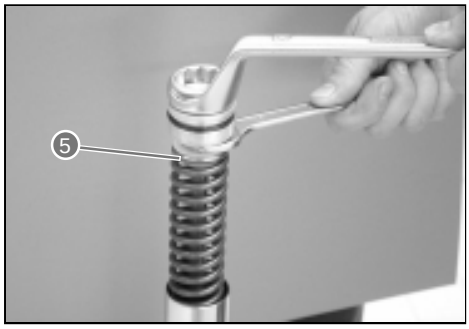

- Extract the spring.



Slide out the spring slowly to allow the oil to drip from the spring.

Downloaded from www.Manualslib.com manuals search engine

- Empty the used oil from the tube. Slide out the support spacer, moving the tube around so that it is removed more easily.

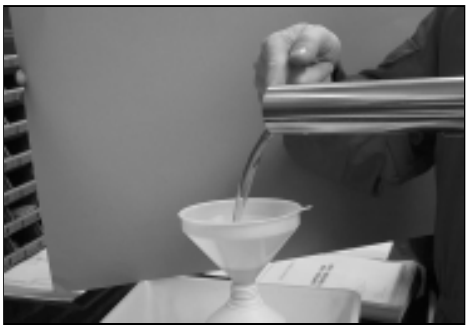

Dispose of the oil in the correct way.

- Remove the screw **1** placed at the base of each stem and slide out the cartridge **2**.

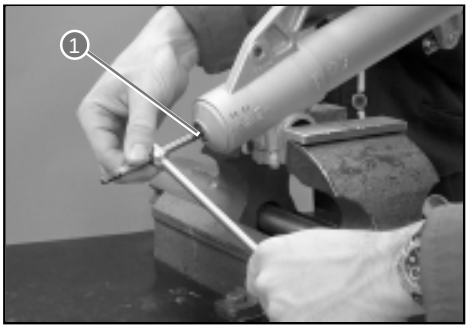

During this operation, protect the parts that are clamped in a vice with adequate protection.

- Move the cartridge around so that the oil is emptied from it.
- Check that the rod inside the cartridge slides up and down smoothly.

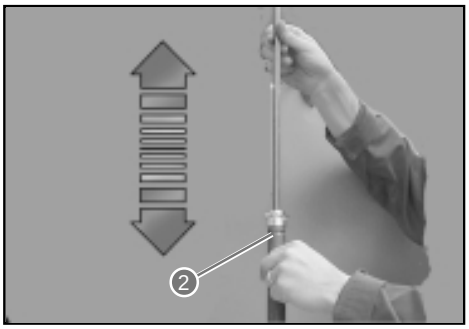

SUPPORT TUBE SLIDING ASSEMBLY REMOVAL

- Remove the dust protector **1** and the stop ring **2** underneath.

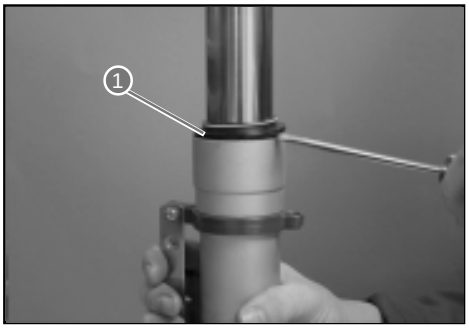

- Disassemble the sliding assembly from the support tube as shown in the figure.

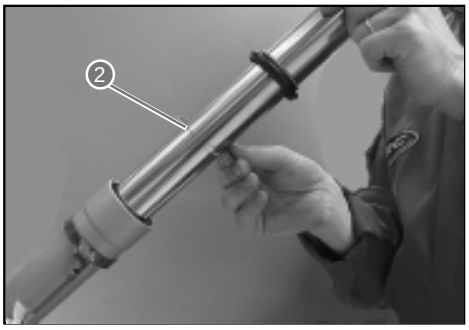

For normal cleaning, it is sufficient to carry out the previously described operations.

Downloaded from www.Manualslib.com manuals search engine

- To substitute fork oil seals, proceed as follows:

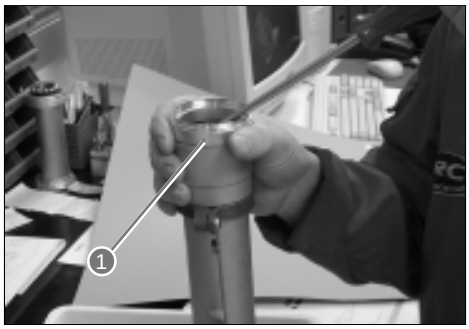

It is advisable to protect the edge of the sliding section with a special ring cap **1**, when extracting the sealing ring.

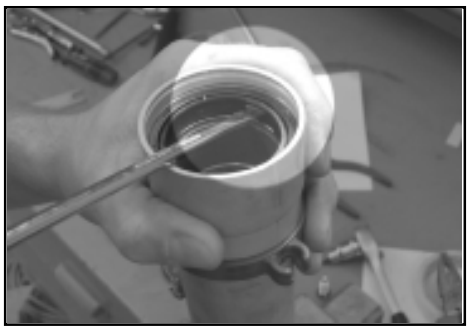

Using a wide screwdriver, exert pressure under the sealing ring and at the same time, rotate the sliding section to allow the sealing ring to slide out. Pull out the plate that is underneath the sealing ring.

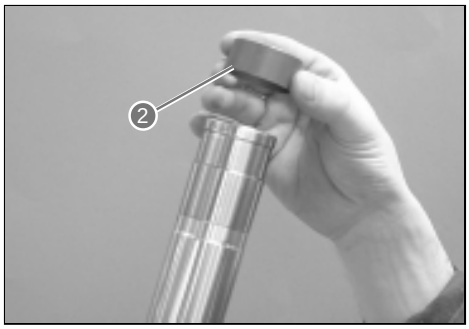

- Remove the bush **2** from the stem.

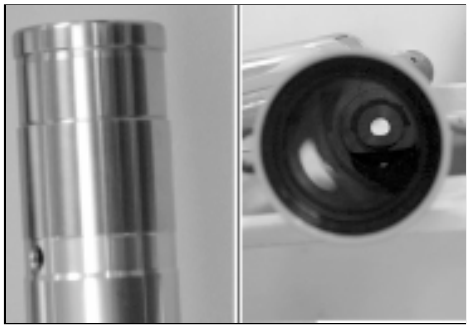

- Check that the internal surface of the sheath and external surface of the stem are in good condition.

The sliding bushes must not show signs of excessive wear or lines. Check that the oil seals and the dust seals do not show signs of cuts or cracking.

SUPPORT TUBE SLIDING ASSEMBLY – REASSEMBLY

It is advisable to use anti-wear bushes and new oil seals when reassembling the fork assembly.

- Proceed in the reverse order of removal for reassembly. Pay particular attention to cleaning the bush seats and to not damage the edges of the oil seal.

Downloaded from www.Manualslib.com manuals search engine

- Assemble the bush onto the stem.
- Insert the stem inside the sheath.



- Using the special tool, assemble in the following sequence, the bush, spacer and the oil seal as shown in the figure.
- Assemble the stop ring and the dust seal.



- Insert the assembled parts into the fork leg.
- Screw in the lower screw complete with washer. Tighten it to the correct torque.
  Lower fork screw: 50 (N·m)

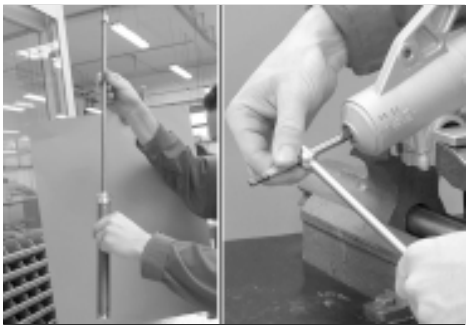

- Keep the fork in the vertical position (without the spring and the spacer).
- Compress them together completely.
- Pour in 680 cc of specified fork oil.



- Slowly pump several times the internal rod of the assembly, until there are no bubbles in the oil. There should be a continuous braking action in the fork movement.
- Move the stem upside down several times until there are no more bubbles.
- Keep the fork in a vertical position for several minutes.



Downloaded from www.Manualslib.com manuals search engine

* *Always keep the oil level above the upper extremity of the cartridge to avoid the possibility of air entering into the cartridge during this operation.*
* *Make sure that all air is bled from the system.*

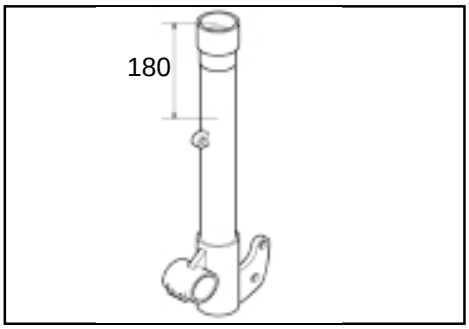

- Keep the fork in a vertical position and regulate the oil level to the height of 180 mm as shown in the figure (with rod and stem completely compressed).

- Screw in completely the nut on the pumping rod.
- Assemble the spring spacer.
- Lift up the pumping rod and maintain the fork at an angle. Assemble the spring.



Make sure that the nylon bushes on the ends of the spring are in place.

- Compress the spring, pull out the pumping rod and insert the 19 mm spanner onto the nut, as shown in the figure.



- Check the condition of the O-ring on the fork plug. If it is damaged, substitute it.
- Assemble the pumping rod plug as shown in the figure. Tighten to the correct torque.



- Seal the fork by tightening the support tube plug to the correct torque.

Thoroughly grease the stem with the right product.



Downloaded from www.Manualslib.com manuals search engine

FORK ASSEMBLY – REASSEMBLY

- Proceed with the reassembly of the fork assembly in the reverse order of removal.
- Position the fork tubes to 33.5 mm, as indicated in the figure.
- Tighten the four screws at the base of the steering and the two screws at the steering head to a torque of 22.5 ÷ 24.5 N·m.
- Assemble the mudguard and the mudguard attachment.
- Proceed with the reassembly of the wheel as described in page E-5.



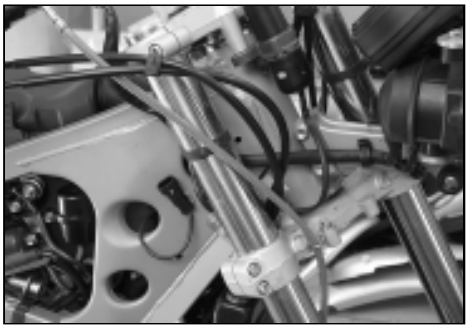

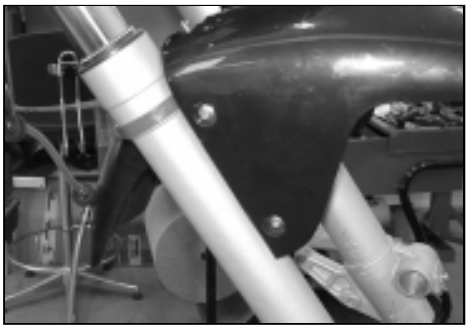

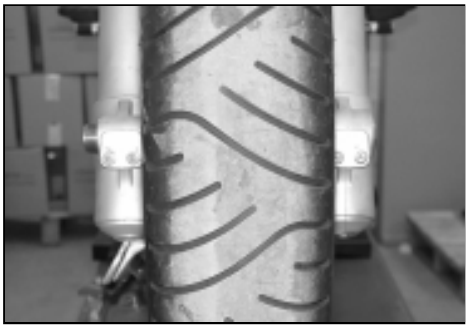

Downloaded from www.Manualslib.com manuals search engine

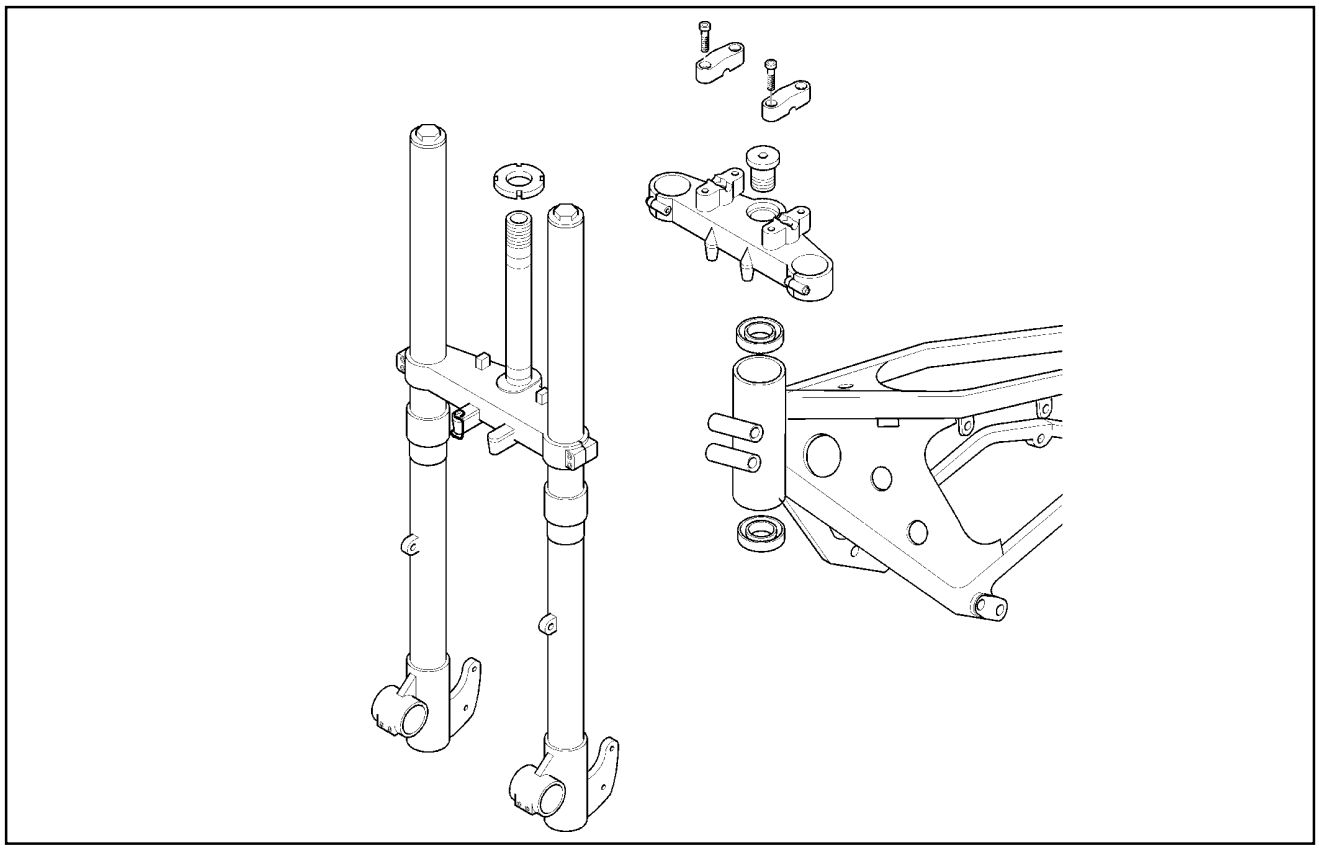

STEERING REMOVAL

Carry out the following procedure to remove the steering assembly from the frame:

- Remove the fuel tank as described in page B-4.
- Remove the front wheel, the mudguard and the fork legs as previously described.

HANDLEBAR REMOVAL

- To remove the handlebars from the steering and to substitute the handlebars, it is necessary to remove the rear view mirrors, the right hand **1** and left hand **2** electrical components assembly, the clutch **3** lever assembly and the front brake lever assembly **4**. For the electrical components assembly, unscrew the lower screws **5**. For the clutch lever assembly, and the front brake lever assembly, unscrew the four screws **6**.

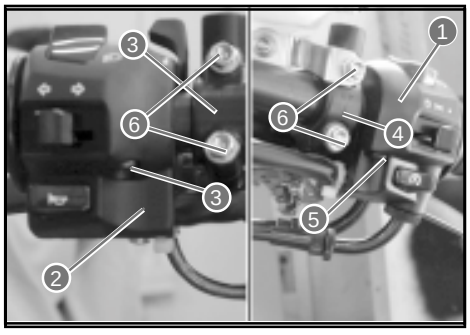

Downloaded from www.Manualslib.com manuals search engine

- If the handlebars have to be substituted, it will be necessary to remove the left hand and right hand counterweights by unscrewing the two screws **7**.
- To reassemble the handlebar assembly, follow the instructions for removal in reverse order.

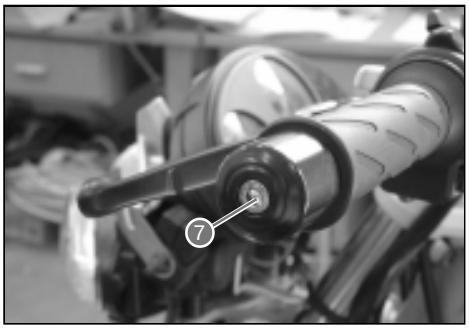

*If the handlebars must be removed from the steering only for the removal of the steering, then the above operation does not need to be carried out. Remove the four steering fixing screws **8**, remove the cables **9** and push the complete assembly to the front part of the machine.*

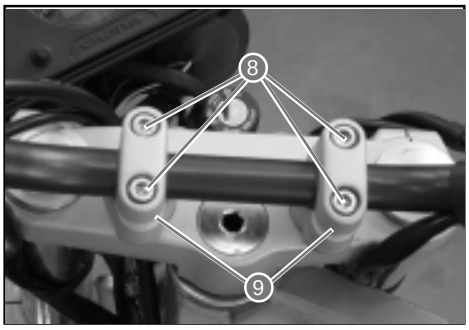

*To substitute the handlebar supports after having removed the handlebars, remove the two nuts **10** as indicated in the figure.*



Downloaded from www.Manualslib.com manuals search engine

- Remove the screw from the steering spindle **1**.
- Slacken the screws **2** on the steering head fixing to the fork tubes.
- Remove the connector of the ignition switch assembly. Lift up the steering head and remove it.

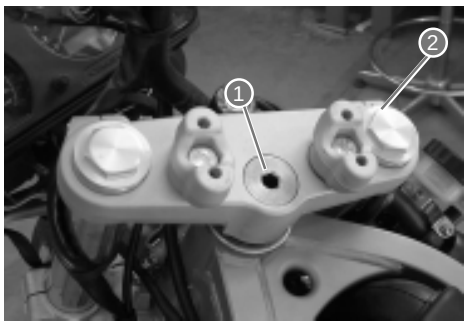

- Remove the screw of the front brake tubing support.
- Using a ring spanner of the correct size, unscrew the fixing ring nut **3** of the steering spindle. Remove the dust cap **4** (if it is not integrated with the ring nut) and the bearing underneath. Pull out the steering base from the steering head housing.

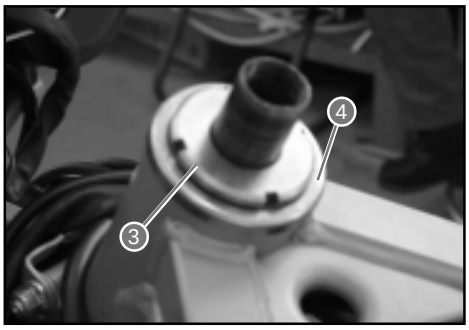

- Check the condition of the various parts removed. If necessary, substitute the steering bearings. Remove the bearing seats using a mallet and a drift as shown in the figure.



When removing the bearing seats, work around the external ring of the bearings so that a straight and uniform removal is achieved.

- Remove the lower bearing **5** from the steering spindle using a flat cold chisel.

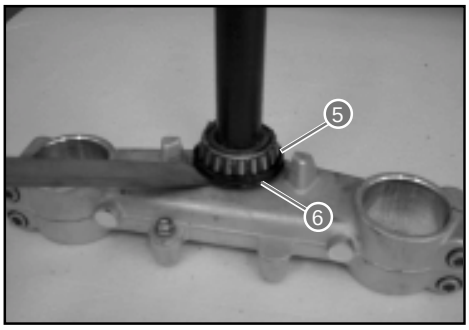

During this operation, take care to not damage the spacer ring 6.

Downloaded from www.Manualslib.com manuals search engine

- Accurately clean the various seats, the external part of the steering tube and the internal part of the steering head housing.
- Assemble the new bearing on the steering tube by using a tube of the correct diameter placed against the external ring of the bearing. See the figure.
- Proceed in the same way for the lower roller bearing.

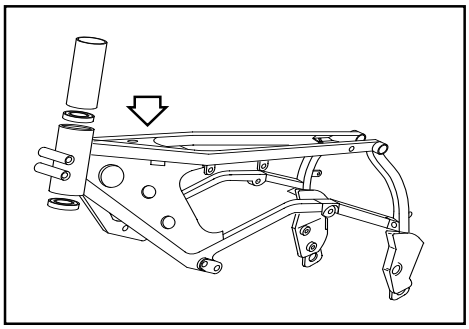

- Assemble the bearing on the steering head housing by using the appropriate tube to press down on the external diameter of the seat as shown in the figure. Grease well, supporting the unit on an appropriate work surface.

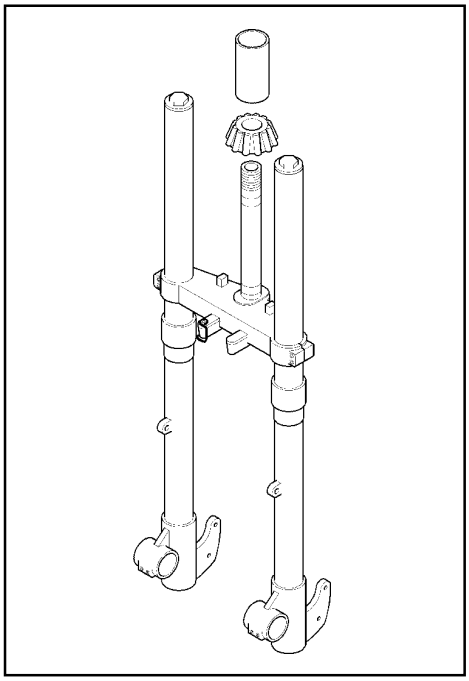

It is recommended to carry out this operation placing the steering base (in relation to the spindle) on an adequate surface.

STEERING REASSEMBLY

- After checking that the various steering components are not damaged or worn, reassemble every part in the reverse order of removal.
- Tighten the steering tube fixing ring nut **1**.
- Turn the base of the steering several times so that the roller bearings settle into their seats.
- Slacken by a 1/4-1/2 of a turn the ring nut **1**.
- Insert the fork tubes, lightly tightening the relative screws on the steering assembly so that the steering head and steering base are aligned.
- Assemble the other components. Tighten the steering spindle screws **2** to the torque pressure of 60-65 N.m. Apply LOCTITE 243.
- Replace the handlebars, the handlebar clamp and the four fixing screws.
- After having adjusted the handlebar position, tighten the four screws **3** to the specified torque of 5-7 N.m.
- Assemble the fork tubes assembly (see pages E-11 and E-12).

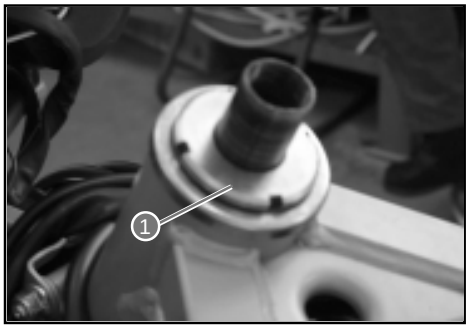

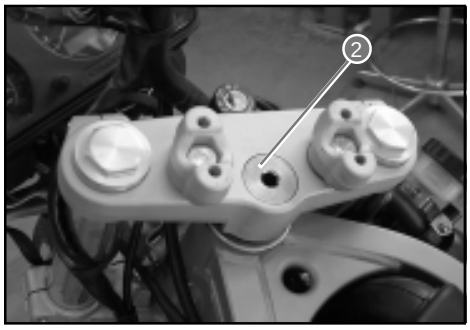

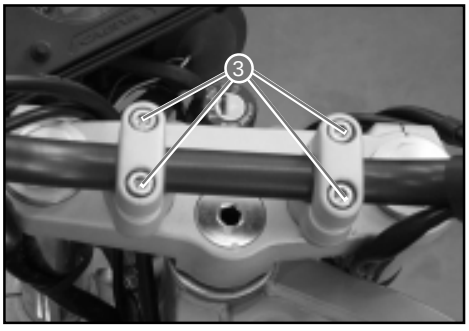

Downloaded from www.Manualslib.com manuals search engine

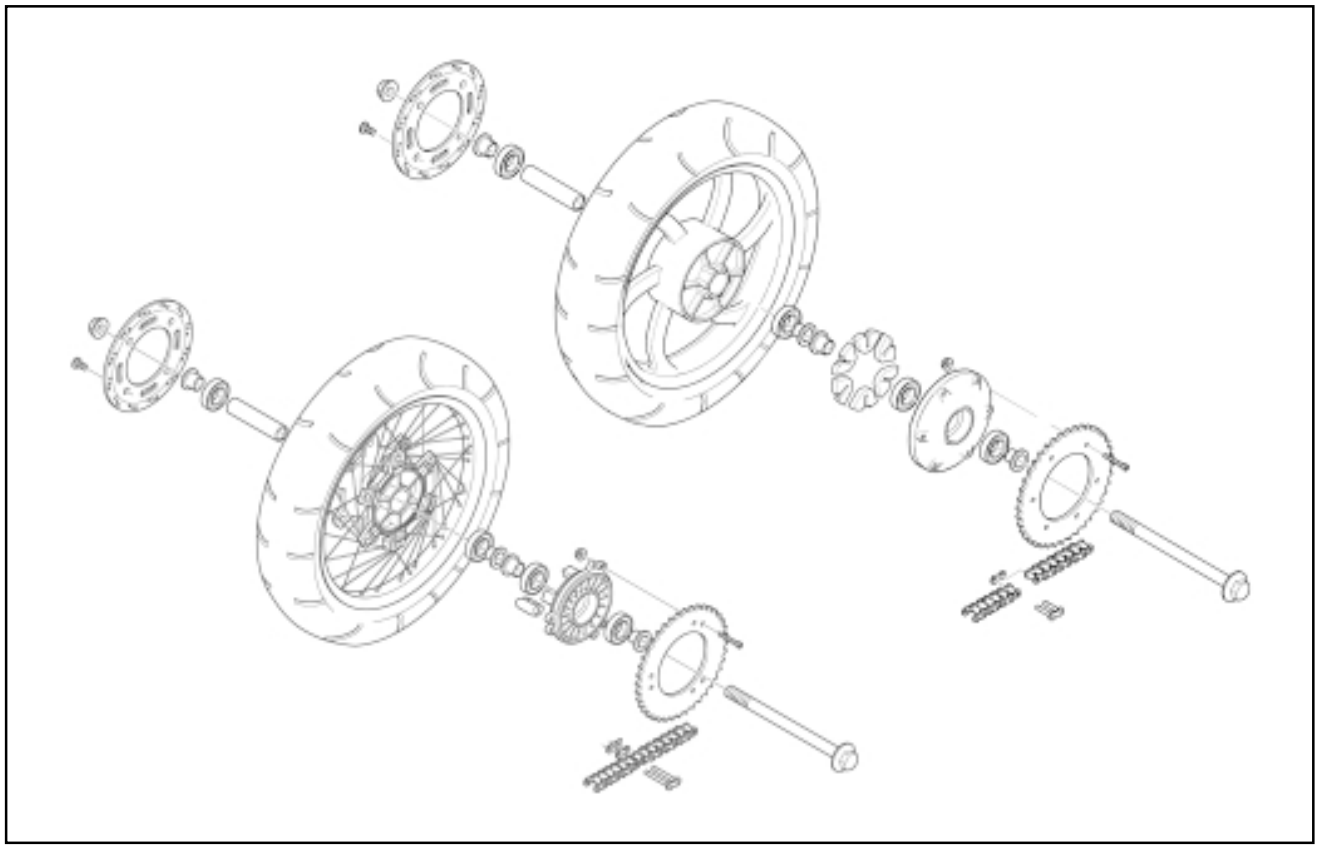

REAR WHEEL

Light alloy wheel rim with traditional spokes (with flexible joints) ..... 4.25”x17”
Six spoke alloy wheel rim (with flexible joints) ..... 4.25”x17”
Tubeless tyre dimensions ..... 150/70-17”
Cold pressure (only rider) ..... Kg/cm^2 2.4-Psi 34.1
Cold pressure (+ passenger) ..... Kg/cm^2 2.6-Psi 36.9

REAR WHEEL REMOVAL

- Before removing the rear wheel for the hub assembly overhaul, it is advisable to remove the spray guard by unscrewing the four screws **1**.

Place a support underneath the engine so that the rear wheel is raised up from the ground. Proceed as follows:

- Slacken the wheel spindle nut **2.**
- Slacken the screws **3** of the chain tensioner. Remove the nut **2** and slide out the wheel spindle **4** from the opposite side.
- Push the wheel forward and remove the chain from the crown wheel.
- Slide the wheel out from the fork paying attention to the pincer plate support that is now floating free from its fixing.
- Remove the spacers from the each side of the wheel. If necessary, slide out the complete flange of flexible joints and crown wheel from the rear hub.

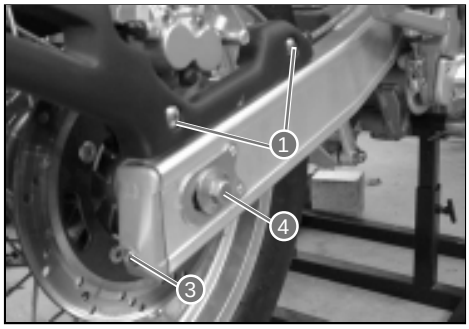

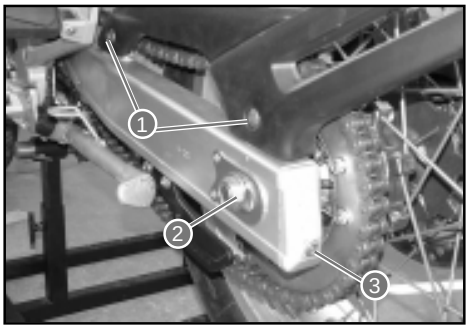

Downloaded from www.Manualslib.com manuals search engine

REAR WHEEL OVERHAUL

Proceed as follows for the wheel bearing and flange substitution, the wheel rim check and the wheel spindle for deformation check.

- Check the bearings and the flexible joints for wear. If necessary, substitute them.

When reassembling the rear wheel, it is necessary to check the chain tension and the wheel alignment by adjusting the index adjusters **1** on both sides of the fork.

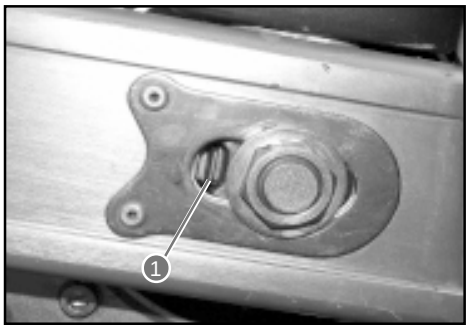

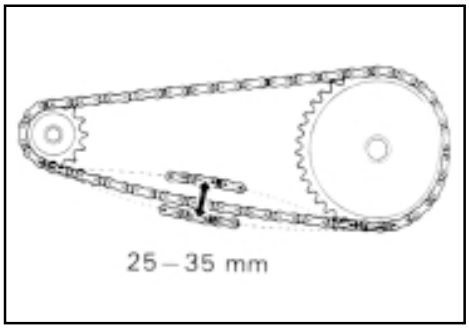

CHAIN, CROWN WHEEL AND PINION WHEEL OVERHAUL

The figure demonstrates the teeth profile of the crown wheel and the pinion wheel under normal conditions and under conditions of excessive wear.

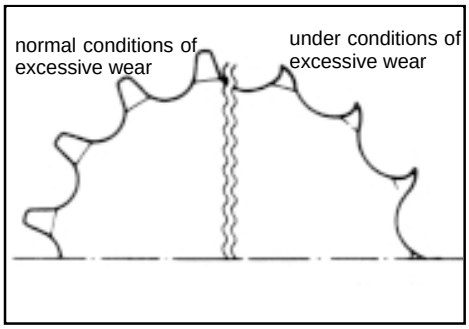

If excessive wear is noted, substitute the various components.

CROWN WHEEL SUBSTITUTION

After having removed the rear wheel, remove the crown wheel support flange.
As indicated in the figure, keep the screws **2** steady. Slacken the relative flange nuts.
When reassembling, apply a little LOCTITE 243 to the thread of the screws. Use new nuts and tighten them to the torque pressure of 22.5-24.5 N.m

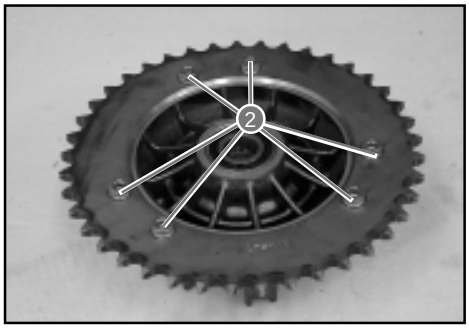

When substituting the crown wheel, always substitute the pinion wheel and the transmission chain.

Downloaded from www.Manualslib.com manuals search engine

SUBSTITUTION OF THE CHAIN

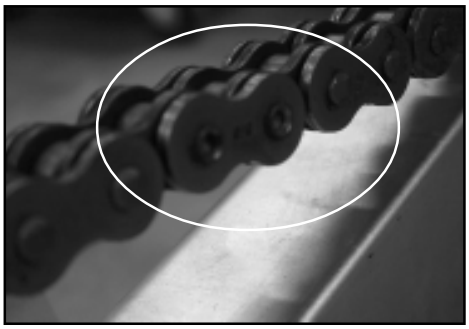

- Open the chain using the appropriate tool on the chain removal link that can be seen from the inside of the fork. It has two rollers closed in a different way from the other links. See figure.

To reassemble, carry out the phases of assembly in reverse order.

Check the chain as described in the maintenance chapter.

PINION WHEEL SUBSTITUTION

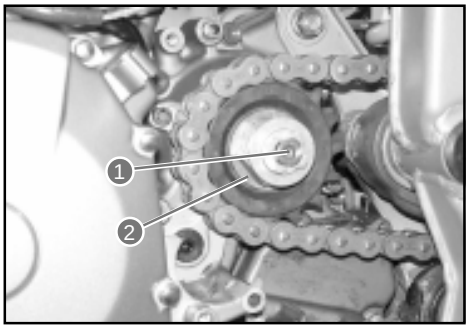

- Remove the pinion wheel cover as described in the maintenance chapter.
- Remove the screw **1** and the speed sensor rotor **2**.
- Remove the pinion wheel nut and the pinion wheel.

To reassemble, proceed in the reverse order to removal. Tighten the pinion wheel nut to the correct torque of 115 [N·m].

Downloaded from www.Manualslib.com manuals search engine

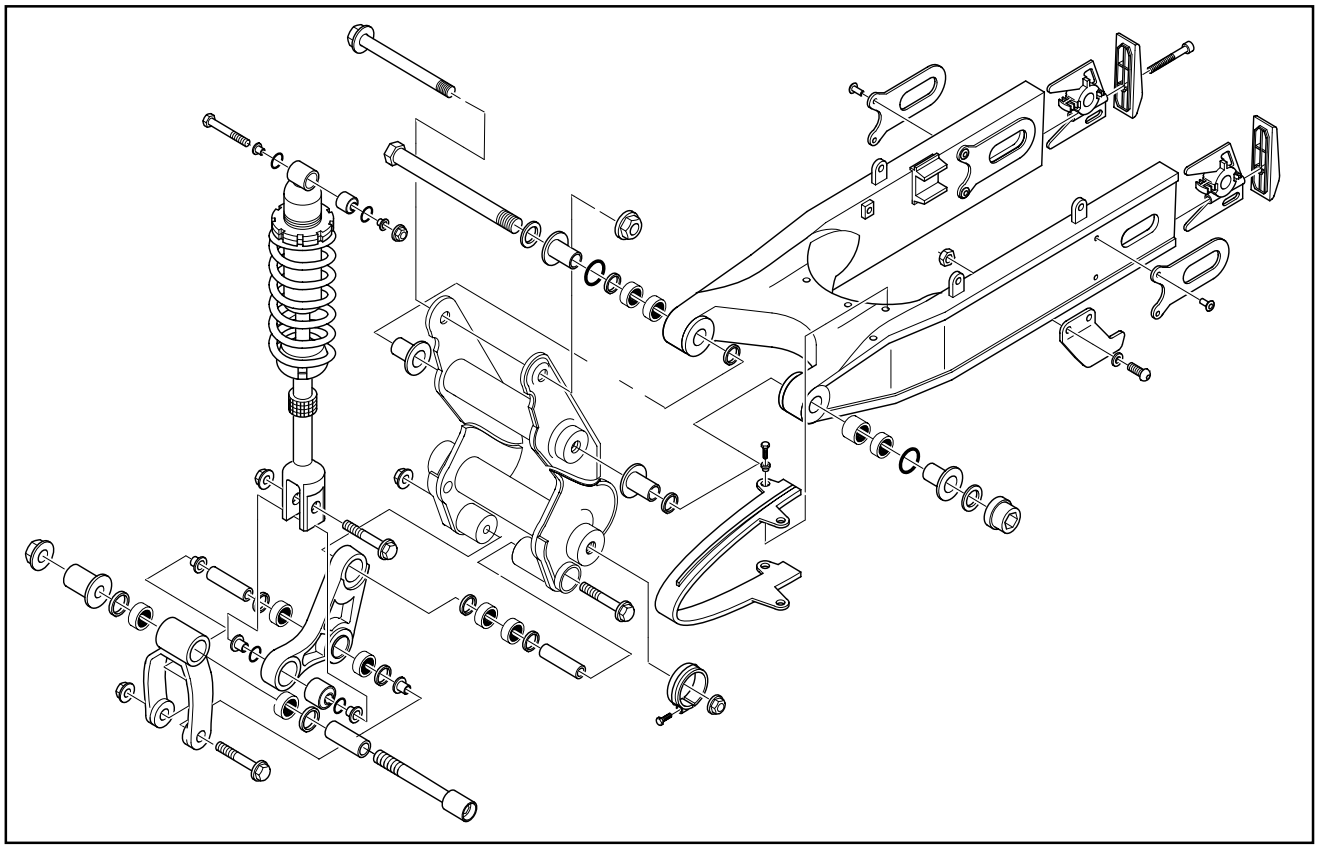

REAR SUSPENSION

REAR SHOCK ABSORBER REMOVAL

If the rear shock absorber is leaking liquid or damaged, substitute it as follows:

- Remove the under seat compartment, the right and left hand side covers situated under the seat as described in the maintenance chapter.
- Place a support underneath the frame so that the rear wheel is raised from the ground.
- Unscrew the upper fixing nut **1** of the shock absorber from the left hand side of the machine (as indicated in the figure). Slide out the bolt from the opposite side.
- Remove the two nut and bolt fixings **2** and **3** as indicated in the figure.
- Remove the shock absorber.

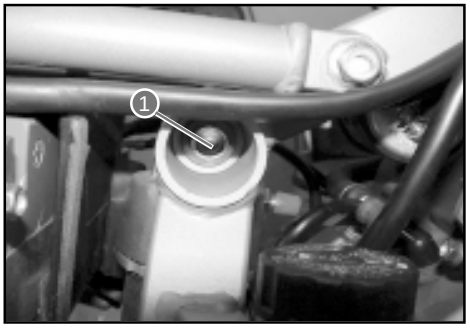

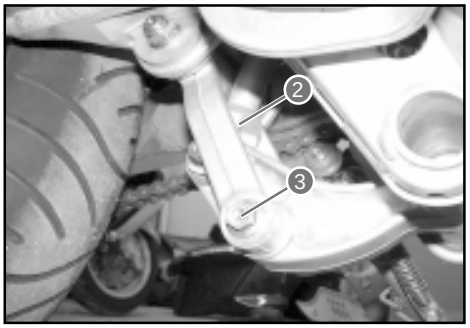

GENERAL CHECK OF THE SHOCK ABSORBER

Carry out the following checks:

- Check the condition of the shock absorber stem. It must not be damaged or distorted. If so, substitute the shock absorber.
- Check for oil leaks. If leakage is considerable, substitute the shock absorber.
- Compress the shock absorber. If the extension or compression travel is too slack, it means that the internal parts are worn. Substitute the shock absorber.
- Check the condition of the round bolthole seats. If there is excessive play, substitute them.

Downloaded from www.Manualslib.com manuals search engine

The shock absorber contains pressurised gas and must not be opened for any reason.

When reassembling, follow the removal procedure in reverse order. Tighten the three nuts **1**, **2** and **3** to the torque pressure of 39,2÷44,1 N·m.

PRE-LOAD SPRING ADJUSTMENT

After reinstalling the rear shock absorber, adjust the length as indicated in the figure:

- Slacken the upper ring nut **1.**
- Screw or unscrew the ring nut **2** until the standard length is reached.

Standard length: 180 [mm].

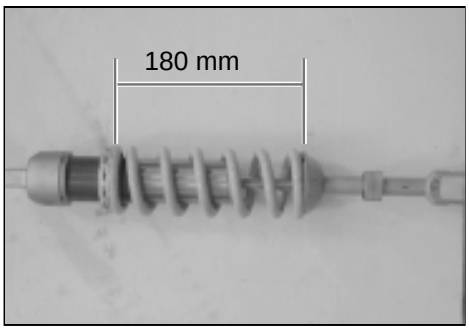

SHOCK ABSORBER HYDRAULIC BRAKE SETTING

EXTENSION – standard calibration: 20 clicks from the closed position (adjuster completely screwed in).
There are 34 positions available of the lower adjuster
1. To obtain reduced braking in respect of the standard position (softer suspension), unscrew the adjuster 1 (maximum of 14 clicks). To obtain greater braking in respect of the standard position (harder suspension), screw in the adjuster 1 (maximum of 20 clicks).
To restore the standard calibration, completely screw in the adjuster 1 and unscrew 20 clicks.

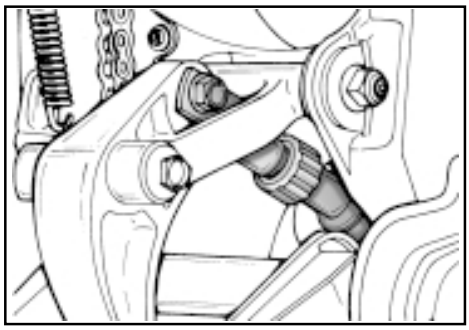

The standard calibration is optimum for use with rider and passenger and under normal road conditions.
Different calibrations are for personal riding needs and as well as load conditions and road conditions.

REMOVAL/CHECK OF THE REAR WHEEL COMPENSATOR ASSEMBLY

- If excessive play is found in the compensator assembly, the cause will be found in the internal components - bushes, bush seats and others. Proceed as follows:
- Remove the lower shock absorber fixing nuts as described in the preceding paragraphs.

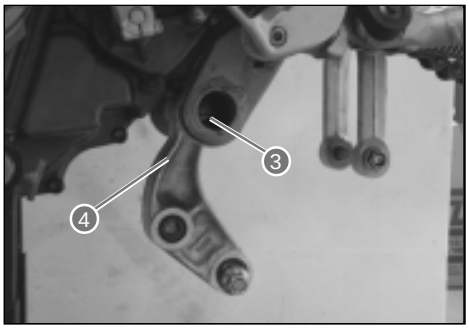

- Remove the nut **3** as shown in the figure, extract the spindle from the opposite side. Remove the compensator assembly 4.

Downloaded from www.Manualslib.com manuals search engine

To remove the connection rod of the rear suspension, it is necessary to remove the following components:
- Remove the chain roller **1**.

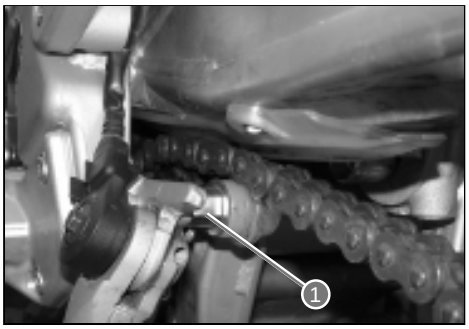

- Unscrew the two chain guide fixing screws **2** indicated in the figure.
- Push down the chain guide **3**.

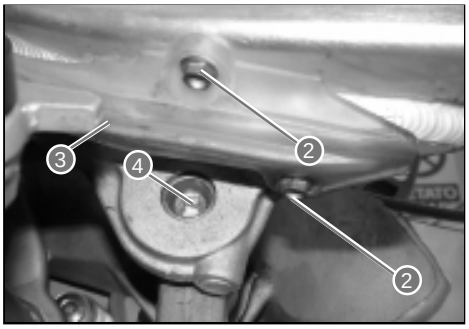

The spindle **4** relative to the fixing nut of the connection rod to the frame is therefore left free.
- Remove the nut **5**.
- Remove the connection rod **6** of the suspension.
- Remove the entire compensator assembly.

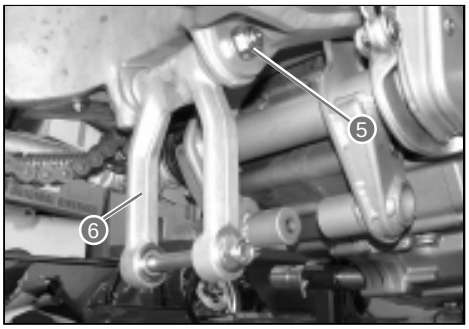

- Check the play of the spacers **7** inside the bearings.
- If excessive play is found, substitute the bearings on the balancer.

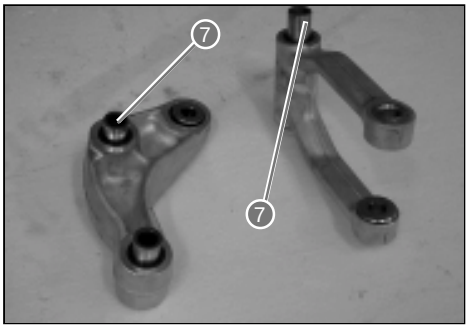

- Remove the oil seals. Using a drift of the correct diameter, knock out the roller bearing from its seat, exerting pressure on the external diameter of the bearing.

Carry out the substitution of the bearings and reassemble in the reverse order of removal. Check the condition of the bushes and the O-rings on the balancer. If wear is noted, substitute the bushes in the same way as the roller bearings are substituted.



Pay particular attention to the assembly of the oil seals. They must be inserted into their relative seats by using a drift on the external diameter.

Downloaded from www.Manualslib.com manuals search engine

REASSEMBLY - COMPENSATOR ASSEMBLY

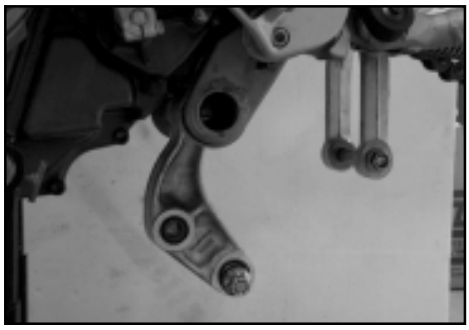

- Reassemble the compensator assembly and the connection rod in the reverse order of removal. Tighten the nuts to the specified torque.

Torque pressure-connection rod/frame 39.2/44.1 N·m (4.0/4.5 kg·m)
Torque pressure-compensator/frame 39.2/44.1 N·m (4.0/4.5 kg·m)

REAR FORK REMOVAL

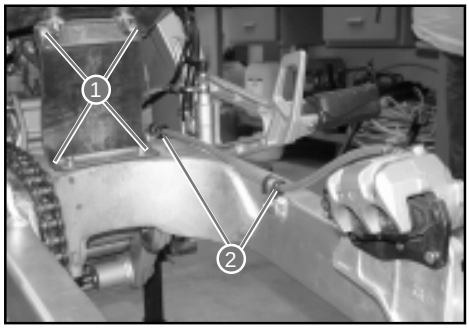

- Remove the rubber cap shock absorber protection by unscrewing the four screws **1**.
- Remove the two tube channels **2** of the rear brake tubing.
- Remove the rear brake pincer complete with attachment from the fork.



- Remove the two rubber caps **3** with Cagiva printed on the top.

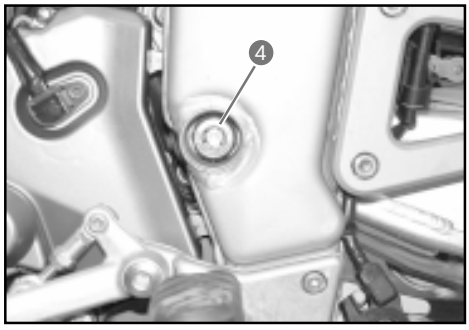

- Slacken the spindle **4** indicated in the figure.
- Remove the spindle.
- Remove the fork from the frame.

Downloaded from www.Manualslib.com manuals search engine

- Check the various components on the fork (bearings, oil seals, chain guide and the fork itself).

If excessive play is found between the bush **1** and the relative bearings **2** or the fork axis **3** and the relative bushes, substitute them. First, remove the oil seals and then the bearings utilising a tube of adequate diameter for the extraction.

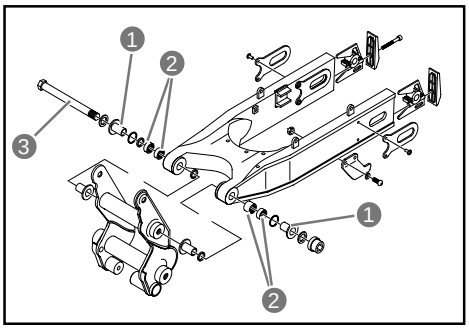

When reassembling, work on the external ring of the bearings. Pay particular attention to the oil seals.

Grease the various parts.

- After having positioned the fork in its seat, insert the spindle of the fork in the correct hole. Screw on the special bolt and tighten to the torque pressure specified of (58,8÷63,7 N·m (6÷6,5 kg·m))

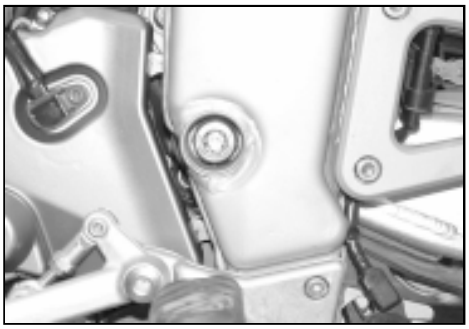

- Check the condition of the chain guide.
- If it is excessively worn, substitute it by removing the four relative screws.

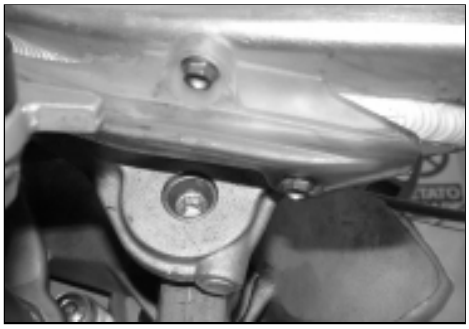

Downloaded from www.Manualslib.com manuals search engine

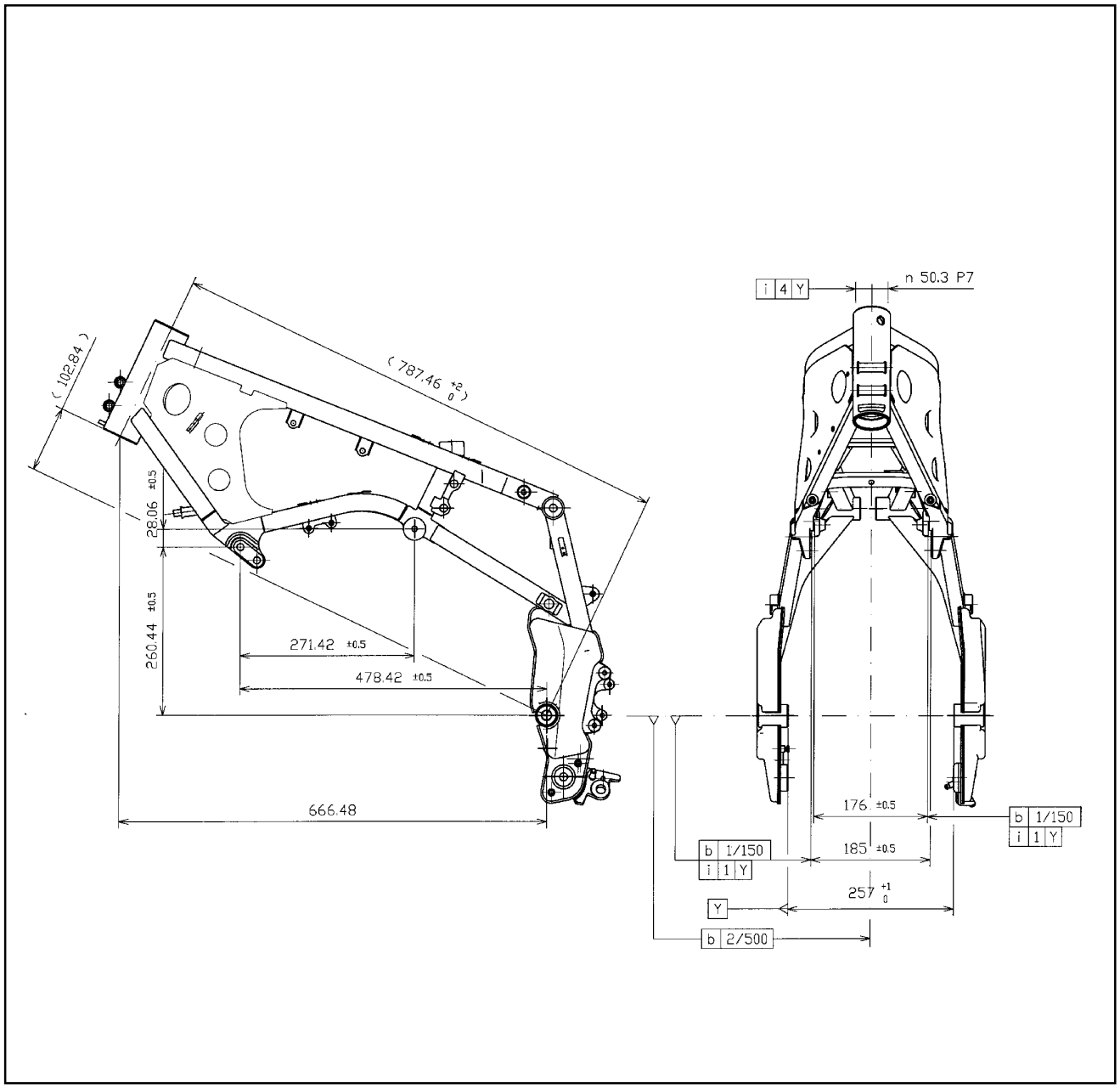

FRAME

Rectangular and square section tube framework in highly resistant steel.

FRAME SUBSTITUTION

If it is necessary to substitute or realign the frame, all components must be removed. Follow the procedures for removal of the various components as described in the various sections of this manual.
For a brief check, consult the figure.
The dimensions quoted above can establish if the frame needs to be re-aligned or substituted.

A badly damaged frame must be substituted.

Downloaded from www.Manualslib.com manuals search engine

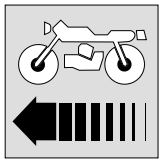

Section F

Downloaded from www.Manualslib.com manuals search engine

Brakes F-3
Brake discs F-4
Brake pad wear check F-4
Brake fluid substitution F-5
Bleeding air from the braking system F-6
Front brake pincer removal and disassembly F-7
Rear brake pincer removal and disassembly F-9
Front brake pump system removal and disassembly F-11
Rear brake pump system removal and disassembly F-14

Downloaded from www.Manualslib.com manuals search engine

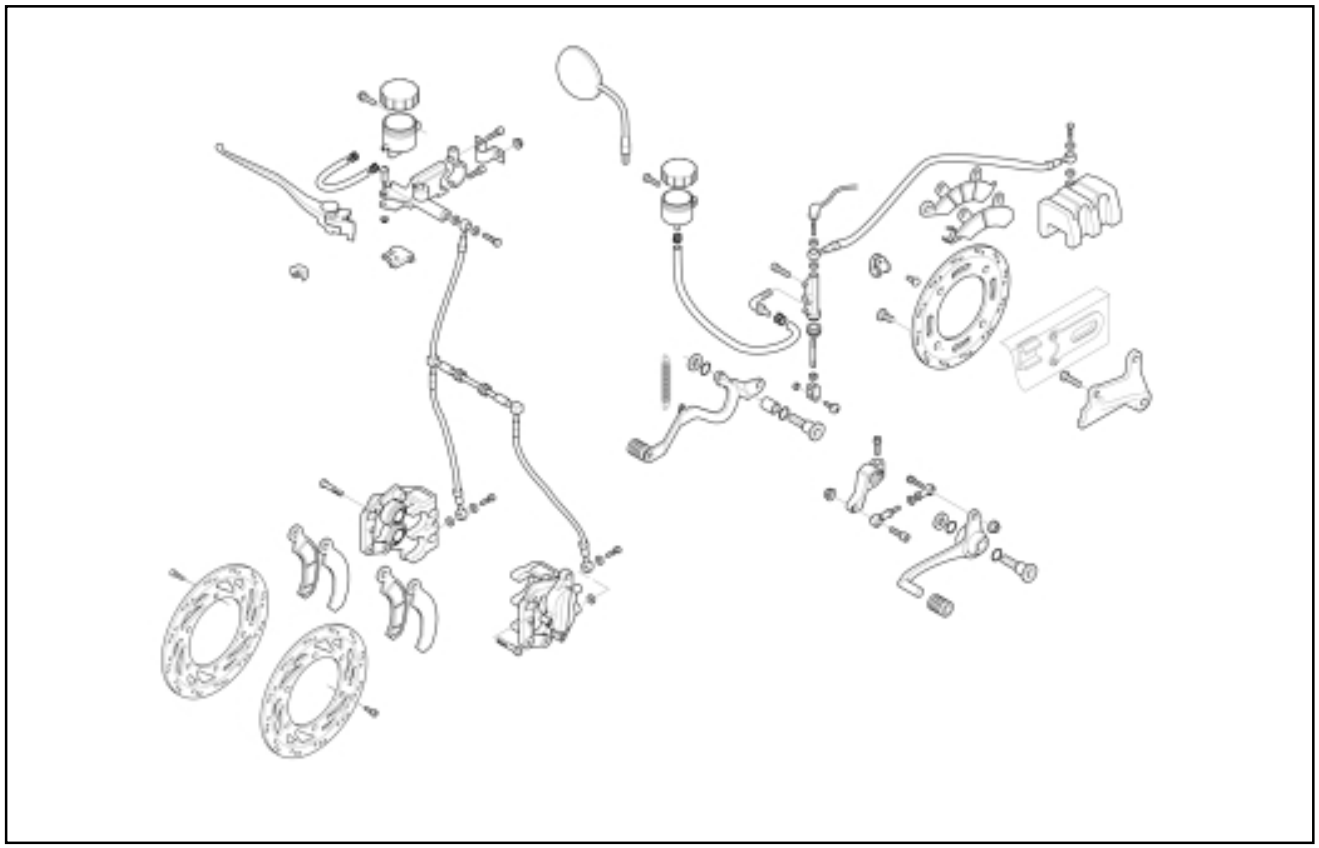

FRONT BRAKE

Type ..... Fixed twin discs Ø 296 mm. Double piston pincers.

REAR BRAKE

Type ..... Fixed single disc Ø 240 mm.

Downloaded from www.Manualslib.com manuals search engine

DISC BRAKE

Checking the disc is important. It must be perfectly clean without rust, oil, grease or other dirt and must not have deep lines scored on it. Scoring of a certain depth can be eliminated by reaming the disc, taking care to stay within the wear limits.

New front disc thickness ..... 4.0 mm
New rear disc thickness ..... 5.0 mm
Front disc thickness at the wear limit ..... 3.5 mm
Rear disc thickness at the wear limit ..... 4.5 mm

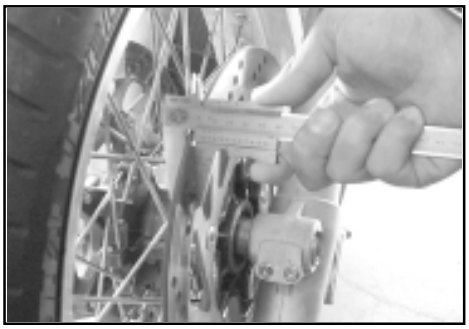



Carry out the distortion check of the disc utilising a comparator with the disc mounted on the hub.

Max. distortion allowed ..... 0.3 mm

Remove the wheel as described in the Suspension chapter. To remove the discs from the hub fixings, unscrew the six screws for the front disc or the four screws for the rear disc.

When reassembling keep the work surface perfectly clean.

Screw in the screws to a torque pressure of 21.5-23.5 N.m

Specific product: LOCTITE 468 AV

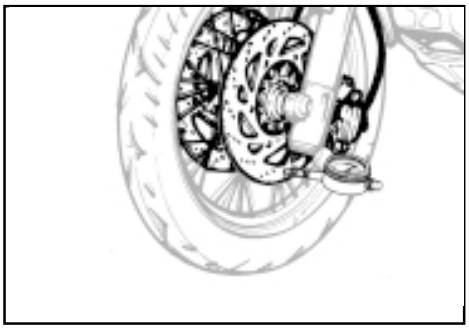

BRAKE PAD WEAR CHECK

Check the brake pads for wear every 6000 km. The thickness must not be less than the wear check grooves cut into the surface of the pad and must not be absolutely less than 1.5 mm.

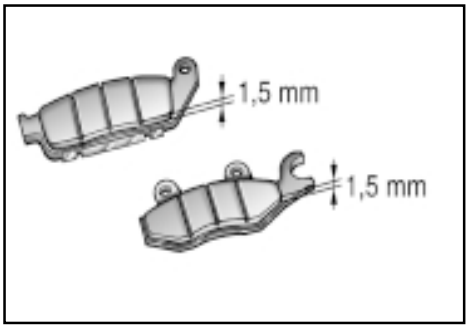

Downloaded from www.Manualslib.com manuals search engine

To check the pads, the following components must be removed:

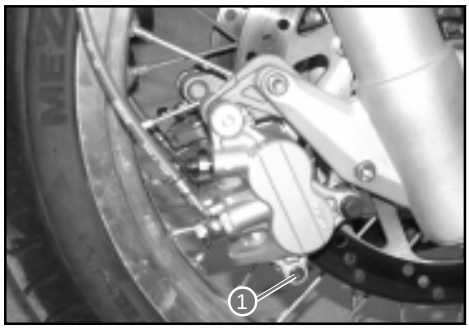

Front brake:
- Remove the blocking screw **1**;
- Unscrew the plug underneath;
- Extract the pad.

Rear brake:
- Remove the two screws of the spray guard **2** and remove it;
- Remove the rear brake pincer from its attachment by unscrewing the two screws **3**;
- Remove the two pins **4** indicated in the figure.
- Remove the pads;
- When reassembling, tighten the pincer fixing screws to the fork to a torque of 34.3 – 39.2 N·m.

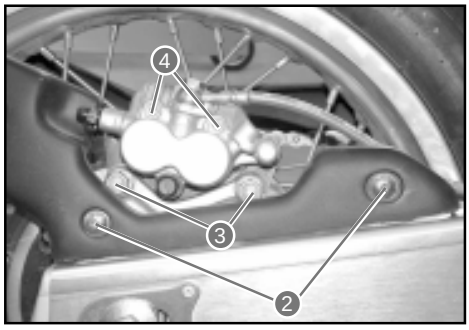

Reassemble in the reverse order of removal. Pay attention to the leaf spring inside the rear brake pincer.

It is not necessary to carry out the bleeding of the air from the system after having substituted the brake pads. It is sufficient just to activate the brake lever or pedal repeatedly to bring the pistons back to the normal position. Check the brake fluid level in the chamber and top up the system if necessary.

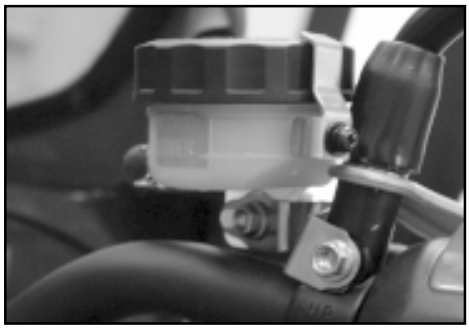

It is advisable to take care during the first 100 km after changing the pads. The friction material of the pads needs to settle in.

Downloaded from www.Manualslib.com manuals search engine

BRAKE FLUID SUBSTITUTION

- Place the machine on a level surface and straighten the handlebars.
- Remove the cap of the brake fluid chamber and the diaphragm by removing the cap stop **1**.
- Suck out as much of the old liquid as possible.

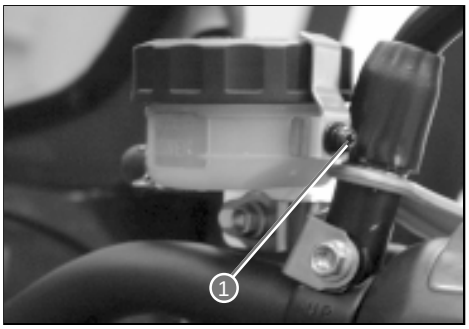

- Remove the rubber cap **2** on the air bleed valve nipple.
- Apply a transparent tube to the bleed valve nipple **3** of the pincer and insert the other end of the tube in a container.
- Slacken the bleed valve nipple and pump the brake lever or pedal until the system is completely empty of brake fluid.
- Close the bleed valve nipple and disconnect the tube. Fill the chamber with new brake fluid until it reaches the upper level mark.

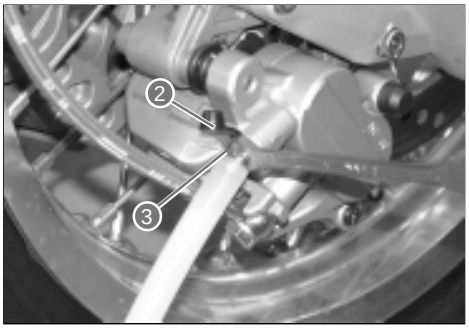

The same procedure is used for the front brake.
Specific product: AGIP BRAKE 4.

After filling the brake fluid chamber, always carry out the bleeding of the air from the system.

Downloaded from www.Manualslib.com manuals search engine

BLEEDING THE AIR FROM THE BRAKING SYSTEM

The air that is trapped in the braking system acts as a cushion, absorbing the greater part of the pressure exerted by the brake pump. The performance of the brake pincer is therefore compromised. The presence of air in the system is indicated by a “sponginess” of the brake lever or pedal and a reduction in the braking performance. As this situation could be highly dangerous for both rider and the machine, it is necessary to effect the bleeding of air from the braking system immediately following maintenance on the brakes. This procedure is carried out as follows:

- Refill the brake fluid chamber with brake fluid until it reaches the “UPPER” mark.
- Replace the chamber cover to avoid the entry of dirt.
- Remove the rubber cap and apply a plastic tube to the bleed valve nipple. Insert the free end of the tube in a container.

Torque pressure
Air bleed valve nipple: 7.5 N.m (0.75 kg-m)

- Front brake: bleed the air via the bleed valve nipple.
- Squeeze and release the brake lever several times in rapid succession and then squeeze it without releasing the lever. Slacken the bleed valve nipple rotating it a _ of a turn so that the fluid can pour out into the container. This releases the tension on the brake lever and allows it to move towards the handgrip of the handlebar. Close the valve, squeeze and release the brake lever again and reopen the valve. Repeat this operation until the fluid that pours into the container does not contain bubbles of air.

The bleeding must be carried out on both front brake pincers at the same time.

During the bleeding of the brake system, top up the brake fluid chamber as necessary. There must always be brake fluid in the chamber.

- Close the bleed valve nipple and disconnect the plastic tube. Refill the brake fluid chamber with brake fluid until the fluid reaches the “UPPER” mark.

Handle brake fluids with care. They chemically react with paint, rubber, etc.

- The only difference in the procedure for the rear brake is that a pedal activates the brake and not a lever.

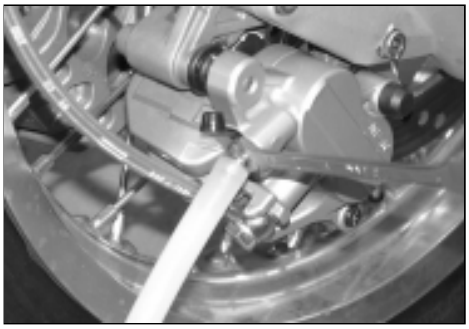



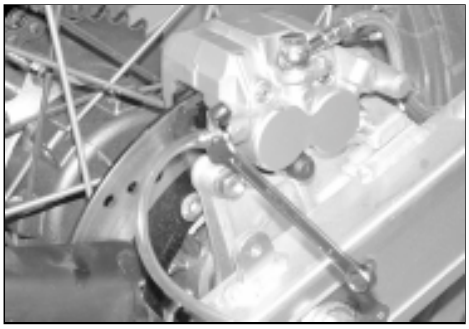



Downloaded from www.Manualslib.com manuals search engine

FRONT BRAKE PINCER ASSEMBLY REMOVAL

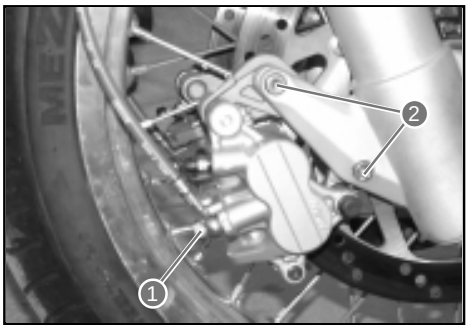

If there are signs of leakage or traces of oil on the pincer body, it must be substituted.

- Drain the brake fluid as previously described and illustrated.
- Remove the brake tube from the pincer by unscrewing the joint bolt **1**. Collect the brake fluid that is left in the system in a suitable container.

Place a cloth underneath the joint bolt of the brake pincer to collect the final drops of brake fluid.

- Remove the brake pincer assembly by unscrewing the two pincer mounting screws **2**.

Never use brake fluid left over from a previous change of fluid or brake fluid that has been stored for a long period of time.

If the brake system leaks fluid, riding safety is compromised. Leaking fluid can also damage painted surfaces. Check for cracks or leaks on the tubes and at the joint bolts of the brakes.

To reassemble, completely push in the pistons and proceed in the reverse order of removal. Tighten the joint bolt and the two pincer screws to the torque specified.

Brake tube bolt	23 N·m
Pincer fixing bolt	21.5÷23.5 N·m

After replacing the pincer assembly, bleed the air out of the braking system.

Downloaded from www.Manualslib.com manuals search engine

REAR BRAKE PINCER REMOVAL

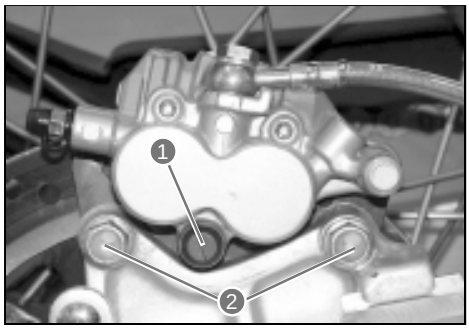

- Remove the spray guard fixing screws.

Never use brake fluid left over from a previous change of fluid or brake fluid that has been stored for a long period of time.

If the brake system leaks fluid, riding security is compromised. Leaking fluid can also damage painted surfaces. Check for cracks or leaks on the tubes and at the joint bolts of the brakes.

- Remove the bolt **1**.
- Remove the two pincer **2** mounting screws.

If there are signs of leakage or traces of oil on the pincer body, it must be substituted.
To reassemble, completely push in the pistons and proceed in the reverse order of removal. Tighten the joint bolt and the two pincer screws to the torque specified.
Brake tube bolt: 23 N.m
Pincer fixing bolt: 21.5-23.5 N.m

After replacing the pincer assembly, bleed the air out of the braking system.

Downloaded from www.Manualslib.com manuals search engine

FRONT BRAKE PUMP ASSEMBLY REMOVAL

- Drain the brake fluid as described in page F-6.
- Disconnect the front brake switch leads.



- Place a cloth underneath the brake pump joint bolt to collect the last drops of fluid left in the system. Remove the joint bolt **1** and disconnect the brake tube.



Remove the brake fluid immediately so that it does not come into contact with any painted surface of the machine. Brake fluid reacts chemically with paint, plastic, rubber, etc., causing severe damage.

- Remove the right hand rear view mirror.
- Remove the two screws of the pump support clamp paying attention to the spacer underneath the lower screw.
- Remove the brake pump together with the brake fluid chamber.

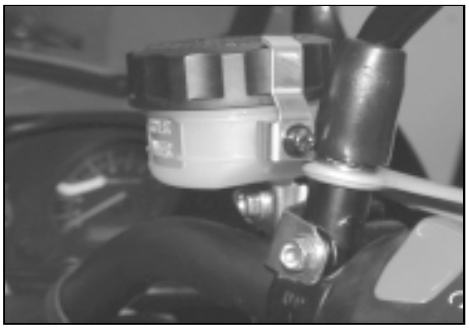

- Remove the fluid chamber along with the tube connector by releasing the elastic ring **3**.

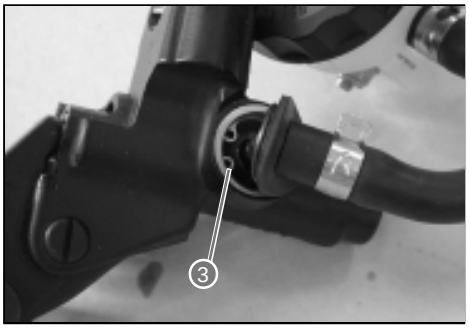

Substitute the O-rings.

- Remove the brake lever **4** and the brake switch **5**.

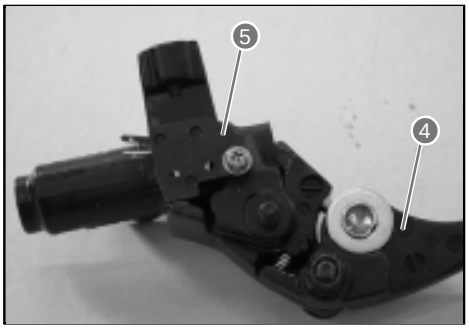

Downloaded from www.Manualslib.com manuals search engine

BRAKE PUMP REASSEMBLY

Reassemble the brake pump in the reverse order of removal.

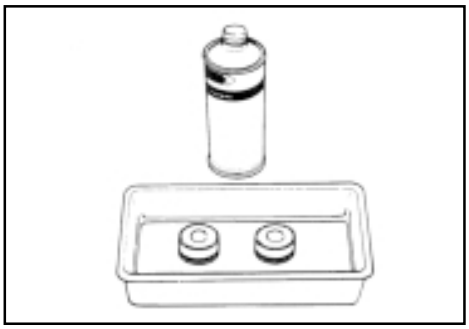

- When reassembling the brake switch, align the projection of the switch with the hole of the pump.

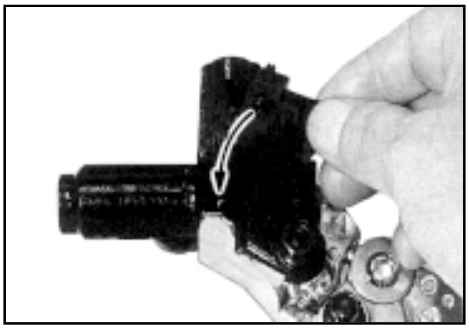

- When reassembling the brake pump onto the handlebars, tighten the upper fixing bolt first.

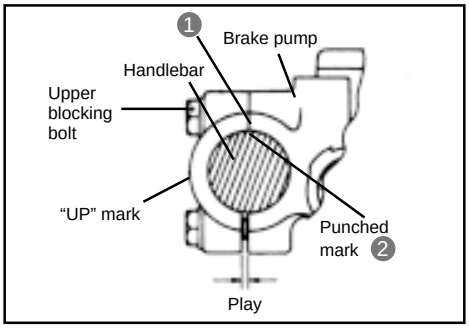

Torque pressure
Front brake pump fixing bolt: 10 N.m (1.0 kg-m)

Bleed the air from the braking system after reassembling the brake pump.

- If the support is substituted, make sure that when reassembling the brake fluid chamber align the projection of the chamber with the hole of the support.

Downloaded from www.Manualslib.com manuals search engine

REAR BRAKE PUMP REMOVAL

- Drain the brake fluid from the rear brake system as described in page B-7.
- Remove the right hand passenger footrest by unscrewing the two screws **1** as shown in the figure.

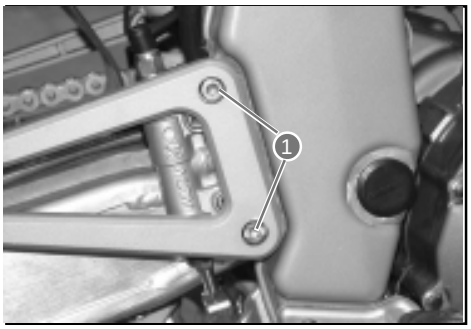

- Place a cloth underneath the joint **2**.
- Disconnect the electrical connections. Remove the rear brake tube joint **2**.



- Remove the screws **3** and the relative nut.

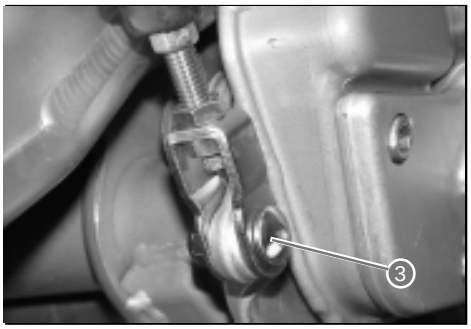

- Disassemble the rear brake fluid chamber by removing the support screw **4**.
- Remove the elastic bands.

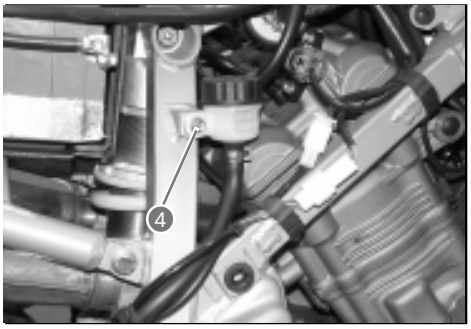

- Remove the two screws **5** indicated in the figure.
- Extract the rear brake pump.

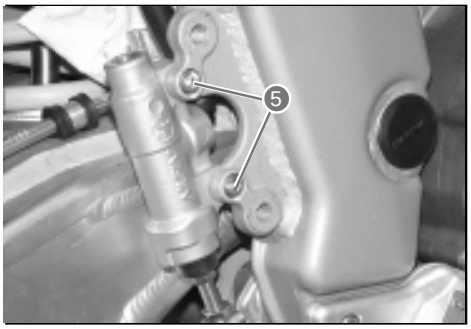

Downloaded from www.Manualslib.com manuals search engine

BRAKE PUMP REASSEMBLY

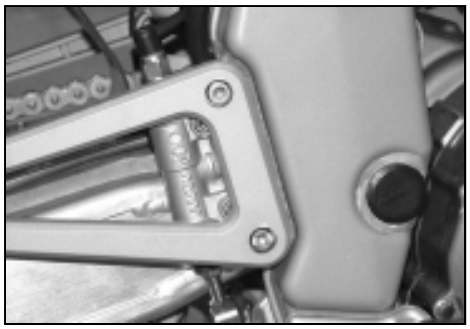

Install the brake pump assembly in the reverse order of removal. Pay attention to the following points:

Specified product: AGIP BRAKE 4 brake fluid.
- Tighten each bolt to the specified torque.

Torque pressure:

Brake tube joint bolt:	23 N.m (2.3 kg-m)
Brake pump mounting bolt to the frame:	10 N.m (1.0 kg-m)

Bleed the air from the braking system after reassembling the brake pump (see page F-7).

Downloaded from www.Manualslib.com manuals search engine

Downloaded from www.Manualslib.com manuals search engine

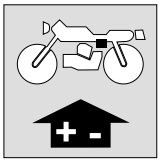

Section **G**

Downloaded from www.Manualslib.com manuals search engine

Precautionary maintenance advice G-5
Battery G-6
Charging system G-7
Starter system and side stand/ignition security system G-12
Ignition system G-21
Instruments G-28
Lights G-34
Switches G-37

Downloaded from www.Manualslib.com manuals search engine

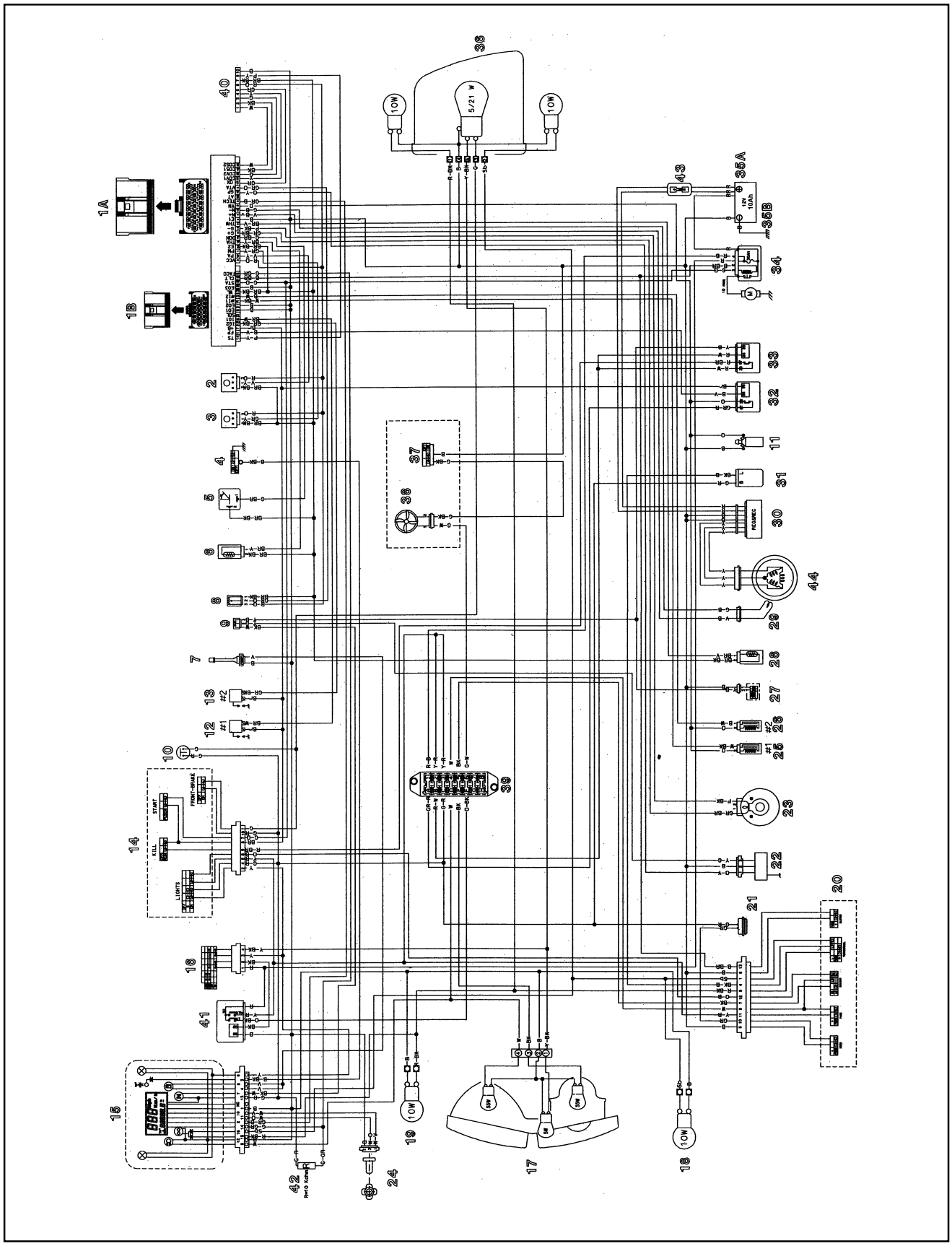

Downloaded from www.Manualslib.com manuals search engine

ELECTRICAL WIRING SYSTEM DIAGRAM:

1. Injection CPU
2. Atmospheric pressure sensor
3. Air intake air pressure sensor
4. Oil pressure
5. Leaning angle sensor
6. Air intake air temperature sensor
7. Fuel probe
8. Butterfly sensor
9. Vehicle security
10. Rear stop switch
11. Fuel pump
12. Coil #1
13. Coil #2
14. Right commutator
15. Instruments
16. Key commutator
17. Headlight
18. Front left indicator
19. Front right indicator
20. Left commutator
21. Acoustic signal
22. Gearchange sensor
23. Cam sensor
24. Speed sensor
25. Injector #1
26. Injector #2
27. Side stand switch
28. Engine coolant temperature sensor
29. Engine pick up
30. Rectifier
31. Warning hazard
32. Fuel pump relay
33. Injection relay
34. Remote switch
35. Battery
36. Rear light, left and right rear indicators
37. Heat switch
38. Fan
39. Fuse box
40. Diagnostics
41. General relay
42. Resistance
43. Rectifier fuse
44. Generator

COLOUR LEGENDS:

Red	R
Yellow	Y
Blue	B
Green	G
White	W
Black	BK
Pink	P
Violet	V
Light blue	Sb
Grey	Gr
Orange	O
Brown	Br

POSITION	AMPERAGE	DESCRIPTION
1-A	10A	FUEL PUMP
2-B	10A	INJECTION
3-C	15A	SERVICES
4-D	15A	MAIN BEAM
5-E	15A	DIPPED BEAM
6-F	15A	RESERVE FUSES
7-G	15A	RESERVE FUSES
8-H	10A	RESERVE FUSES

Downloaded from www.Manualslib.com manuals search engine

PRECAUTIONARY MAINTENANCE ADVICE CONNECTORS

- When connecting a connector, make sure that a click is heard.
- Check to see if the connector is dirty, corroded or if its cover is broken.

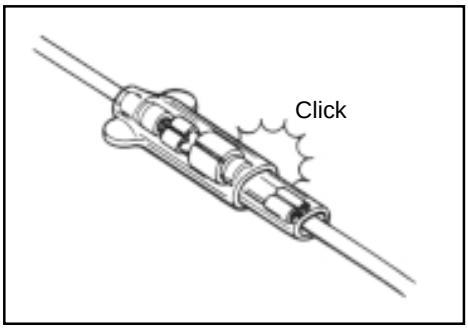

CONNECTORS

- Block connectors – release the block before disconnecting it and push it right in when making the connection.
- When disconnecting a connector, grip the body of the connector and do not pull on the leads.
- Always check to see if the contacts of the connectors are loose or bent.
- Check to see if the terminals are corroded or dirty.

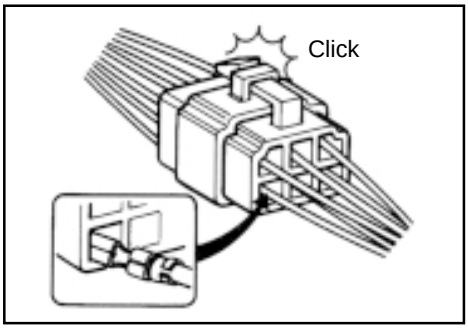

CONNECTING TERMINALS

- Place the fixing bands in the original position.
- Bend the terminal so that the wiring is fixed solidly.
- When systemising the wiring, make sure that leads do not hang down. They must be fixed correctly.
- Do not utilise wire or other substitutes for fixing bands.

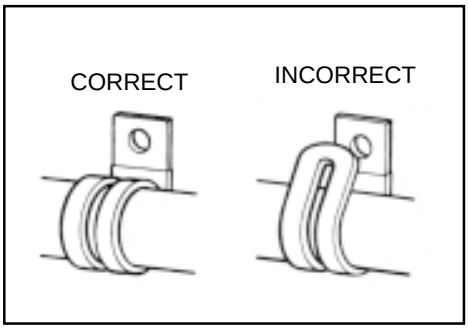

FUSES

- When a fuse burns out, always investigate the cause, repair and then substitute the fuse.
- Do not utilise a fuse of a different capacity to the original one.
- Do not use wire or other substitutes for fuses.

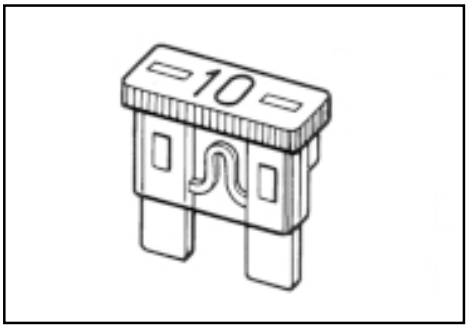

SEMICONDUCTOR PARTS

- Take care to not drop parts with a semiconductor incorporated such as the ECM CPU.
- When checking these parts, follow the instructions implicitly. Grave damage could be caused if instructions are not followed to the letter.

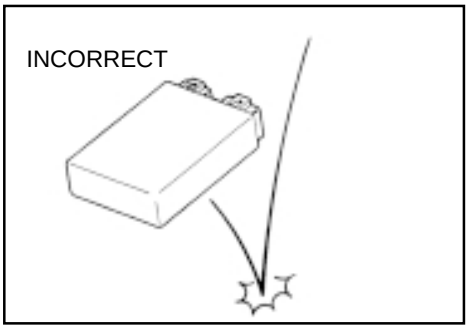

Downloaded from www.Manualslib.com manuals search engine

BATTERY

- The battery is sealed and does not need any maintenance whatsoever. Bear in mind that the battery electrolyte contains sulphuric acid. Should there be a leakage of acid from the battery, avoid contact with the eyes, skin and clothing. If the acid should come into contact with the eyes or the skin, rinse abundantly with water and immediately contact a doctor.
If the acid should be swallowed, drink lots of water or milk followed by milk of magnesia, scrambled eggs or vegetable oil.
Immediately call a doctor.
Batteries produce explosive gases. Keep them away from naked flames, sparks or cigarettes. Ventilate the environment when re-charging a battery in a closed environment.
Protect the eyes with when working in proximity of a battery.
Keep out of children's reach.

Description	FIAMM F12-12B
Capacity	36 kC 10 Ah
Specific gravity standard electrolyte	1265÷ 1275

MAINTENANCE

Visually check the external part of the battery. If there are signs of cracks or electrolyte leakage, substitute the battery (with a new one) immediately. If the terminals of the battery are corroded or covered with white powder, clean with emery paper.

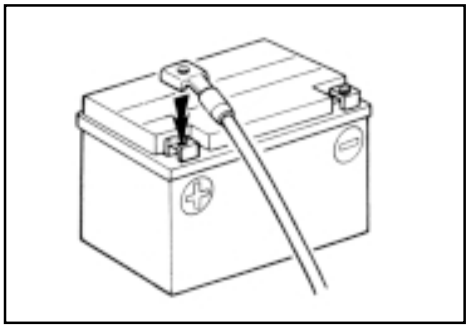

CHARGING THE BATTERY

Check the charge condition of the battery using a voltmeter. If the open circuit output is less than 12.6V, charge the battery in the following way:

- Utilise a constant output battery charger.
- Connect the cables of the battery charger to the terminals of the battery taking care to connect the positive terminal (+) first. The red cable is connected to the positive terminal (+) of the battery and the black cable is connected to the negative terminal (-) of the battery.
- Check that the connections are correct.
- Apply a current of 2.5A for 12-24 hours at a constant output of 14.4-14.7V.
- Let the battery rest for at least twelve hours. Check the output of the battery; it should not be less than 12.6V. Always check the battery charge condition before reinstalling the battery.
- When connecting the battery, take care to connect the positive cable (+) first.

Downloaded from www.Manualslib.com manuals search engine

CHARGING SYSTEM

DESCRIPTION

The charging circuit of the system is illustrated in the figure and is composed of an AC generator, a rectifier and a battery.
The AC alternating current generated by the generator is transformed into CC continuous current by the rectifier and is then utilised for charging the battery.

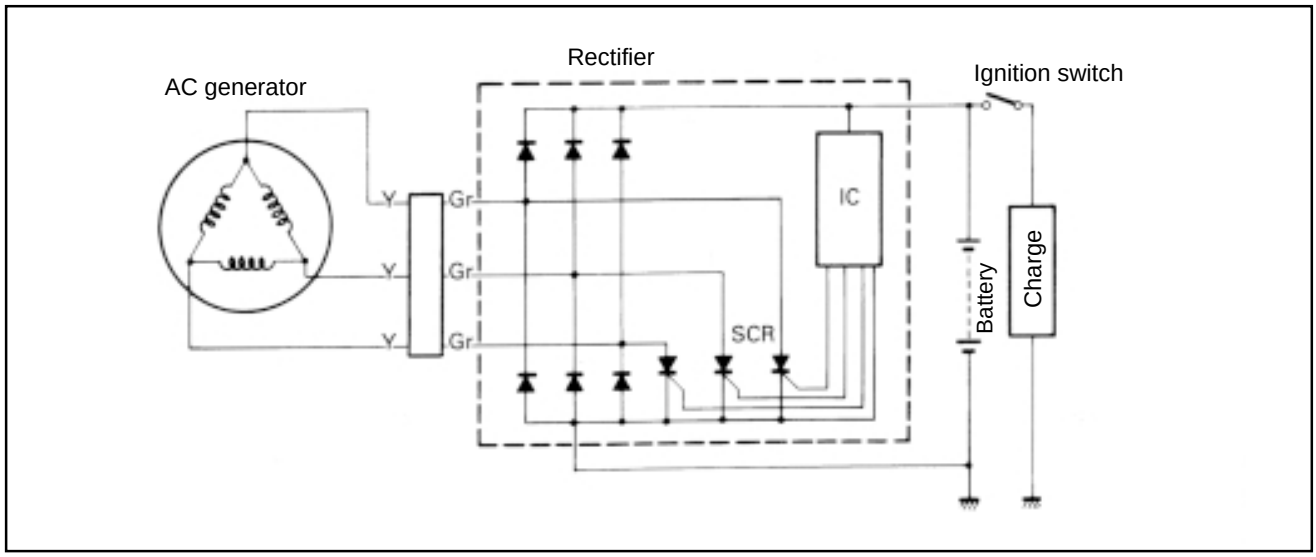

FUNCTION OF THE RECTIFIER

When the rpm of the engine are low and the voltage generated by the AC generator is less than the regulated nominal voltage supplied by the rectifier, the rectifier does not operate. In this case, the current generated charges the battery directly.

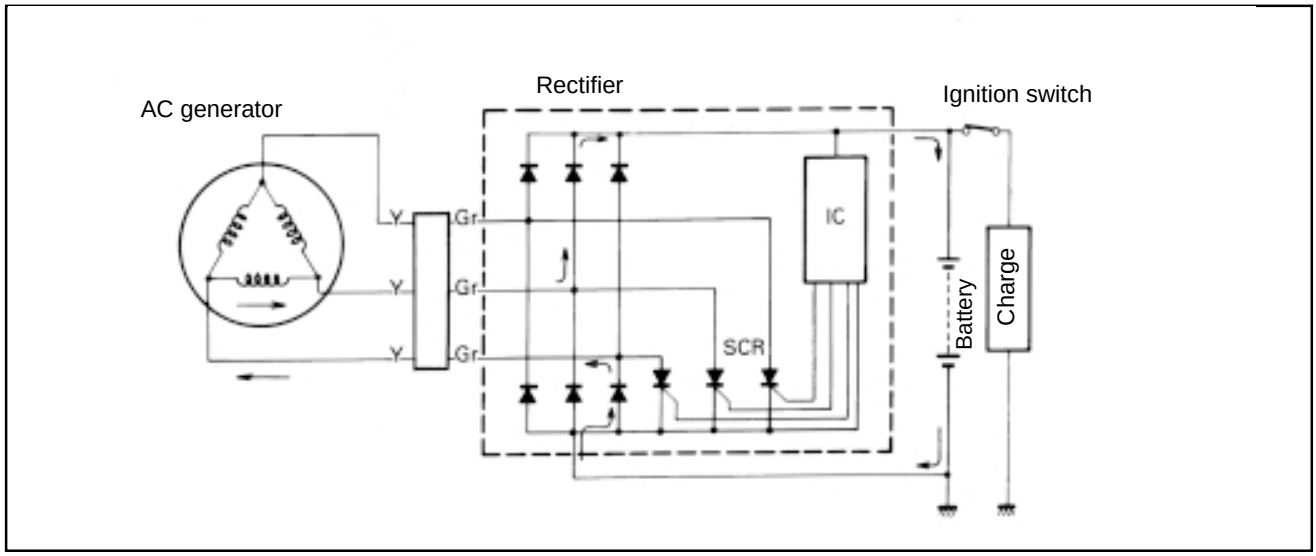

Downloaded from www.Manualslib.com manuals search engine

When the engine rpm increase, the voltage generated by the AC generator also increases. The voltage between the battery terminals also increases in proportion. When it reaches the regulated voltage of the CI (integrated circuit) and the CI is then in an “ON” position, a signal is sent to the SCR port (Tiristore) and the SCR is also brought to an “ON” position.
The SCR becomes a conductor in the direction of **A** to **B**. At this point, the generated current from the AC generator passes through the SCR without charging the battery and returns to the AC generator. At the end of this phase, seeing that the AC current generated by the AC generator returns to point **B**, The inverted current tends to flow towards the SCR. The circuit of the SCR therefore passes from the “OFF” condition and starts to charge the battery again. These repetitive conditions maintain the charging output and the current of the battery, protecting the battery from overloading.

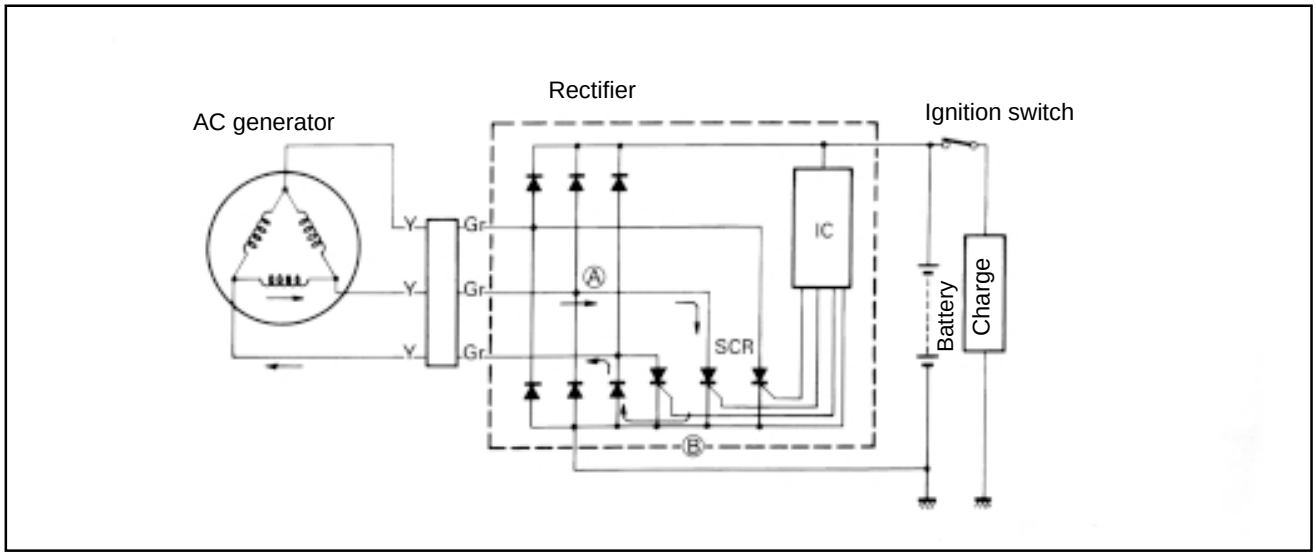

Downloaded from www.Manualslib.com manuals search engine

DIAGNOSTICS

The battery discharges rapidly

Check the accessories that consume too much energy.
- Installed → • Remove the accessories.
- Not installed ↓

Check the battery current leakage. (See page G-10)
- There are leakages → • Wiring in short-circuit. • Leads loose or disconnected. • Defective battery.
- There are no leakages ↓

Check the voltage charge between the terminals of the battery. (See page G-10)
- Correct → • Defective battery. • Abnormal riding conditions.
- Incorrect ↓

Check the continuity of the generator winding (see page G-11).
- Missing continuity → • Defective generator winding or leads disconnected.
- Continuity present ↓

Check the voltage of the generator in absence of charge (see page G-11)
- Incorrect → • Defective AC generato
- Correct ↓

Check the rectifier (see page G-11).
- Incorrect → • Defective rectifier
- Correct ↓

Check the wiring system.
- Incorrect → • Wiring in short-circuit. • Coupling contacts poor or defective.
- Correct ↓

• Defective battery.

Other

Excessive battery charge.	• Defective rectifier • Defective battery. • Generator lead coupling contact poor or defective.

Downloaded from www.Manualslib.com manuals search engine

CHECK

BATTERY CURRENT LEAKAGE TEST

- Remove the seat and the under seat compartment.
- Turn the ignition switch to the “OFF” position.
- Disconnect the negative cable - of the battery.
- Connect a multi-tester between the - negative terminal and the – negative cable of the battery.

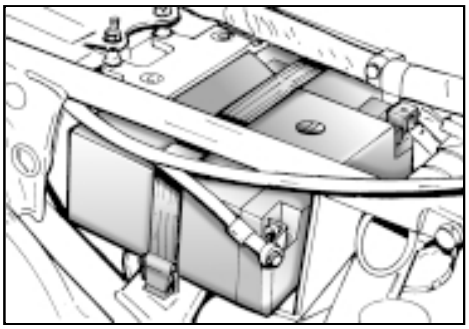

N.B. The leakages of more than 1 mA are registered on the multi-tester.

Battery current leakage: less than 1 mA.
Circuit tester dial indication: Current (⎓ , 20mA)

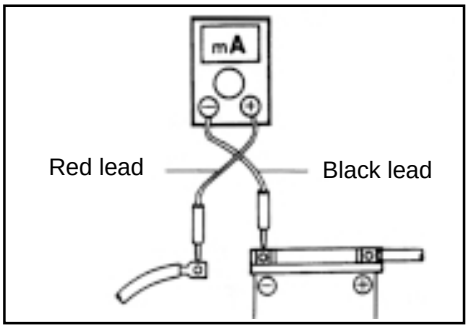

*** Firstly, use a high range of the multi-tester when utilising the ampmeter, because the current leakage could be high.**
*** Do not turn the ignition switch to the “ON” position when measuring the current.**

If a leakage is found, look for the part where the circuit tester measures less than 1 mA by removing the couplings and connectors one at a time.

CHARGE OUTPUT TEST

- Remove the seat and the battery support plate.
- Switch on the engine and let it run at 5000 rpm with the headlight switch in the “ON” position and the selector at the “HI” main beam position.

Measure the CC voltage between the + positive and – negative terminals of the battery with a multi-tester. If the circuit tester indicates less than 13.3V or more than 14.3V, check the winding of the generator and the rectifier.

When carrying out this test, check that the battery is completely charged.

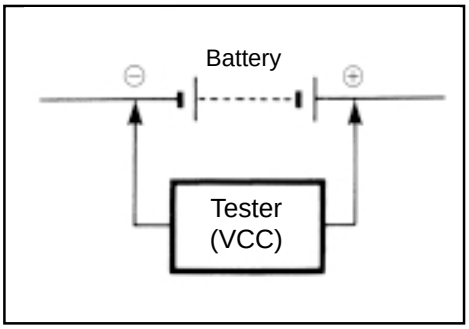

Charge output
Standard: 13.3 – 14.3V at 5000 rpm
Circuit tester dial indication: Voltage (⎓)

Downloaded from www.Manualslib.com manuals search engine

GENERATOR WINDING RESISTANCE TEST

- Remove the left side support cover.
- Disconnect the coupling from the generator.

Measure the resistance between the three leads of connector **1**.
Check that the stator nucleus is isolated.
If the resistance does not conform to the specified values, substitute the stator. (See Chapter D).

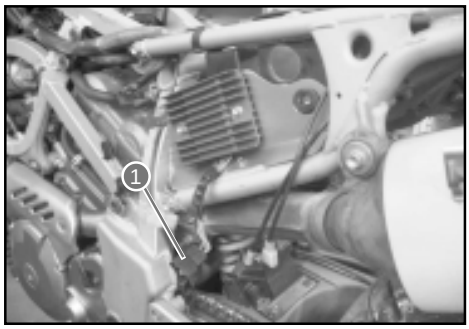

Circuit tester dial indication: Resistance (Ω)
Stator winding resistance: 0.1-1.0 Ω

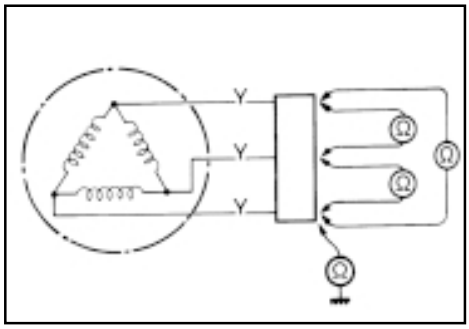

When the above described test is carried out, it is not necessary to remove the AC generator.

TESTING THE GENERATOR PERFORMANCE IN THE ABSENCE OF A CHARGE

- Switch on the engine and let it run at 5000 rpm.

Utilising the multi-tester, measure the voltage between the three leads. If the measurement of the circuit tester is less than the specified value, substitute the AC generator with a new one.

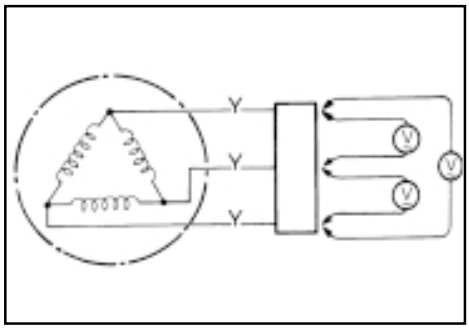

Generator performance in the absence of a charge:
More than 70V at 5000 rpm (cold engine)
Circuit tester dial indication: Voltage (~)

RECTIFIER TEST

- Remove the right hand support cover.
- Disconnect the connectors of the rectifier.

Utilising a multi-tester, measure the voltage between the leads indicated in the following table.
If the voltage is not correct, substitute the rectifier.

Circuit tester dial indication: Voltage ⎓

Unit: V

The circuit tester probe on − \ The circuit tester probe on +	R	B/W	Gr_1	Gr_2	Gr_3
R		0,7	0,4÷0,6	0,4÷0,6	0,4÷0,6
B/W					
Gr_1		0,4÷0,6			
Gr_2		0,4÷0,6			
Gr_3		0,4÷0,6			

Gr: Grey R: Red B/W: Black with a white line

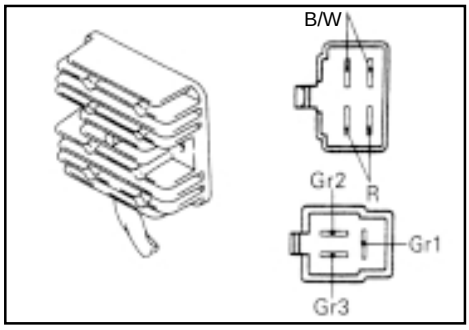

If the measurement of the circuit tester is less than 1.4V, substitute the battery of the multi-tester with the probes of the circuit tester not connected.

Downloaded from www.Manualslib.com manuals search engine

STARTER SYSTEM AND SIDE STAND/IGNITION SECURITY SYSTEM

STARTER SYSTEM DESCRIPTION

The starter system is represented by the diagram below. It is comprised of a starter motor, clutch lever position switch, starter relay, starter button, engine kill button, right hand command, side stand relay, side stand switch, gearchange position switch, ignition switch (IG) and the battery. Pressing the starter button (situated on the right hand switch assembly of the handlebars) agitates the relay that causes the contact points to close that connect the starter motor to the battery. The starter motor absorbs approximately 80 amperes when starting the engine.

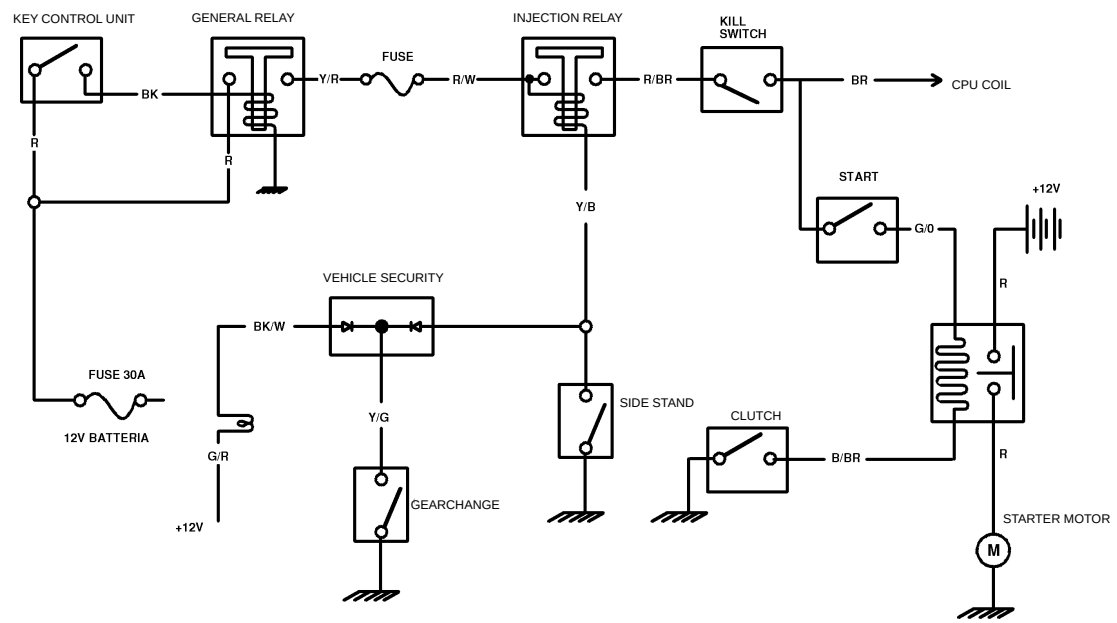

BR	Brown
R	Red
BK	Black
Y/R	Yellow/red
G/R	Green/Red
BK/W	Black/White
R/W	Red/White
R/BR	Red/Brown
Y/B	Yellow/Blue
B/BR	Blue/Brown
G/O	Green/Orange

Downloaded from www.Manualslib.com manuals search engine

SIDE STAND/IGNITION SECURITY SYSTEM DESCRIPTION

The side stand/ignition security system avoids the switching on of the engine whilst the side stand is in the lowered position.

The circuit consists of a relay, warning light, diode and switches. It controls the activation of the ignition coil on the basis of the position of the gearchange and the side stand using the interconnected gearchange and side stand position switches.
The ignition coil is activated only in the following two conditions:

1. Gearchange: “NEUTRAL (ON)” / Side stand: “LOWERED (OFF)”.
   The flow of current **A** agitates the injection relay and the ECM CPU and the coils are activated even if the side stand is lowered. This condition is exclusively to heat up the engine.

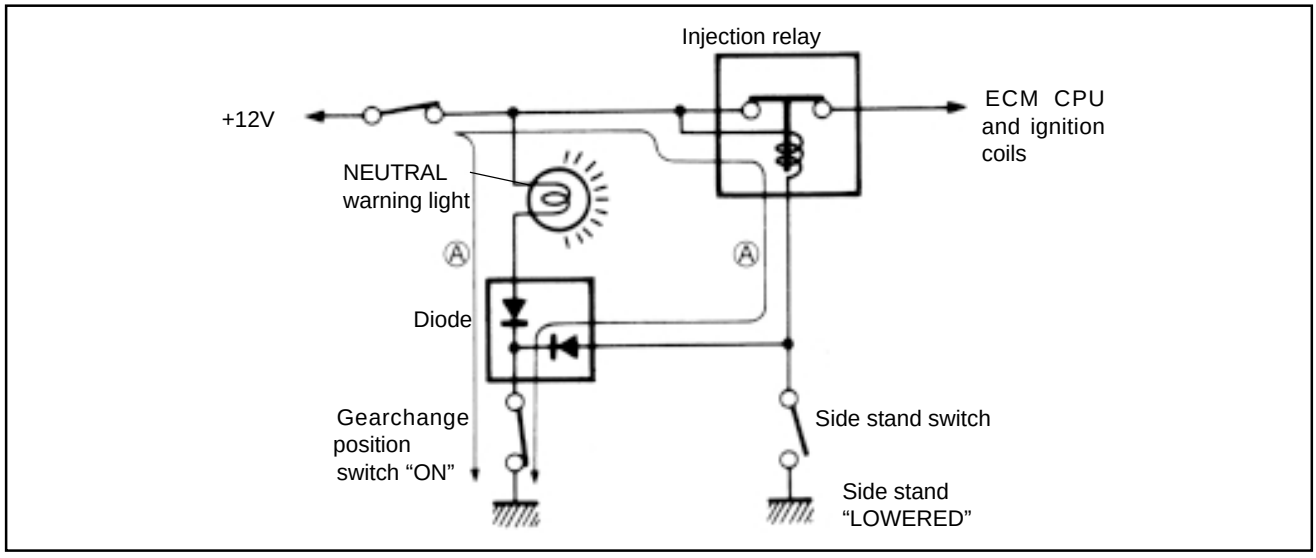

2. Gearchange: “GEAR INSERTED (OFF)” / “Side stand raised (ON)”
   The flow of current **B** agitates the injection relay and the coils are activated. The engine can be switched on in any gearchange position.

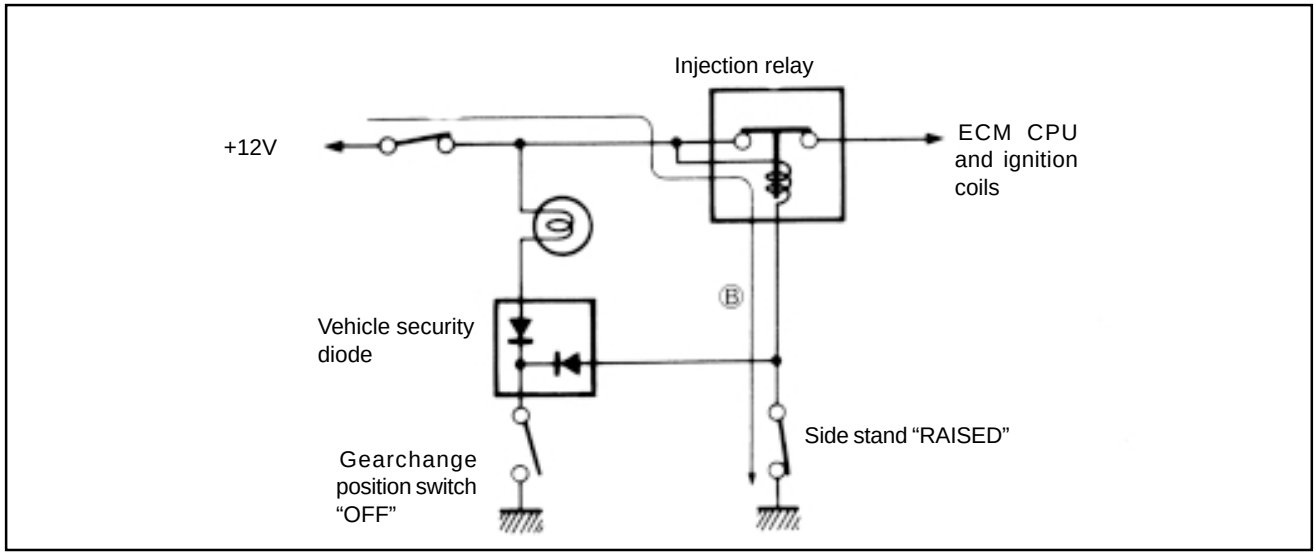

Downloaded from www.Manualslib.com manuals search engine

DIAGNOSTICS

The starter motor does not turn.

With the gears in neutral, turn the ignition switch to the "ON" position with the engine kill switch on "RUN". Listen for the click of the starter relay when the starter button is pressed. Pull in the clutch lever when the starter button is pressed.

- The click is heard → Check the to see that the starter motor turns by connecting the terminal of the starter motor directly to the + terminal of the battery (do not use a thin lead because the flow of current is high).
  - The motor turns → • Defective starter relay. • Starter motor lead loose or disconnected.
  - The motor does not turn → • Defective starter motor.
- The click is not heard → Measure the voltage of the starter relay at the relay connectors (between G/O + and B/Br -) when the starter button is pressed.
  - No voltage → • Defective ignition switch. • Defective engine kill switch. • Defective gearchange position switch. • Defective diode. • Defective injection relay. • Defective starter switch. • Defective clutch lever position switch. • Connector contacts poor or defective. • Wiring circuit open.
  - Voltage present → Check the starter relay.
    - Incorrect → • Defective starter relay.
    - Correct → • Starter relay contacts poor or defective.

With the side stand raised, the starter motor turns when the gearchange is in neutral but does not turn when the gear is inserted.

Check the side stand switch.

- Incorrect → • Defective side stand switch.
- Correct → • Wiring circuit open. • Connector contacts poor or defective.

Other

The engine does not turn even if the starter motor turns.	• Defective starter gear.

Downloaded from www.Manualslib.com manuals search engine

STARTER MOTOR REMOVAL AND DISASSEMBLY

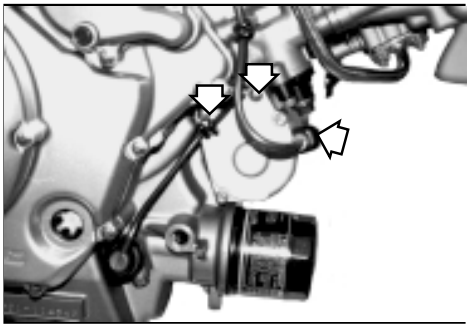

- Disconnect the starter motor lead.
- Remove the starter motor.

- Disassemble the starter motor as indicated in the figure.

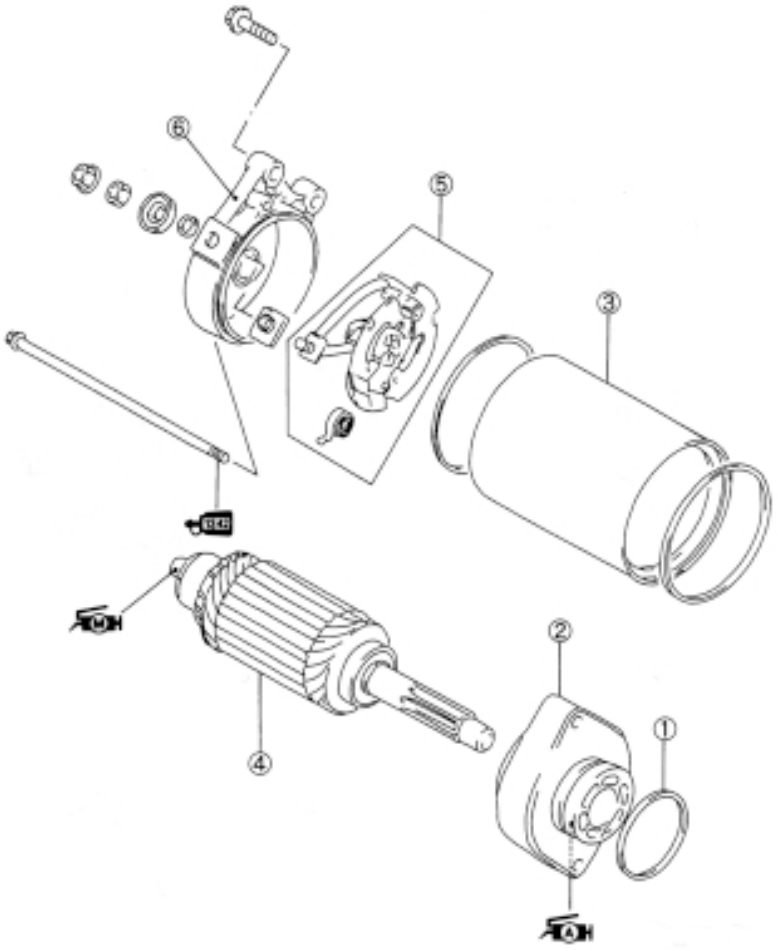

1. O-ring
2. Cover (internal)
3. Starter motor housing
4. Rotor
5. Spring and brush attachment
6. Cover (external)

STARTER MOTOR CHECK

BRUSHES

Check the brushes for signs of abnormal wear, cracks or if the brush attachment is smooth.
If the brushes are defective, substitute the brush assembly.



Downloaded from www.Manualslib.com manuals search engine

COMMUTATOR

Check to see if the connector is discoloured, abnormally worn or if the height **A** is insufficient.

Substitute the rotor if the commutator is abnormally worn. If the surface is discoloured, brighten it with emery paper and clean it with a dry cloth.

If the incision is not deep enough, cut the isolator **1** with a metal cutting saw.

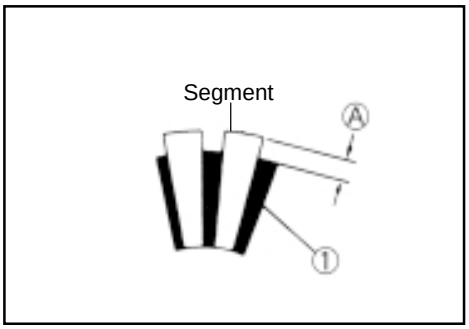

ROTOR WINDING CHECK

Check the continuity between each segment.

Check the continuity between each segment and the rotor shaft.

If there is no continuity between the segments or between the segments and the rotor, substitute the rotor.

Circuit tester dial indication: Continuity test (•)))

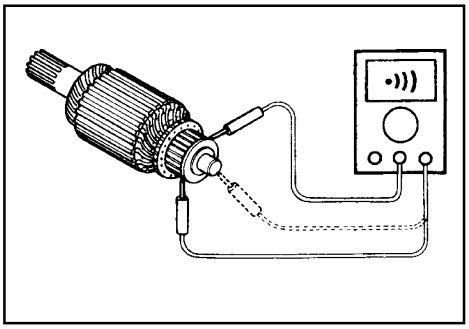

OIL SEAL CHECK

Check to see if the oil seal edges are damaged or if there are leakages.

If damage is found, substitute the cover of the housing.



STARTER MOTOR REASSEMBLY

Reassemble the starter motor in the reverse order of disassembly. Be careful of the following points:

Substitute the O-ring to avoid oil leaks and the entrance of humidity.



- Apply grease to the edge of the oil seal.

Specified product: AGIP GREASE 30.

- Apply a small quantity of MOLIKOTE to the rotor shaft.

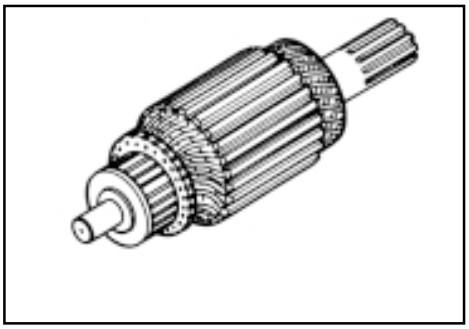

Downloaded from www.Manualslib.com manuals search engine

- Apply a small quantity of LOCTITE 243 to the bolts of the starter motor housing.

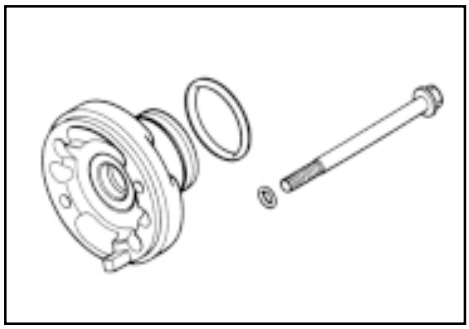

STARTER RELAY CHECK

- Disconnect the – negative cable of the battery **1**.

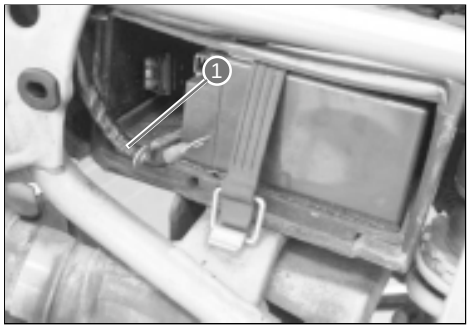

- Remove the cover of the starter relay **2**.
- Remove the complete rear protection complete with rectifier by unscrewing the three relative fixings.
- Disconnect the starter motor lead and the battery cable fixed to the starter relay. Remove the starter relay connector **3** from the starter relay.
- Remove the starter relay.

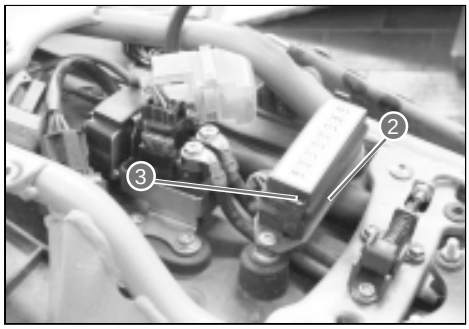

Apply 12 volts to the terminals **A** and **B** and check the continuity.

Circuit tester dial indication: Continuity test (•)))

Do not apply the voltage of the battery to the starter relay for more than five seconds. This could overheat the relay and damage the wiring.

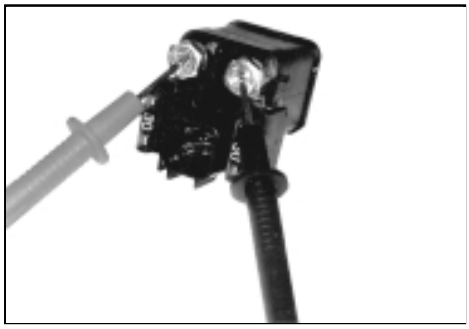

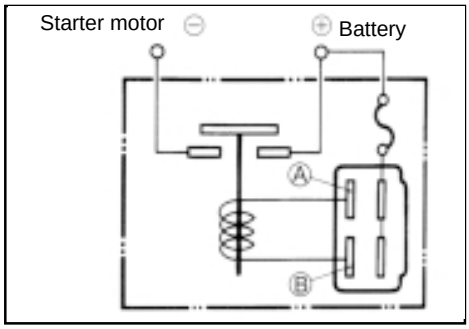

Downloaded from www.Manualslib.com manuals search engine

- Check to see if the winding of the relay is open or to Earth. Check the resistance. The winding is in good condition if the resistance is as indicated.

Starter relay resistance
Standard: 3-6 Ω

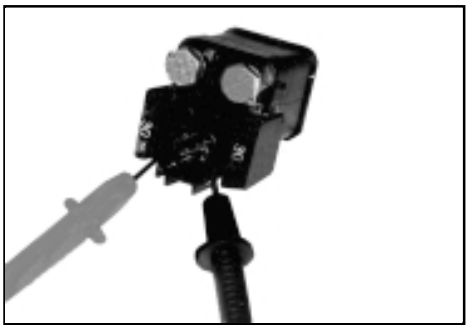

TESTING THE PARTS OF THE SIDE STAND/IGNITION SECURITY SYSTEM

If the security system does not function in the correct way, check each component. If any anomaly is found, substitute the component.

DIODE

The diode **1** is situated under the ECM CPU.

- Remove the ECM CPU as described in Chapter C, by unscrewing the four relative fixings.
- Disconnect the diode.

Utilising a multi-tester, measure the voltage between the terminals as indicated in the following table.



Unit: V

Circuit tester – probe on:	Circuit tester + probe on:		
		1	**3**
	2		0,4÷0,6
	2	0,4÷0,6	

Circuit tester dial indication: diode test (+◄)

If the measurement of the circuit tester is less than 1.4V, substitute the battery of the multi-tester with the probes disconnected.

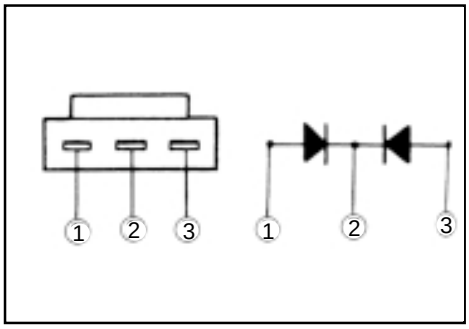

Downloaded from www.Manualslib.com manuals search engine

GEARCHANGE POSITION SWITCH

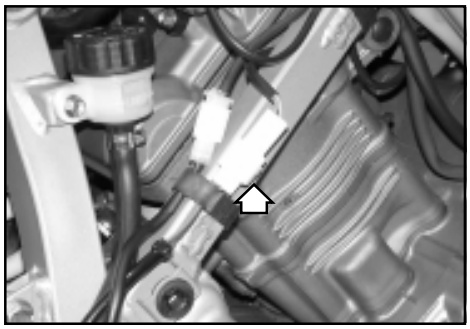

The lead connector of the gearchange position switch is situated underneath the right hand cover of the machine.

- Disconnect the lead of the gearchange position switch and check the continuity between the blue lead and Earth with gears in neutral.

	Blue	Green
ON (neutral)	○———	———○
OFF (neutral excluded)		

Make sure that the ignition switch is in the OFF position before connecting or disconnecting the coupling of the gearchange position switch. This is to avoid damage to electronic parts.

** When connecting a multi-tester to the system, install copper adaptors (external diameter less than 0.5 mm) on the rear side of the lead coupling. Connect the circuit tester probes to the copper adaptors.*

** Utilise copper adaptors of less than 0.5 mm diameter, to avoid damaging the rubber of the impermeable coupling.*

SIDE STAND SWITCH

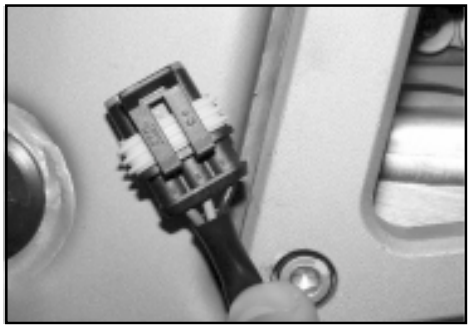

The side stand switch connector is situated underneath the seat compartment tray on the left hand side of the machine.

- Disconnect the side stand switch connector and check the continuity between the brown, green and black leads.

	Brown	Green	Black
ON (raised)	●———		———●
OFF (lowered)		●———	———●

If the measurement of the circuit tester is less than 1.4V, substitute the battery of the multi-tester with the probes disconnected.

Downloaded from www.Manualslib.com manuals search engine

INJECTION RELAY AND FUEL PUMP RELAY

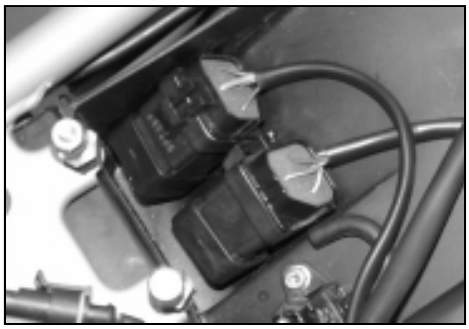

The injection relay and the fuel pump relay are situated in the compartment underneath the ECM CPU.

- Remove the injection relay or the fuel pump relay.

The injection relay and the fuel pump relay are the same but can be distinguished by the colours of the leads.

Injection relay lead colours: R/W, R/W, Y/Bk, R/Br.
Fuel pump relay lead colours: Gr/R, B/V, 0, Br.

GR/R: Grey/red
B/V: Blue/violet
O: Orange
BR: Brown
W/R: White/red
Y/Bk: Yellow/black
R/BR: Red/brown

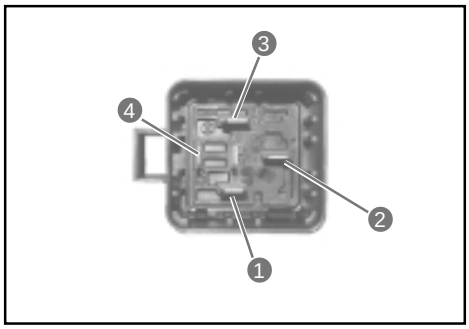

Firstly, check the isolation between terminals **2** and **4** with the circuit tester.
Apply 12 volts to terminals **1** and **3** and check the continuity between the terminals **4** and **2**. If there is no continuity, substitute the relay.

Downloaded from www.Manualslib.com manuals search engine

IGNITION SYSTEM

DESCRIPTION

The ECM CPU controls the ignition system. It is a normal transistorised digital ignition system that determines precise ignition timing according to the rpm of the engine, the gearchange position and the throttle position.

The system consists of a crankshaft position sensor (explorer coil), an ECM CPU, two ignition coils and two spark plugs.

1. The ignition coil feed is supplied by the battery via the side stand relay. This means that the ignition coil feed is controlled by the side stand position switch and the gearchange position switch.
2. The timing of the ignition is precisely controlled by the rpm of the engine and the throttle position. Apart from this basic condition, also the engine coolant temperature sensor influences the ignition timing when the temperature of the engine coolant is low and when the engine is switched on from cold by utilising the choke.
3. Ignition timing changes according to the gearchange position and the position of the throttle.

To switch the ignition system on or off, the following devices influence the ignition timing.

Crankshaft position sensor:
On the extreme left hand side of the crankshaft there is an explorer coil that produces a form of electrical wave when it comes into contact with the projection of the generator rotor.
The form of electrical wave generated is sent to the ECM CPU that calculates the rpm of the engine.
This signal determines the ignition timing and the signal that is sent to the revcounter.

This signal determines the ignition timing without calculating the signals under 700 rpm, because the rotation speed of the engine is constantly changing at low revolutions.
Above 700 rpm, the signal is processed by the ECM CPU and calculates the ignition timing with regards to the choke setting and the temperature of the engine coolant.
When the engine is switched on, the timing is calculated at 1° ATDC until 700 rpm.
If this signal is not sent to the ECM CPU, the ignition and injection systems do not function.

Throttle position sensor:
This sensor is situated in the carburettor and is a type of variable resistance sensor that changes the value of the resistance when the throttle is opened. On the basis of the signal received, the ECM CPU determines the ignition timing of the throttle by rpm of the engine.
The ignition conditions are determined by two factors: the throttle position and the rpm of the engine.

Gearchange position switch:
The gearchange position switch possesses a different resistance for each gear so that the ECM CPU is capable of determining the position of the gearchange. The ECM CPU varies the ignition timing when the position of the gearchange varies.

Engine coolant temperature sensor:
This sensor advances the ignition timing when the temperature of the engine coolant is less than 60°C. and when the choke functions with the butterfly valve closed.
The timing is advanced during the choke operation and gradually returns to normal when the temperature of the engine coolant increases.

Downloaded from www.Manualslib.com manuals search engine

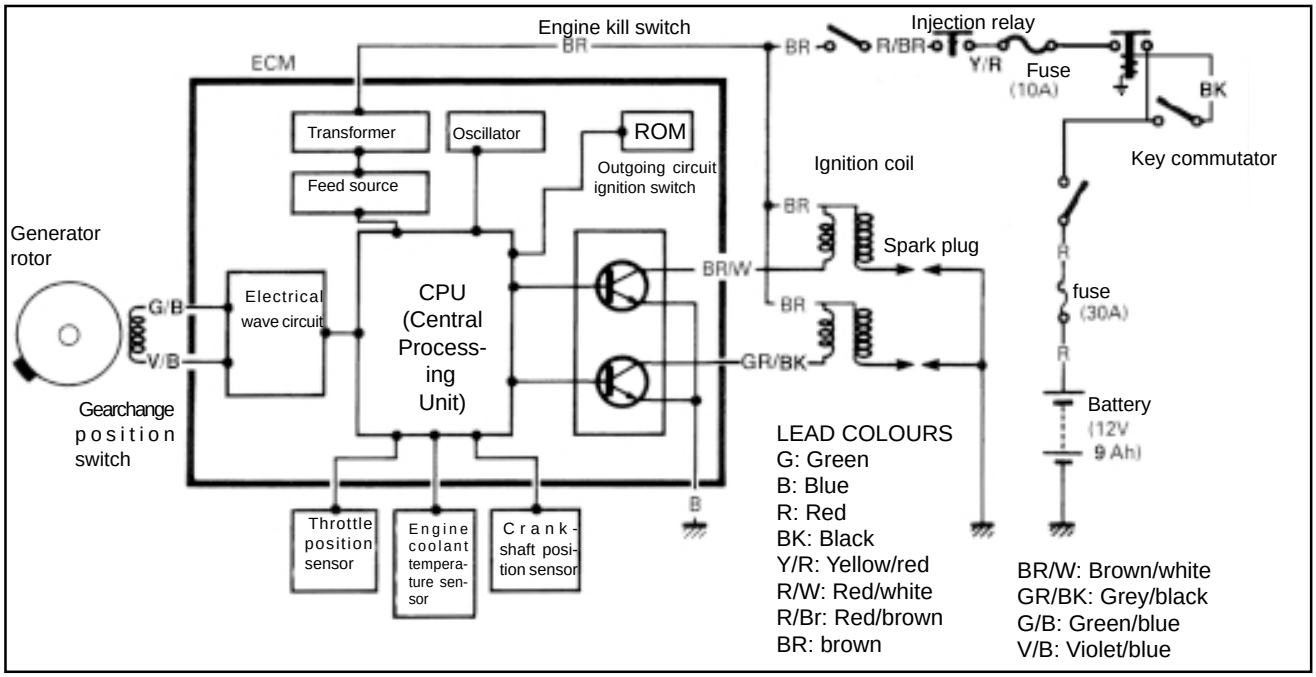

The ignition interruption circuit is incorporated in the ECM CPU to avoid over-revving the engine. When the engine reaches 10,200 rpm, this circuit cuts out the primary current of the ignition to both spark plugs.

The engine could function without load at more than 10,200 rpm, even if the interruption circuit is functioning. But this could cause damage to the engine. Never exceed 10,200 rpm without a load.

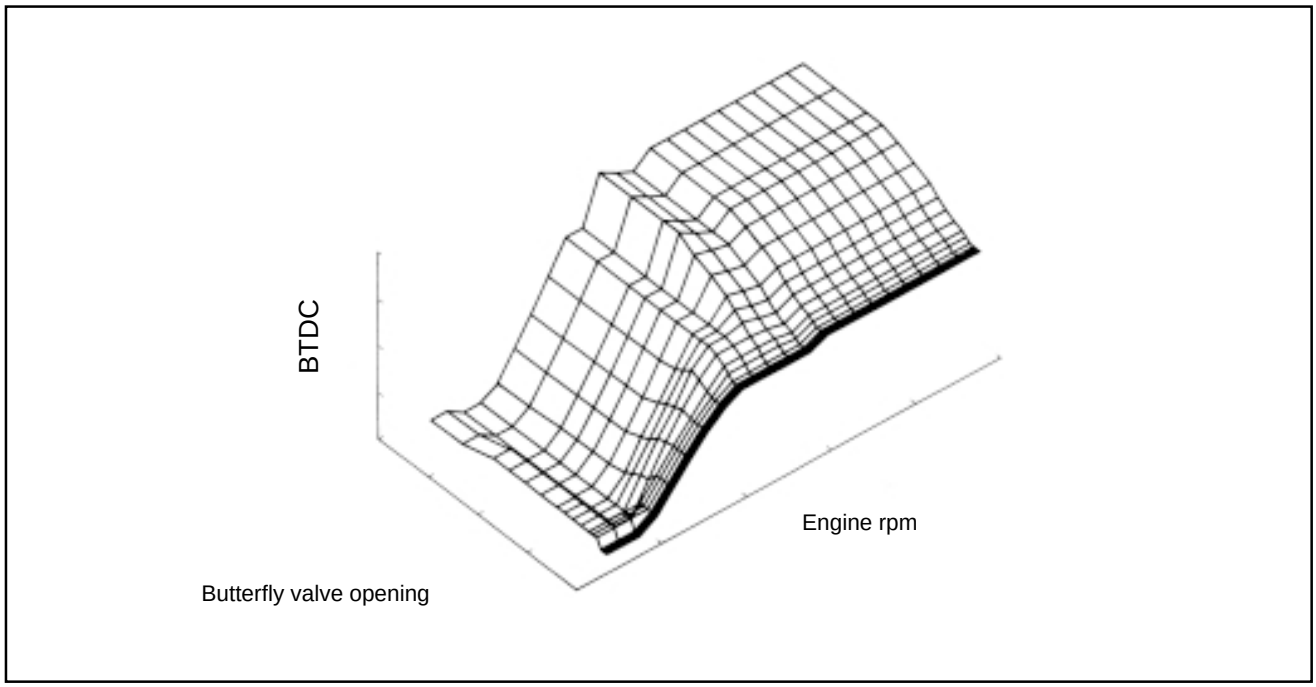

Downloaded from www.Manualslib.com manuals search engine

DIAGNOSTICS

* Check that the gearchange is in neutral and the engine kill switch is in the “RUN” position. Check to see if the fuse is blown and the battery is completely charged before carrying out diagnostic operations.

Worn or non-firing spark plugs

Check to see if the connectors of the ignition system are connected correctly.
- Loose → • Poor or defective coupling connection.
- Correct ↓

Check the battery voltage between the incoming lead (B/R and B) on the ECM CPU with ignition switch turned to the “ON” position.
- Incorrect → • Defective ignition switch
  • Wiring interrupted or poor or defective connection of the appropriate circuit coupling.
- Correct ↓

Test the peak voltage of the primary winding of the ignition coil.

This method of testing is only possible utilising a multi-tester and a peak voltage adaptor.
- Correct → Check the spark plugs.
  - Correct ↓
  - Incorrect → • Defective spark plug.
- Incorrect ↓ • Poor or defective connection of the spark plug insulated cover.

Check the ignition coil.
- Incorrect → • Defective ignition coil.
- Correct ↓

Test the peak voltage of the crankshaft position sensor and the resistance.

The peak voltage test of the crankshaft position sensor can only be carried out with a multi-tester and a peak voltage adaptor.
- Incorrect → • Defective crankshaft position sensor.
- Correct ↓ • Defective ECM CPU.
  • Poor or defective connection of the ignition couplings.

Downloaded from www.Manualslib.com manuals search engine

TEST

PEAK VOLTAGE OF THE PRIMARY WINDING OF THE IGNITION COIL

- Remove the insulated covers of the two spark plugs as described in pages B-7 and B-8.
- Connect two new spark plugs to the insulated covers and then connect them to Earth.

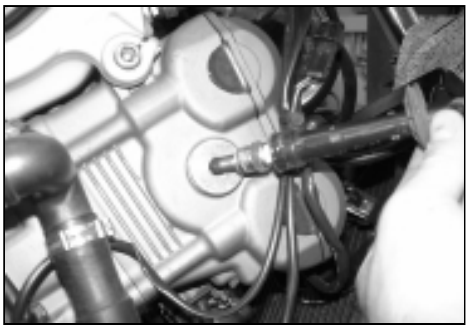

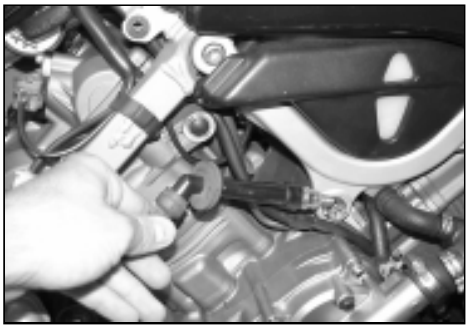

Check that the connectors and the spark plugs are connected correctly and that the battery is fully charged.

Test the peak voltage of the primary winding of the N° 1 ignition coil using the following procedure.

- Connect the multi-tester to the peak voltage adaptor in the following way.

N° 1 ignition coil: BR/W or GR/BK - Earth
(probe **+**) (probe **-**)

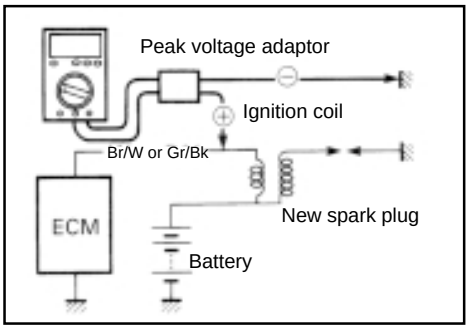

Do not disconnect the lead of the ignition coil primary winding.

Follow the instruction manual when using the multi-tester with the peak voltage adaptor.

- Put the gearchange into neutral and turn the ignition switch to the "ON" position.
- Turn the engine over for several seconds pressing the starter button and measure the peak voltage of the ignition coil primary winding.
- Repeat this test several times and measure the highest peak voltage of the ignition coil primary winding.

Circuit tester dial indication: Voltage (⎓)
Ignition coil primary winding peak voltage: More than 280V

To avoid electric shock, do not touch the probes of the circuit tester and the spark plugs during this test.

Downloaded from www.Manualslib.com manuals search engine

Test the peak voltage of the N° 2 ignition coil primary winding following the same procedure used for the N° 1 ignition coil.
N° 2 ignition coil: GR/BK terminal – Earth
(probe +) (probe -)

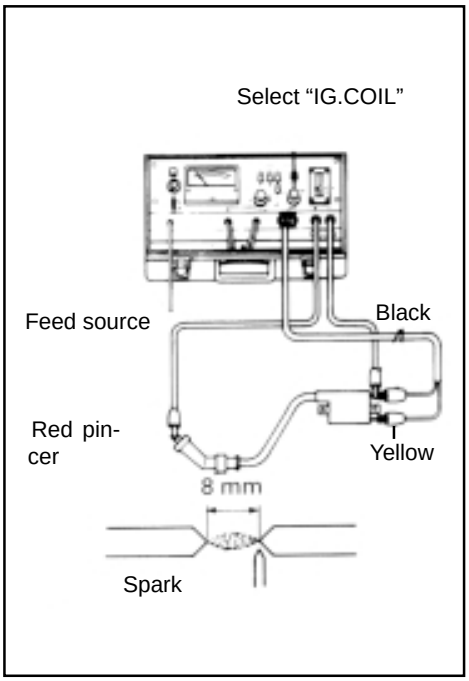

Do not disconnect the lead of the ignition coil primary winding.

Circuit tester dial indication: Voltage (⎓)
Ignition coil primary winding peak voltage: More than 280V

If the peak voltage is less than specified, test the ignition coil, the crankshaft position sensor and the ECM CPU.

IGNITION COIL (check with an electrical circuit tester)
- Remove the ignition coil.

Make sure that the gap of the three spark electrodes of the electrical circuit tester is 8 mm.

- Using the circuit tester, test the spark performance of the ignition coil. The connections for the test are as indicated in the figure.

If there are no sparks or the sparks are orange in the above mentioned conditions, the ignition coil must be defective.

Spark: More than 8 mm.

To avoid electric shocks, do not touch the pincers during the test.

Follow the instruction manual when using the electrical circuit tester.

IGNITION COIL RESISTANCE
- It is possible to use an ampmeter instead of the electrical circuit tester. In both cases, test the continuity of the primary and secondary winding of the ignition coil. Exact measurement of the resistance is not necessary, but if the windings are in good condition, the continuity will be indicated by approximate measurements.

Downloaded from www.Manualslib.com manuals search engine

Ignition coil resistance
Primary winding: 3-5 Ω (pole (+) -(pole (+)
Secondary winding: 20-28 kΩ
(spark plug cover – pole +)

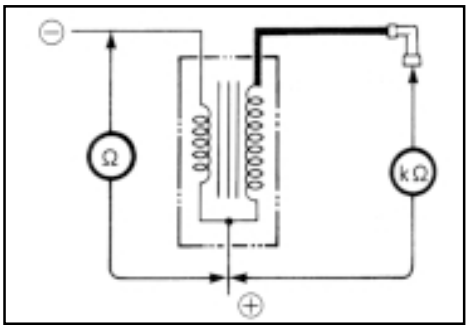

CRANKSHAFT POSITION SENSOR
(Multi-tester check)

- Remove the seat.
- Remove the under seat compartment tray.
- Disconnect the connector **1** from the ECM CPU.

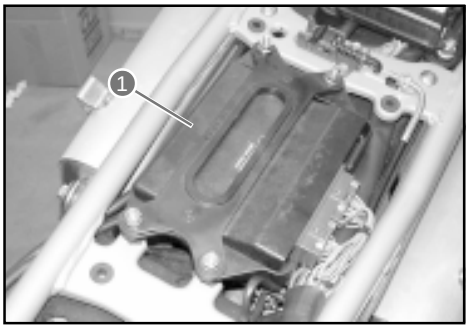

Check that all couplings are connected correctly and the battery is fully charged.

Check the peak voltage of the crankshaft position sensor between the green/blue lead and the violet/blue lead at the ECM CPU coupling.

- Connect a multi-tester with peak voltage adaptors in the following way.

Green/blue (+ probe) – Violet/blue (- probe)

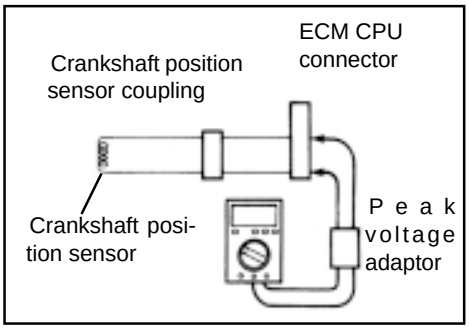

Follow the instruction manual when using the multi-tester with the peak voltage adaptor.

- Put the gearchange into neutral and turn the ignition switch to the "ON" position.
- Turn the engine over for several seconds by pushing the starter button and measure the peak voltage of the crankshaft position sensor.
- Repeat the abovementioned procedure several times and measure the highest peak voltage of the crankshaft position sensor.



Circuit tester dial indication: Voltage (⎓)
Crankshaft position sensor peak voltage:
More than 4.0V (Green/blue and violet/blue)

If the peak voltage measured at the ECM CPU lead coupling is less than the specified value, check the peak voltage at the lead coupling of the crankshaft position sensor as follows.

Downloaded from www.Manualslib.com manuals search engine

- Remove the right hand frame cover
- Disconnect the lead coupling of the crankshaft position sensor **1** and connect the multi-tester with the peak voltage adaptor.

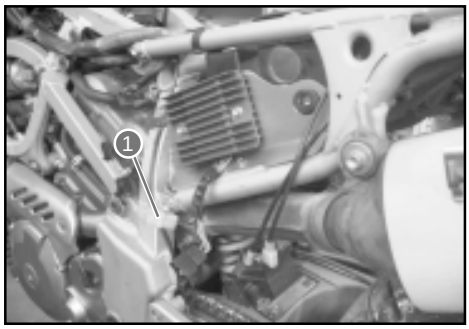

Green/blue (+ probe) – Violet/blue (- probe)

- Measure the peak voltage of the crankshaft position sensor using the same procedure utilised for the measuring at the lead coupling of the ECM CPU.

Circuit tester dial indication: Voltage (⎓)
Crankshaft position sensor peak voltage:
More than 4.0V (Green/blue Violet/blue)

If the peak voltage at the lead coupling of the crankshaft position sensor is normal, but the peak voltage at the lead coupling of the ECM CPU is abnormal, the wiring must be substituted. If both peak voltages are abnormal, substitute the crankshaft position sensor and carry out the test again.

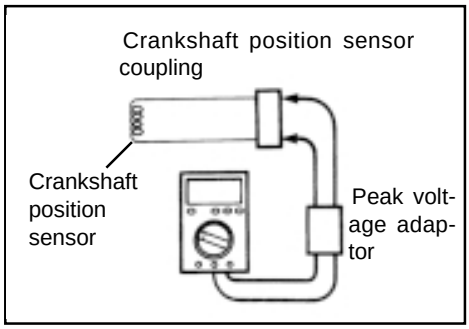

CRANKSHAFT POSITION SENSOR RESISTANCE

- Remove the tail fairing and disconnect the lead coupling.
- Measure the resistance between the leads and Earth. If the resistance is not as specified, the crankshaft position sensor must be substituted.

Crankshaft position sensor resistance:
184-276 Ω (GR/BR and P/BK)
Ω (Blue – Earth)

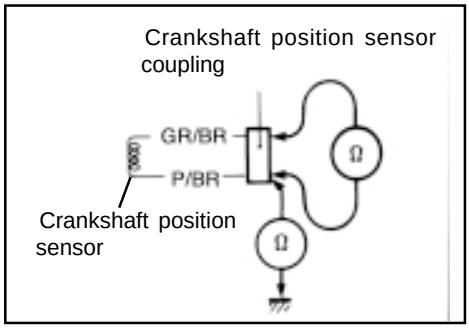

See page D-138 for the substitution of the crankshaft position sensor.

SPARK PLUG
See pages B-8 and B-9.

Downloaded from www.Manualslib.com manuals search engine

INSTRUMENTS

REMOVAL

- Remove the nose fairing and the instrument panel as described in Chapter B.



- Raise up the instrument panel, freeing it from the anti-vibration mountings.
- Disconnect the lead coupling.



When connecting or disconnecting the instrument panel, make sure that the ignition switch is in the in the "OFF" position. This is to avoid damaging electronic parts.

DISASSEMBLY

- Disassemble the instrument panel as follows.

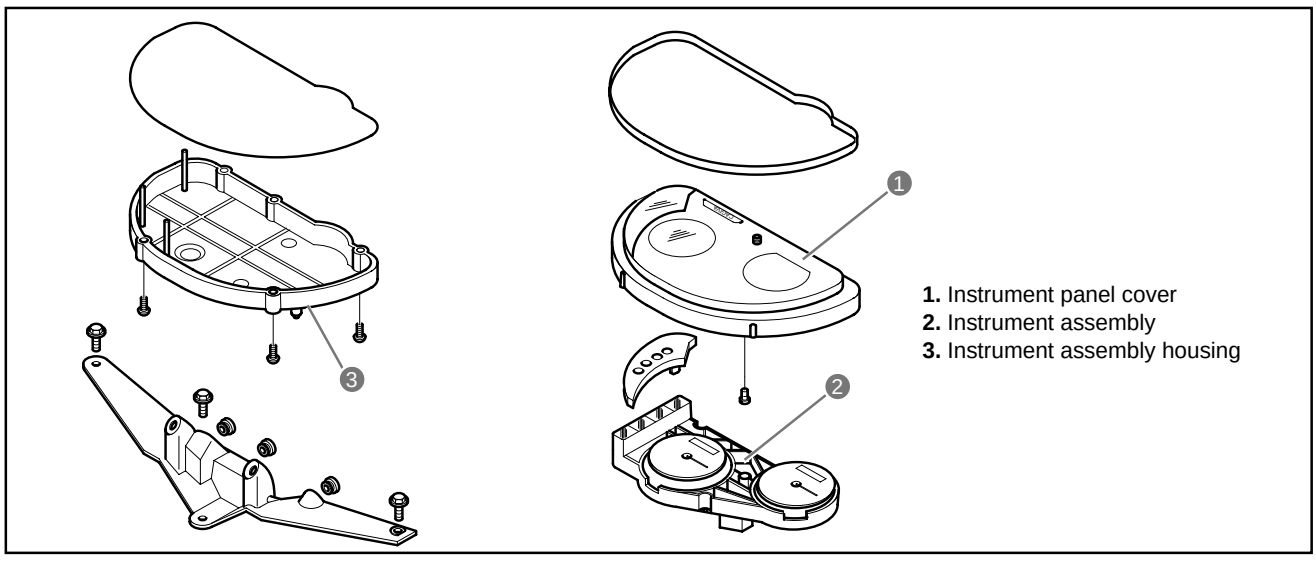

1. Instrument panel cover
2. Instrument assembly
3. Instrument assembly housing

Downloaded from www.Manualslib.com manuals search engine

CHECK

Using a circuit tester, check the continuity between the indicated terminals in the following diagram. If the measurement of the continuity is not correct, remove and check the bulb.
If the bulb is blown, replace with a new bulb and recheck the continuity. If the bulb is OK, substitute the instrument assembly.

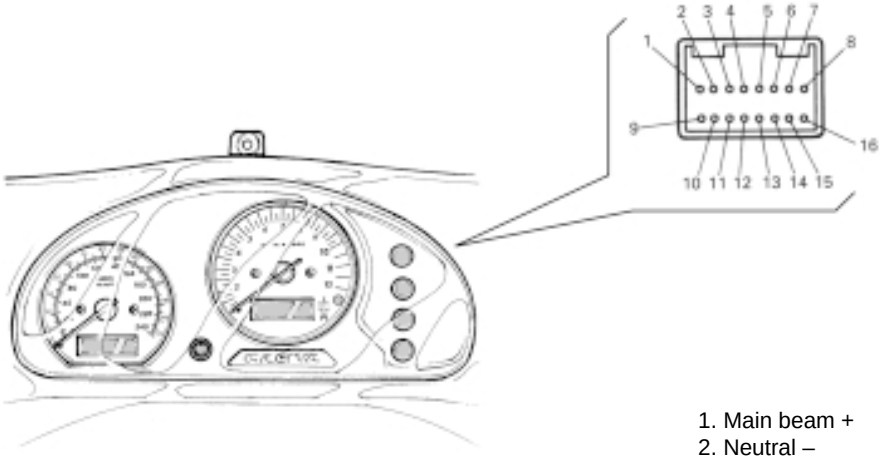

PART	+ probe of the circuit tester on	- probe of the circuit tester on
MAIN BEAM	1	8
NEUTRAL	2	13
DIRECTION	10	8
INDICATORS (R), (L)	9	8
LIGHTS	3	8

1. Main beam +
2. Neutral –
3. Lights +
4. Fuel A
5. Fuel B
6. Oil
7. (FI)
8. Earth
9. Left hand direction indicators +
10. Right hand direction indicators +
11. Revcounter
12. Ignition +
13. Earth
14. Speed signal
15. Speed sensor +
(speed sensor feed +)

Downloaded from www.Manualslib.com manuals search engine

ENGINE COOLANT TEMPERATURE SENSOR AND INDICATOR CHECK

The LCD 1 (Liquid Crystal Display) and LED 2 (Light Emission Diode) in the revcounter dial supply the information about the engine coolant temperature. The checking procedure for this system is described as follows.

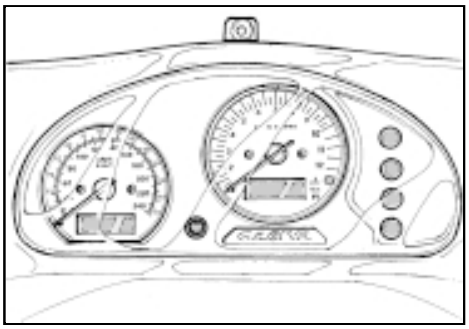

First phase:
- Disconnect the coupling of the oil pressure switch lead (see Chapter D).
- Disconnect the coupling of the engine coolant temperature sensor (see Chapter D).

To avoid damage to electronic parts, make sure that the ignition switch is turned to the "OFF" position before connecting or disconnecting the engine coolant temperature sensor leads.

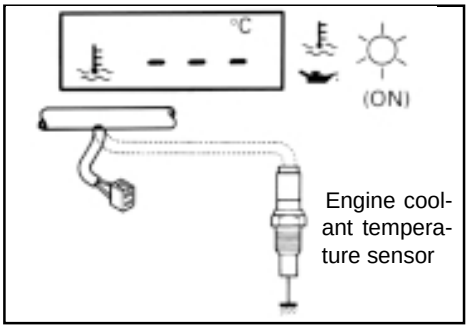

- Turn the ignition switch to the "ON" position. The LCD should indicate "– – –" without any numbers.

Second phase:
- Turn the ignition switch to the "OFF" position.
- Connect a resistance of approximately 0.811 kΩ between the BR/BK lead and the BR/V lead coming from the main wiring circuit at the engine coolant temperature sensor coupling.
- Turn the ignition switch to the "ON" position. The LCD should indicate "50"°C and the LED should not be illuminated.

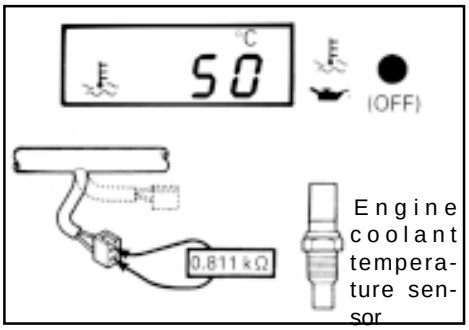

Third phase:
- Turn the ignition switch to the "OFF" position.
- Change the resistance to approximately 0.088 k .
- Turn the ignition switch to the "ON" position. The LCD should flash with the indication "130"°C and the LED should be illuminated.

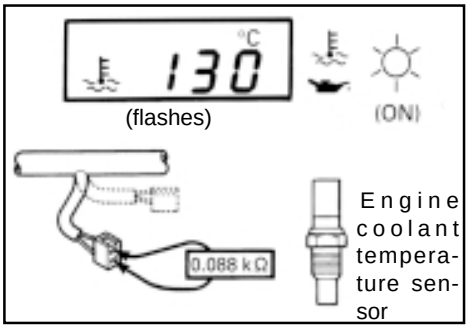

Fourth phase:
- Turn the ignition switch to the "OFF" position.
- Connect a jumper lead.
- Turn the ignition switch to the "ON" position. The LCD should flash with the indication "HI" and the LED should be illuminated.

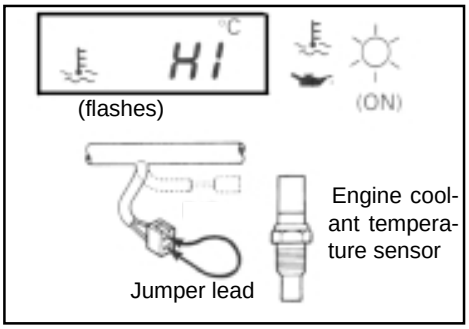

Downloaded from www.Manualslib.com manuals search engine

The following table indicates the relation of resistance between the LED and the LCD.

RESISTANCE	LED	LCD	
	OFF	"– – –"	ON
Approx. 0,811 kΩ	OFF	"50"°C	ON
Approx. 0,088 kΩ	ON	"130"°C	Flashes
With jumper lead	ON	"HI"	Flashes

If one or all of the indications are abnormal, substitute the engine coolant temperature sensor.

To carry out the engine coolant temperature sensor check, see page H-12.

FUEL RESERVE PROBE

The probe is mounted on the right hand fuel tank as shown in the figure. To carry out an electrical test on the probe, it must be dry (which means that the tank is empty).
Measure the resistance value using a circuit tester on the terminals of the probe.
Resistance: 750- 1100Ω (at a temperature of approximately 25°C.)



Downloaded from www.Manualslib.com manuals search engine

SPEEDOMETER CHECK

If the speedometer, kilometre counter or the partial kilometre counter do not function in the correct way, check the speedometer sensor and the coupling connections.
If the sensor and the connections are OK, substitute the speedometer.

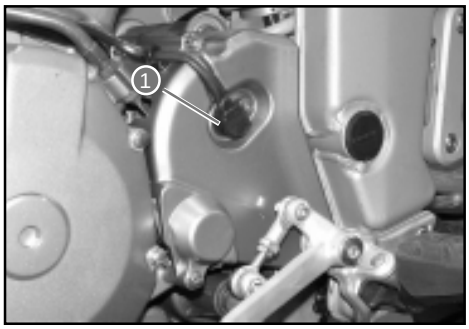

SPEEDOMETER SENSOR CHECK

- Disconnect the coupling of the speedometer sensor lead.
- Remove the speedometer sensor **1** by removing the mounting nut.
- Connect a 12V battery (between B/R and B/W), a 10 kΩ resistance (between B/R and B) and a multi-tester (+ probe to the B/R lead and the – probe to the B lead) as indicated in the figure.

B/R: Black with red line
B/W: Black with white line

Circuit tester dial indication: Voltage (⎓)

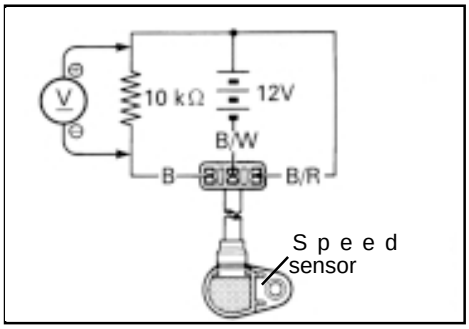

- In the abovementioned conditions, if a screwdriver that touches the speed sensor surfaces is removed, the indicated voltage of the circuit tester changes (0V→12V o 12V→0V). If the indicated voltage does not change, substitute the sensor.

The highest indicated voltage of the circuit tester is the battery voltage.

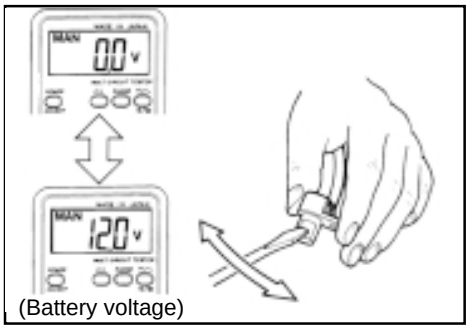

OIL PRESSURE WARNING LIGHT TEST

- Disconnect the coupling of the oil pressure warning light red lead.
- Turn the ignition switch to the “ON” position.
- Check to see if the oil pressure warning light lights up when a jumper lead is connected between the red lead coming from the main wiring system and Earth.

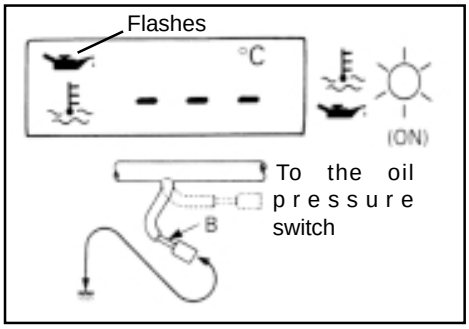

Downloaded from www.Manualslib.com manuals search engine

LIGHTS
HEADLIGHT

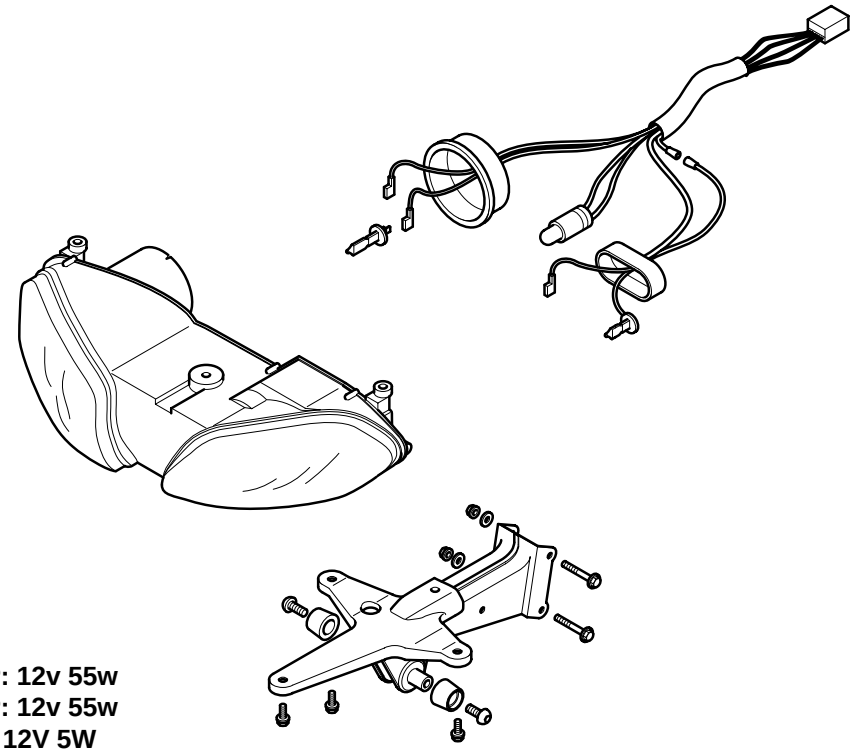

H1 HALOGEN LAMP: 12v 55w
H3 HALOGEN LAMP: 12v 55w
N° 3 Side light bulb: 12V 5W

Vertically and horizontally adjust the headlight after reassembly.

HALOGEN LAMP SUBSTITUTION

Remove the instrument assembly from its rubber supports.

- Remove the nose fairing and the windshield (see Chapter B) by unscrewing the six fixing screws.
- Remove the protective rubber cover **1** of the halogen lamp.
- Remove the contacts from the main beam lamp (right side) or disconnect the dipped beam lamp wiring (left side).
- Unhook the lamp retaining spring and remove the lamp from its housing.
- Substitute the lamp and commence the reassembly in the reverse order of removal.

To substitute the sidelight bulb, it is necessary to pull out the bulb holder **2** from the headlight housing. Extract the bulb, change it and reassemble in the reverse order of removal.

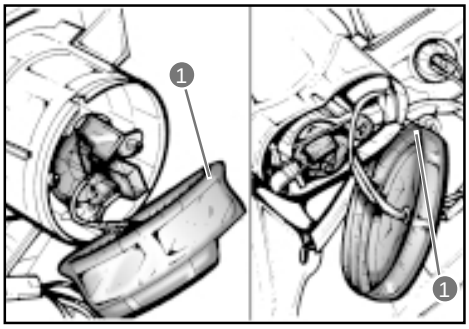

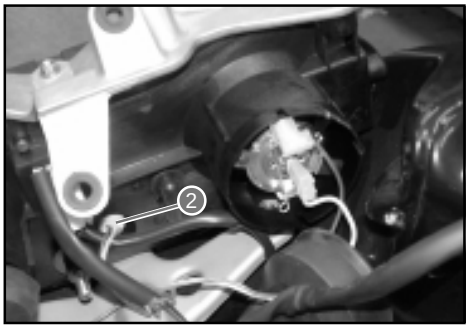

NEVER touch the glass part of the halogen lamps with bare hands.

Downloaded from www.Manualslib.com manuals search engine

INSTRUMENT PANEL BULB SUBSTITUTION

To gain access to the various warning light bulbs and the bulbs that illuminate the instruments, operate as follows:

- Remove the windshield and the nose fairing by unscrewing the six fixing screws.
- Extract the instrument panel from its anti-vibration housing and disconnect the electrical wiring.
- Open the instrument panel assembly by removing the 7 screws **1** indicated in the figure.
- Pull out the correct bulb holder, remove the blown bulb and substitute it.

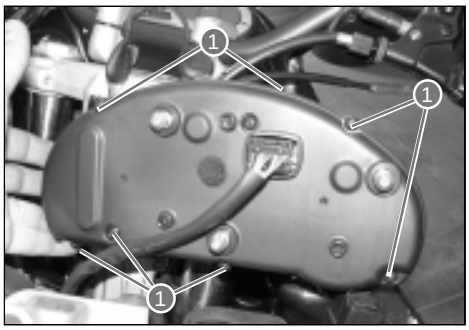

All the bulbs are of the bayonet fixing type.
Reassemble the instrument panel assembly in the reverse order of removal.

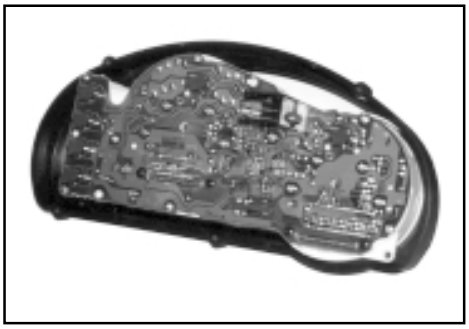

FRONT DIRECTION INDICATOR BULB SUBSTITUTION

To gain access to the direction indicator bulbs, it is necessary to remove the fuel tanks as described in Chapter B.
Carry out the bulb changes as follows:

- Disconnect the indicator lead from the main wiring circuit in the handlebar compartment.
- Remove the screws **2** that fix the indicator body inside the fuel tank.
- Slide out the indicator body.
- Remove the two screws **3** that fix the lens to the indicator body.
- Remove the lens and substitute the blown bulb.
- Proceed with reassembly in the reverse order of removal.



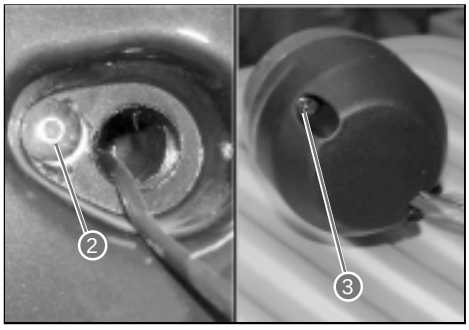

REAR LIGHT AND REAR DIRECTION INDICATOR BULB SUBSTITUTION

To gain access to the rear direction indicator bulbs, it is necessary to lever the lens out of its position by inserting a small screwdriver into the niche at the side of the lens **4**.
After having removed the lens, remove the bulb from its holder and substitute it.



Downloaded from www.Manualslib.com manuals search engine

To substitute the rear light bulb, it is necessary to remove the two screws **1**, by gaining access from the inside of the number plate holder.
Remove the lens from the outside and remove the bulb from its holder.
Substitute the blown bulb and reassemble.

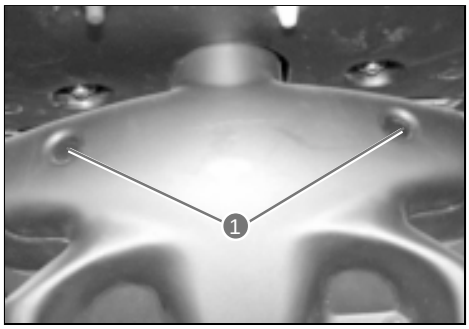

HEADLIGHT BEAM ADJUSTMENT

Periodically check the headlight beam for adjustment. Carry out the adjustment as follows:

- Place the machine 10 metres from a vertical wall.
- Ensure that the ground is level and that the headlight beam axis is perpendicular to the wall.
- The machine must be in a vertical position with the rider on board.
- Measure the height X of the centre of the beam from the ground.
- Mark a cross on the wall, at a height of 9/10ths of the X height;
- Switch on the main beam. The upper limit of the illuminated zone must be at a height not less than the cross marked on the wall previously (9/10ths of X).

Any adjustment necessary can be made by regulating the adjuster screw **2** on the back of the projector body.
This is done as follows:

- Remove the windshield, the nose fairing and the instrument panel as described in Chapter B.
- Make the adjustment using a screwdriver. Screwing in the adjuster, the band of light rises; unscrewing the adjuster, lowers the band of light.

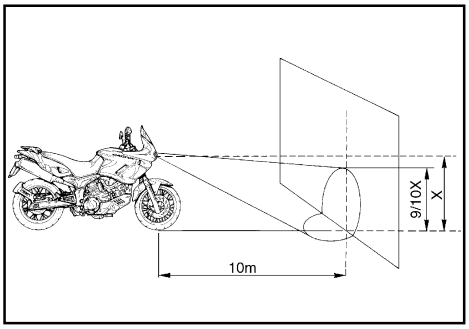

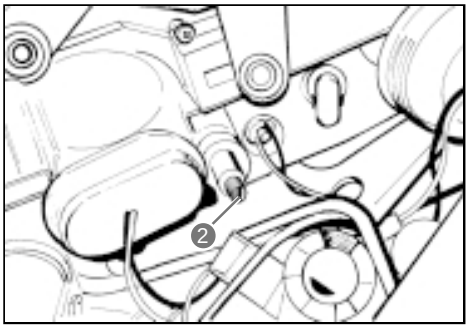

Downloaded from www.Manualslib.com manuals search engine

INJECTION RELAY

The lateral injection relay is situated underneath the ECM CPU.

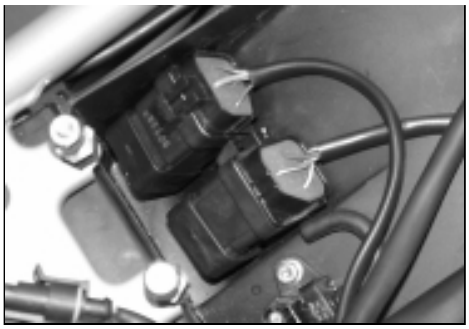

FUEL PUMP RELAY

The fuel pump relay is situated underneath the ECM CPU.

STARTER RELAY

The starter relay is situated underneath the rear cover of the parcel carrier.

DIRECTION INDICATOR RELAY

The direction indicator relay is situated underneath the rear cover of the parcel carrier. If the direction indicator does not light up, check the bulb, switch and connections of the circuit.
If the bulb, switch and circuit are OK, the direction indicator relay could be defective. Substitute it.

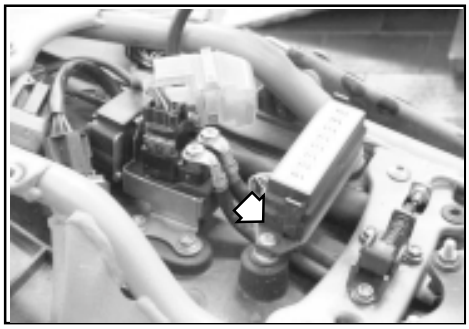

Check that the battery is fully charged.

Downloaded from www.Manualslib.com manuals search engine

SWITCHES

Check the continuity of each switch using a circuit tester. If there is any irregularity, substitute the respective switch assembly with a new one.

IGNITION SWITCH
(Per E-24)

Position \ Colour	O	Y	G/R	R
ON	○	○	○	○
OFF				
LOCK				

LIGHT SWITCH

Position \ Colour	O/Bl	Gr	O/R	Y/W
OFF				
•	○	○		
ON	○	○	○	○

LIGHT COMMUTATOR

Position \ Colour	Y/W	W	Y
HI	○		○
LO		○	○

DIRECTION INDICATOR SWITCH

Position \ Colour	Lg	Lbl	B
L		○	○
PRESS			
R	○	○	

HAZARD WARNING SWITCH

Position \ Colour	O/R	Y
•		
PRESS	○	○

ENGINE KILL SWITCH

Position \ Colour	O/B	O/W
OFF		
RUN	○	○

STARTER BUTTON

Position \ Colour	O/W	Y/G
•		
PRESS	○	○

HORN BUTTON

Position \ Colour	B/Bl	B/W
•		
PRESS	○	○

FRONT BRAKE SWITCH

Position \ Colour	B/Bl	B/R
OFF		
ON	○	○

REAR BRAKE SWITCH

Position \ Colour	B	B
OFF		
ON	○	○

CLUTCH LEVER POSITION SWITCH

Position \ Colour	B/Y	B/Y
OFF		
ON	○	○

OIL PRESSURE SWITCH

Position \ Colour	P	Earth
ON (Engine off)	○	○
OFF (Engine on)		

Before carrying out the oil pressure switch check, make sure that the level of oil is correct. (See page B-12.)

WIRING COLOURS

B: black
Lbl: Light blue
Lg: Clear green
Gr: Grigio
O: Orange
R: Red
Y: Yellow
P: Pink
W: White
B/Bl: Black with blue line
B/W: Black with white line
B/Y: Black with yellow line
B/R: Black with red line
O/B: Orange with black line
O/Bl: Orange with Light blue line
O/R: Orange with red line
O/W: Orange with white line
G/R: Green with red line
Y/G: Yellow with green line
Y/W: Yellow with white line

Downloaded from www.Manualslib.com manuals search engine

Downloaded from www.Manualslib.com manuals search engine

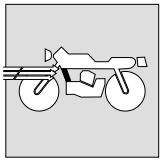

Section **H**

Downloaded from www.Manualslib.com manuals search engine

Cooling system H-3
Engine coolant H-5
Radiator and engine coolant tubes H-6
Cooling fan H-9
Fan thermal switch H-10
Engine coolant temperature sensor H-12
Thermostat H-13
Water pump H-14

Downloaded from www.Manualslib.com manuals search engine

COOLING SYSTEM

DESCRIPTION

The engine is cooled by an engine coolant that is pumped by force around the cooling system. The engine coolant passes through the water jackets that are present in the cylinders, the cylinder heads and the radiator. The type of pump used to pump the engine coolant around the cooling system is a high-pressure centrifugal pump. The radiator is made of aluminium that is light and readily dissipates heat. It is constructed of tubes and fins.

The thermostat is a wax pearl type thermostat and is supplied with a valve for the control of the flow of engine coolant on the basis of the temperature. The thermo-sensitive wax pearl activates the valve.

In the following figure, the thermostat is in the closed position and therefore the engine coolant circulates in a controlled condition according to the pump, the engine, the by-pass holes of the thermostat and the radiator.

When the temperature of the engine coolant reaches approximately 50°C. and the valve of the thermostat starts to open, a normal flow of engine coolant is created. At approximately 65°C., the thermostat opens completely and the major part of the heat is dissipated in the atmosphere via the radiator.

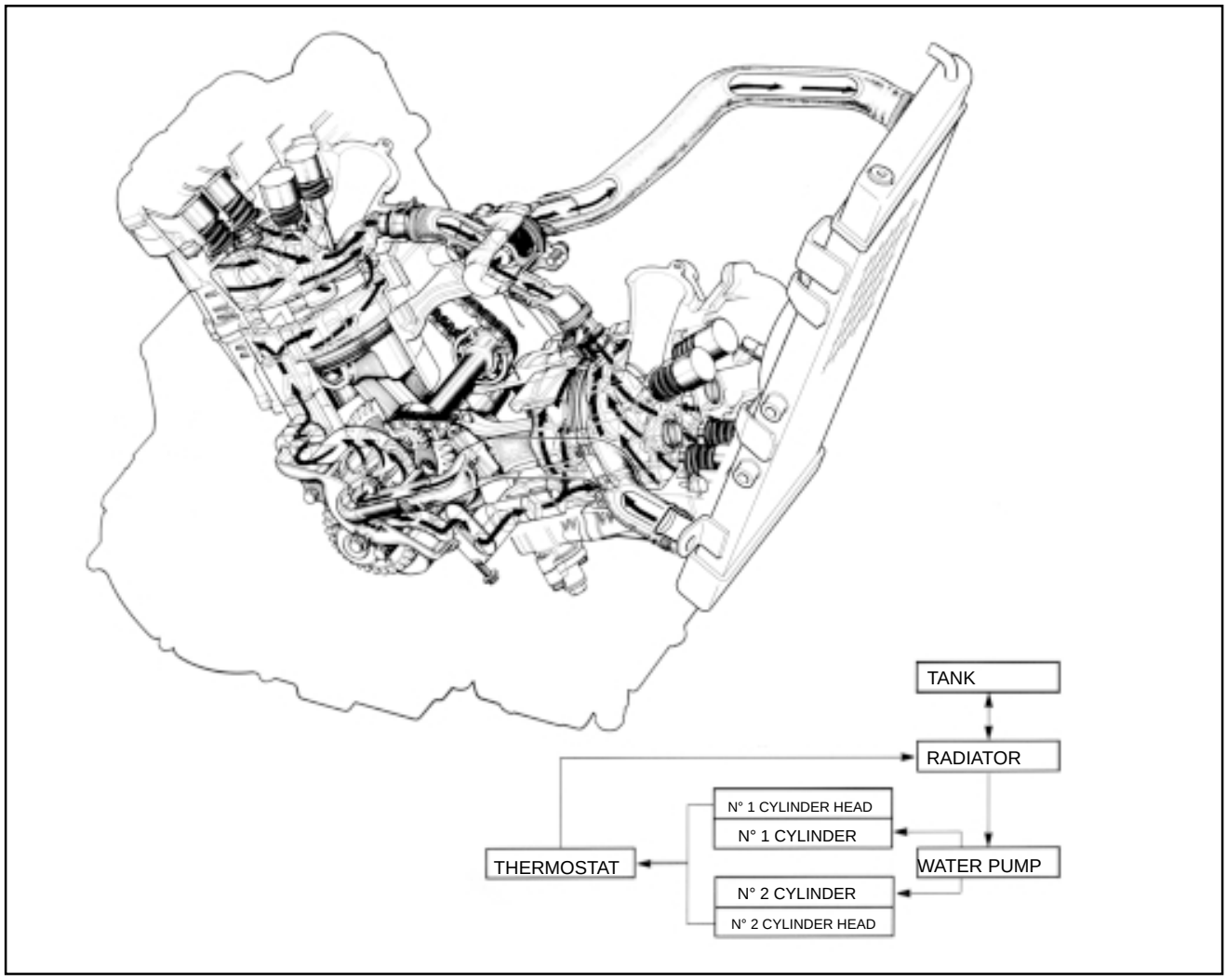

Downloaded from www.Manualslib.com manuals search engine

CONSTRUCTION

Torque pressure

PART	N·m	kg-m
A	6	0,6
B	8	0,8
C	6	0,6
D	18	1,8

1. Cooling fan
2. Thermostat housing
3. Radiator cap
4. Engine coolant tank
5. Thermostat
6. Radiator
7. Water pump

A. Cooling fan mounting bolt
B. Cooling fan thermal switch
C. Radiator mounting bolt
D. Engine coolant temperature sensor

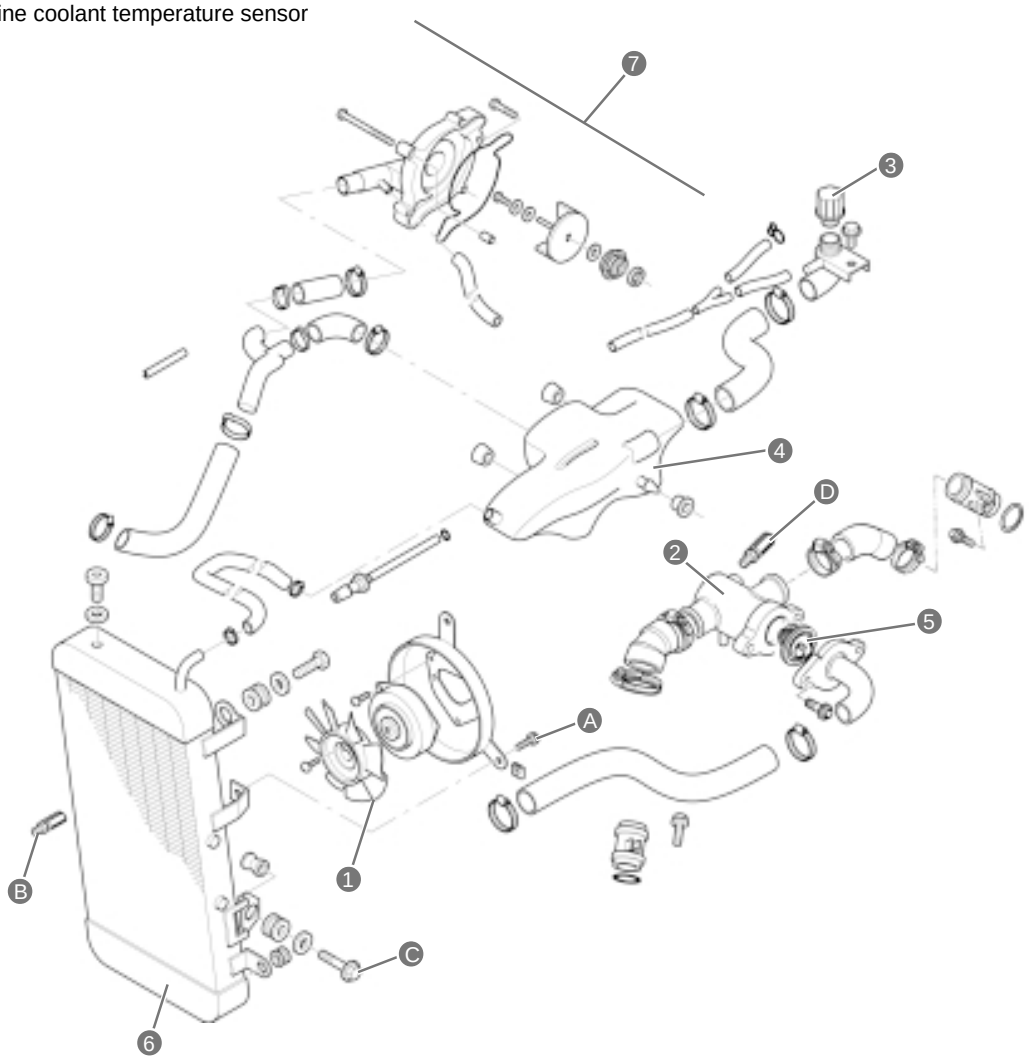

Downloaded from www.Manualslib.com manuals search engine

ENGINE COOLANT

The cooling circuit is filled with a 50/50 mixture of distilled water and ethyl-glycol antifreeze in the factory. This 50/50 mixture supplies an optimum protection against corrosion and the temperature. It also protects the system against freezing to –31°C.
If the machine is exposed to temperatures less than –31°C., the ratio of the mixture must be increased to 55% or 60% as indicated in the figure.

Antifreeze %age	Freezing point
50%	-31°C
55%	-40°C
60%	-55°C

- **Utilise a good quality ethyl-glycol mixed with distilled water. Do not mix with alcohol-based antifreeze or antifreeze of different makes.**
- **Do not use more than 60% or less than 50% of antifreeze in the mixture (see the figure on the right).**
- **Do not use additives to cure radiator leaks.**

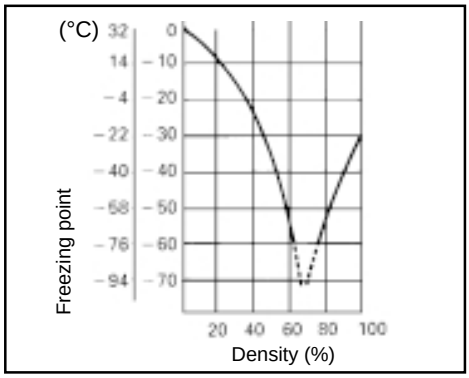

Fig. 1 Freezing point - engine coolant density curve

Engine coolant liquid 50% reserve included.

Antifreeze	1 000 ml
Distilled water	1 000 ml

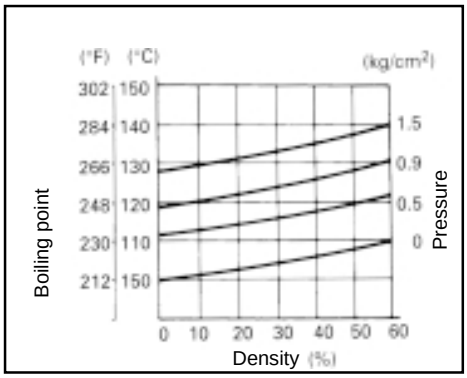

Fig. 2 Boiling point - engine coolant density curve.

*** If the radiator cap is removed whilst the engine is hot, the boiling liquid or vapour can cause serious burns. After allowing the engine to cool for a while, wrap the radiator cap in a thick cloth and remove the cap by unscrewing a quarter of a turn to unload the pressure. Afterwards, unscrew completely.**
*** The engine must be cold when maintenance is carried out on the cooling system.**
*** The engine coolant is dangerous:**
- **If it comes into contact with the skin or the eyes. Repeatedly rinse with abundant water.**
- **If it is swallowed, provocate vomiting and immediately call a doctor.**
- **Keep the engine coolant out of reach of children.**

Downloaded from www.Manualslib.com manuals search engine

ENGINE COOLANT - RADIATOR AND TUBES

REMOVAL



- Drain the engine coolant as described in Chapter B.

*** Do not open the cap of the radiator when the engine is hot. Boiling liquid or vapours can cause serious burns.**
*** The engine coolant is dangerous if swallowed or if it comes into contact with the skin or eyes. Rinse thoroughly with abundant water. If it is swallowed, provocate vomiting and immediately call a doctor.**

- Remove the radiator following the procedure outlined in pages C-54 and C-55.



Downloaded from www.Manualslib.com manuals search engine

RADIATOR CAP CHECK

Check the release pressure of the radiator cap utilising the appropriate tester as follows:

- Apply the cap to the tester as indicated and slowly create a pressure by activating the tester. Make sure to interrupt the pressure at 110 ±15 kPa (1.1 ±0.15 kg/cm^2) With the tester at stop, check that the pressure remains steady for 10 seconds. Substitute the cap if one or two of these requisites are not satisfied.

Radiator cap release pressure: 110 ±15 kPa (1.1 ±0.15 kg/cm^2)

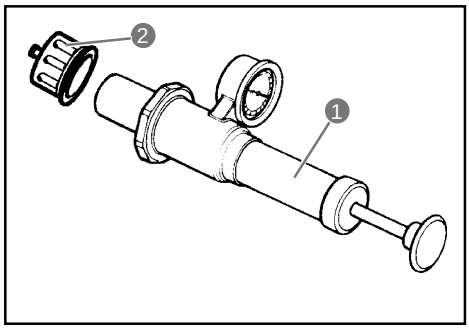

1. Radiator cap tester
2. Radiator cap

Downloaded from www.Manualslib.com manuals search engine

RADIATOR CHECK AND CLEANING

Dirt and foreign bodies embedded in the radiator must be removed. Compressed air is advisable for this type of cleaning. Bent or notched fins can be straightened with a little screwdriver.

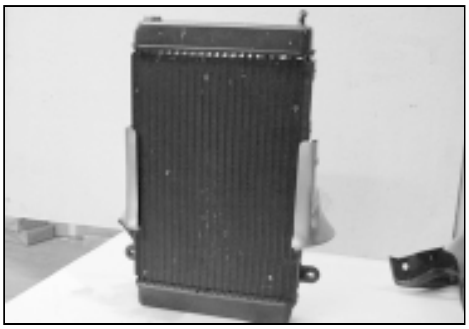

If it is necessary to substitute the radiator, release it from the two lateral protections, the anti-vibration supports, the cooling fan and the engine coolant temperature housing.

COOLING SYSTEM TUBES CHECK

If any tube of the cooling system is cracked, squashed or damaged, it must be substituted. Leaks where there are connections should be eliminated by tightening the relative ring clamps.

ASSEMBLY

The assembly of the radiator is carried out in the reverse order of removal. Take note of the following points:





RADIATOR MOUNTING BOLT

- Tighten the mounting bolt of the radiator to the specified torque.

Torque pressure:
Radiator mounting bolt **6 N-m (0.6 kg-m)**

- Make sure that the tubing of the cooling system is placed correctly.

- After reassembling the radiator, make sure that the engine coolant is topped up in the radiator (see page B-20 for further information on topping up).

Torque pressure:

Engine coolant drain plug	**(M6):**	**5.5 N.m (0.55 kg-m)**
Air bleed bolt	**(M8) :**	**13 N.m (1.3 kg-m)**

Downloaded from www.Manualslib.com manuals search engine

COOLING FAN

REMOVAL

- Remove the radiator.
- Remove the cooling fan by unscrewing the three screws indicated in the figure.

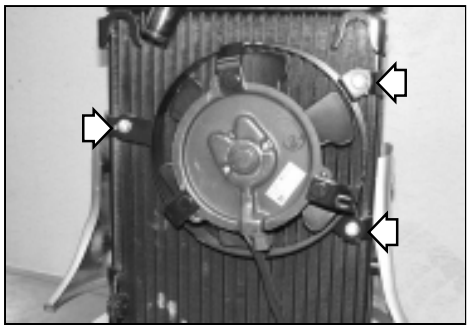

CHECK

- Remove the coupling of the cooling fan lead.

Check the charging current of the fan motor with an ampmeter as shown in the figure.
A voltmeter is used to check that the battery is correctly feeding the fan motor at 12V. When the fan is turning at maximum speed, the ampmeter should indicate not more than 5 amps.
If the motor does not turn, substitute the motor assembly of the fan.



It is not necessary to remove the cooling fan from the motor to carry out the abovementioned test.

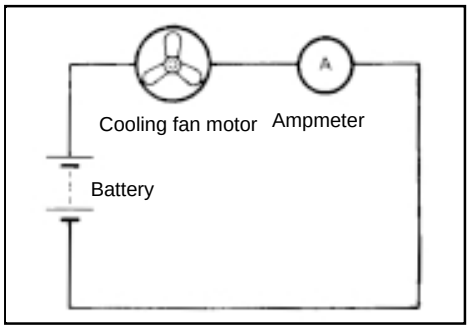

REASSEMBLY

Reassemble the radiator and the cooling fan in the reverse order of removal. Be careful of the following points:

FAN MOUNTING BOLTS

- Tighten the fan mounting bolts to the specified torque.

Torque pressure
Cooling fan mounting bolts 6 N.m (0.6 kg-m)

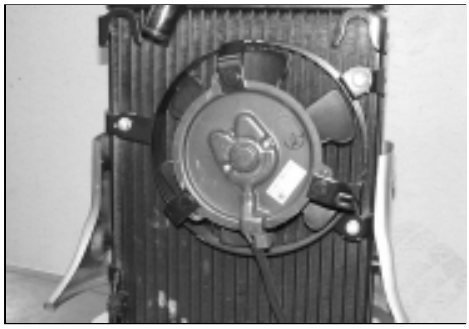

RADIATOR MOUNTING BOLTS

- Tighten the fan mounting bolts to the specified torque.

Torque pressure
Radiator mounting bolts 6 N.m (0.6 kg-m)

- Make sure the tubes of the cooling system are correctly placed.
- After reassembling the radiator, top up with engine coolant (see page D-20 for information on topping up).



Torque pressure

Engine coolant drain plug	**(M6):**	**6 N.m (0.6 kg-m)**
Air bleed bolt	**(M8):**	**6 N.m (0.6 kg-m)**

Downloaded from www.Manualslib.com manuals search engine

COOLING FAN THERMAL SWITCH

The cooling fan, positioned behind the radiator, is fixed to the radiator by three bolts. A thermal switch automatically controls the fan motor.
This switch remains open when the temperature of the engine coolant is low. It closes when the temperature of the engine coolant reaches approximately 105°C. and it activates the fan.

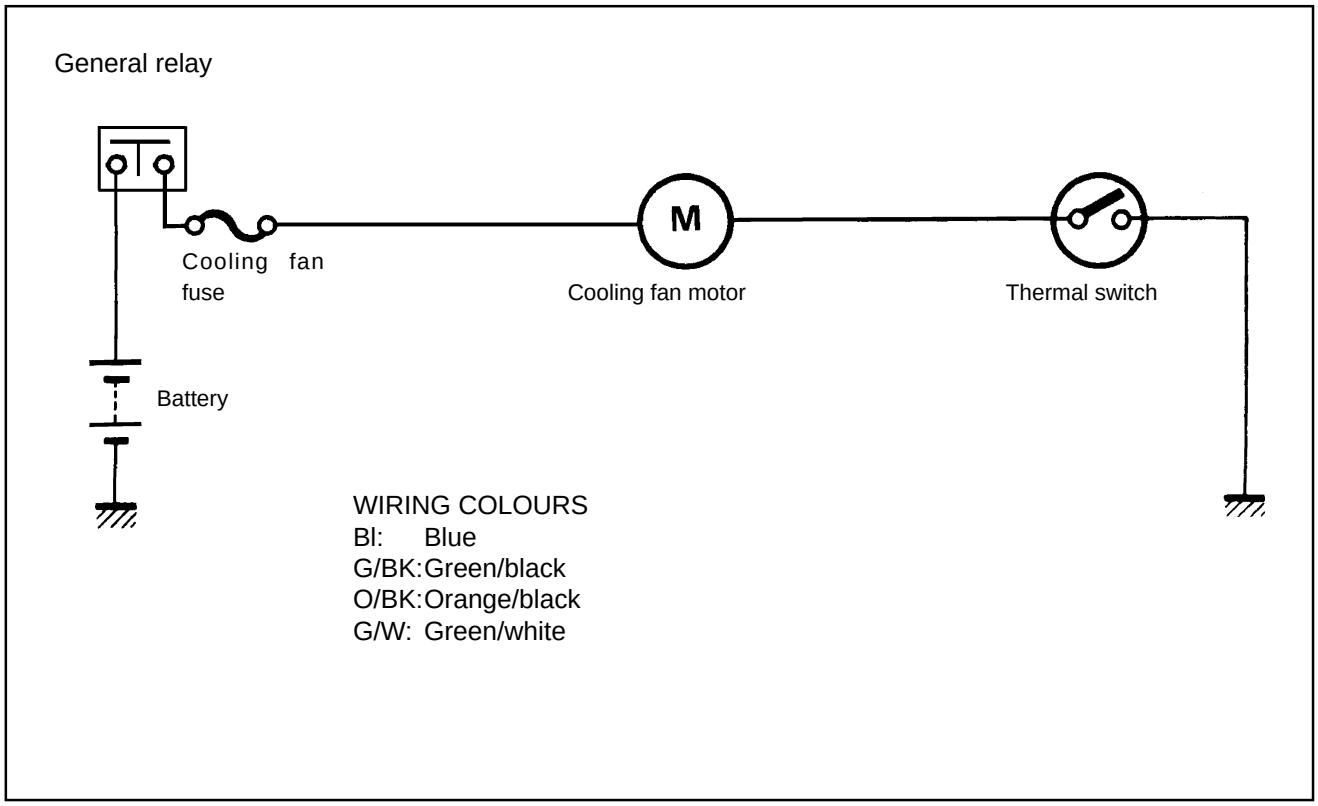

To remove the thermal switch it is necessary to firstly drain the engine coolant as described in page D-20.

- Disconnect the coupling of the thermal switch lead of the cooling fan.
- Remove the thermal switch of the cooling fan **1**.

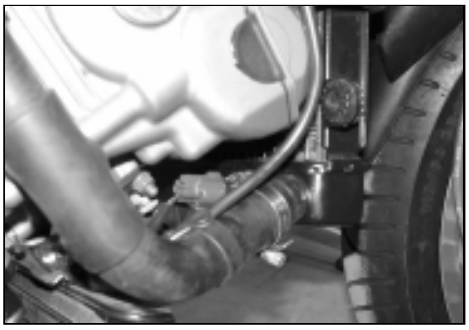

Downloaded from www.Manualslib.com manuals search engine

TEST

As shown in the figure, check that the thermal switch enters into the closing phase on reaching the specified temperature of 105°C.
Connect the thermal switch to a tester and immerse it in a pan of oil. Place the pan onto the lighted gas and heat the oil to slowly increase the temperature and observe the temperature of the thermometer when the switch closes.

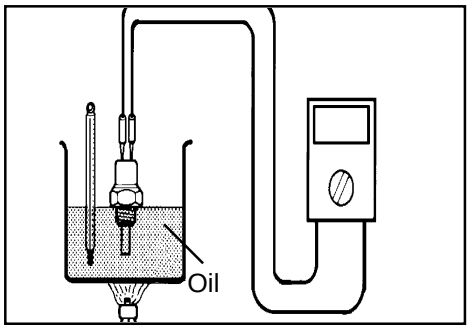

Tester dial indication: Continuity test (•)))

Thermal switch specification

OFF → ON	Approx. 105°C
ON → OFF	Approx. 100°C



ASSEMBLY

- Grease the O-ring.

Specified product: AGIP GREASE 30

- Tighten the thermal switch of the cooling fan to the specified torque.

Torque pressure:
Cooling fan thermal switch: 18 N.m (1.8 kg-m)

Be careful when handling the thermal switch. It could be damaged if dropped.

- After replacing the cooling fan thermal switch, top up the system with engine coolant (see page D-15 for further information on topping up).

Torque pressure:
Engine coolant drain plug (M6) : 5.5 N.m (0.55 kg-m)
Engine coolant drain plug (M6): 6 N.m (0.6 kg-m)
Air bleed bolt (M8): 6 N.m (0.6 kg-m)

Downloaded from www.Manualslib.com manuals search engine

ENGINE COOLANT TEMPERATURE SENSOR

REMOVAL



- Drain the engine coolant as described in page D-20.

*** Do not open the cap of the radiator when the engine is hot. Boiling liquid or vapours can cause serious burns.**
*** The engine coolant is dangerous if swallowed or if it comes into contact with the skin or eyes. Rinse thoroughly with abundant water. If it is swallowed, provocate vomiting and immediately call a doctor.**

To gain access to the engine coolant temperature sensor, it is necessary to remove various components (right hand engine frame support, expansion tank and attachments).

- The engine coolant temperature sensor can be removed from the side and in the conditions indicated in the figure by using a tube spanner.
- Disconnect the coupling from the leads.
- Remove the engine coolant temperature sensor **1**.

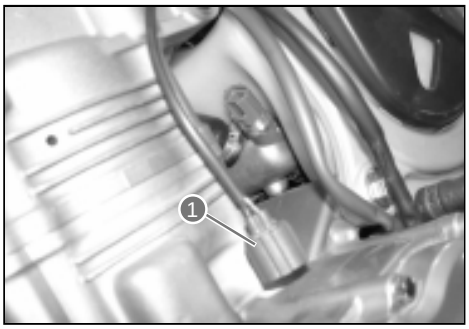

CHECK

Check that the resistance of the engine coolant temperature sensor changes with the temperature as specified. The sensor is mounted on the side of the thermostat housing. Carry out the test as follows: Connect the engine coolant temperature sensor to an ohmmeter and immerse it in a pan of oil. Place it onto the lighted gas and heat the oil to slowly increase the temperature and observe the temperature of the thermometer and the indication of the ohmmeter. If the resistance of the engine coolant temperature sensor does not change as indicated in the table, the sensor must be substituted.

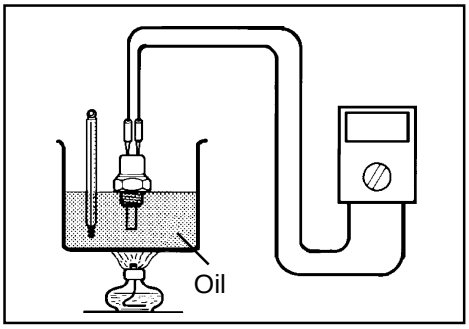

Temperature sensor specification

Temperature	Standard resistance
20°C	Approx. 2.45 Kohm
50°C	Approx. 0.811 Kohm
80°C	Approx. 0.318 Kohm
110°C	Approx. 0.142 Kohm
130°C	Approx. 0.088 Kohm

If the resistance is infinite or too different from that indicated, the engine coolant temperature sensor must be substituted.
To check the thermometer and the engine coolant temperature indicator, see Chapter G.

Downloaded from www.Manualslib.com manuals search engine

ASSEMBLY

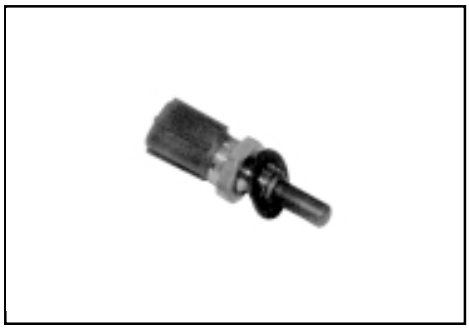

- Tighten the engine coolant temperature sensor to the torque specified.

Torque pressure:
Engine coolant temperature sensor 18 N.m (1.8 kg-m)

Be careful when handling the engine coolant temperature sensor. It could be damaged if dropped.

- After installing the engine coolant temperature sensor, top up the engine coolant system (see page B-15 for further information on topping up).

Torque pressure
Engine coolant drain plug (M6): 5.5 N.m (0.55 kg-m)
Air bleed bolt (M8): 13 N.m (1.3 kg-m)

THERMOSTAT

REMOVAL

- Drain the engine coolant as described in page B-20.

*** Do not open the cap of the radiator when the engine is hot. Boiling liquid or vapours can cause serious burns.**
*** The engine coolant is dangerous if swallowed or if it comes into contact with the skin or eyes. Rinse thoroughly with abundant water. If it is swallowed, provocate vomiting and immediately call a doctor.**

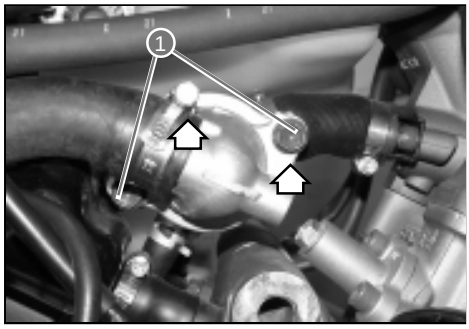

- Remove the left hand engine frame support (see page C-54).
- Remove the engine coolant tube and the two bolts **1** from the thermostat housing (see figure).
- Remove the bolts of the thermostat housing.
- Remove the thermostat.



Downloaded from www.Manualslib.com manuals search engine

CHECK

Check the pad of the thermostat for cracks.

Check the functioning of the thermostat as follows:

- Pass a piece of string through the flange as indicated in the figure.
- Immerse the thermostat in a heat-resistant glass of water as indicated in the figure. Check that the thermostat floats and then heat the water with a burner. Observe the increase in the temperature of the thermometer.
- Observe the temperature at the moment when the thermostat opens. The temperature should be as specified by the following values.

Standard
Thermostat valve opening temperature: 74.5 – 78.5°C.

- Continue to heat the water to increase the temperature.
- When the temperature of the water reaches the temperature specified, the thermostat valve should lift up at least 7 mm.

Standard
Lifting up of the thermostat valve: more than 7 mm at 90°C.

- If the thermostat does not operate correctly in either of the two cases (opening temperature and lifting up of the valve), it must be substituted.

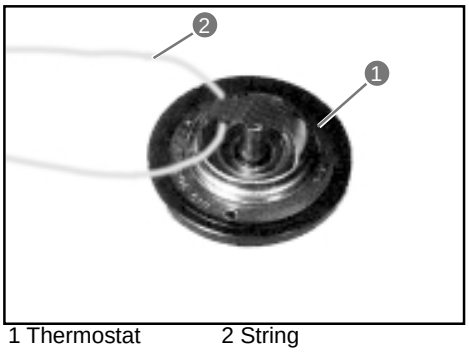

1 Thermostat 2 String

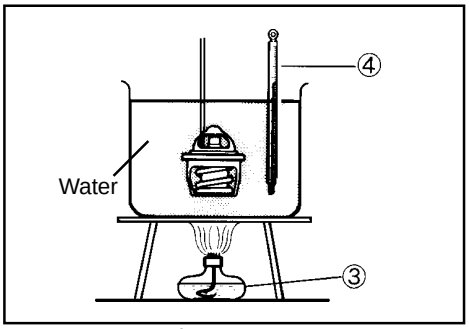

3 Burner 4 Thermometerz

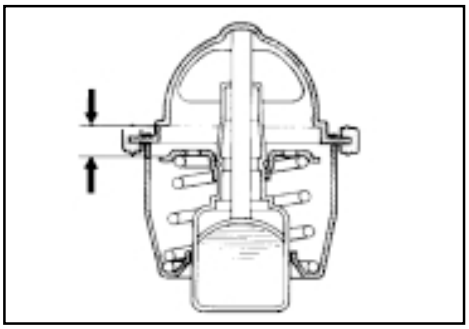



ASSEMBLY

Install the thermostat in the reverse order of removal.

- Grease the rubber seal of the thermostat.

Specified product: AGIP GREASE 30

- The hole for the bleeding of air **A** on the thermostat must be placed upwards.
- Make sure that the cooling circuit tubes are placed correctly and are not squashed or bent.
- After reassembling the thermostat, top up the system with engine coolant (see page B-20 for further information on topping up).

Torque pressure

Engine coolant drain plug	**(M6): 5.5 N.m (0.55 kg-m)**
Air bleed bolt	**(M8) : 13 N.m (1.3 kg-m)**

WATER PUMP

See pages D-123 to D-128 regarding the maintenance of the water pump.



Downloaded from www.Manualslib.com manuals search engine

Section

Downloaded from www.Manualslib.com manuals search engine

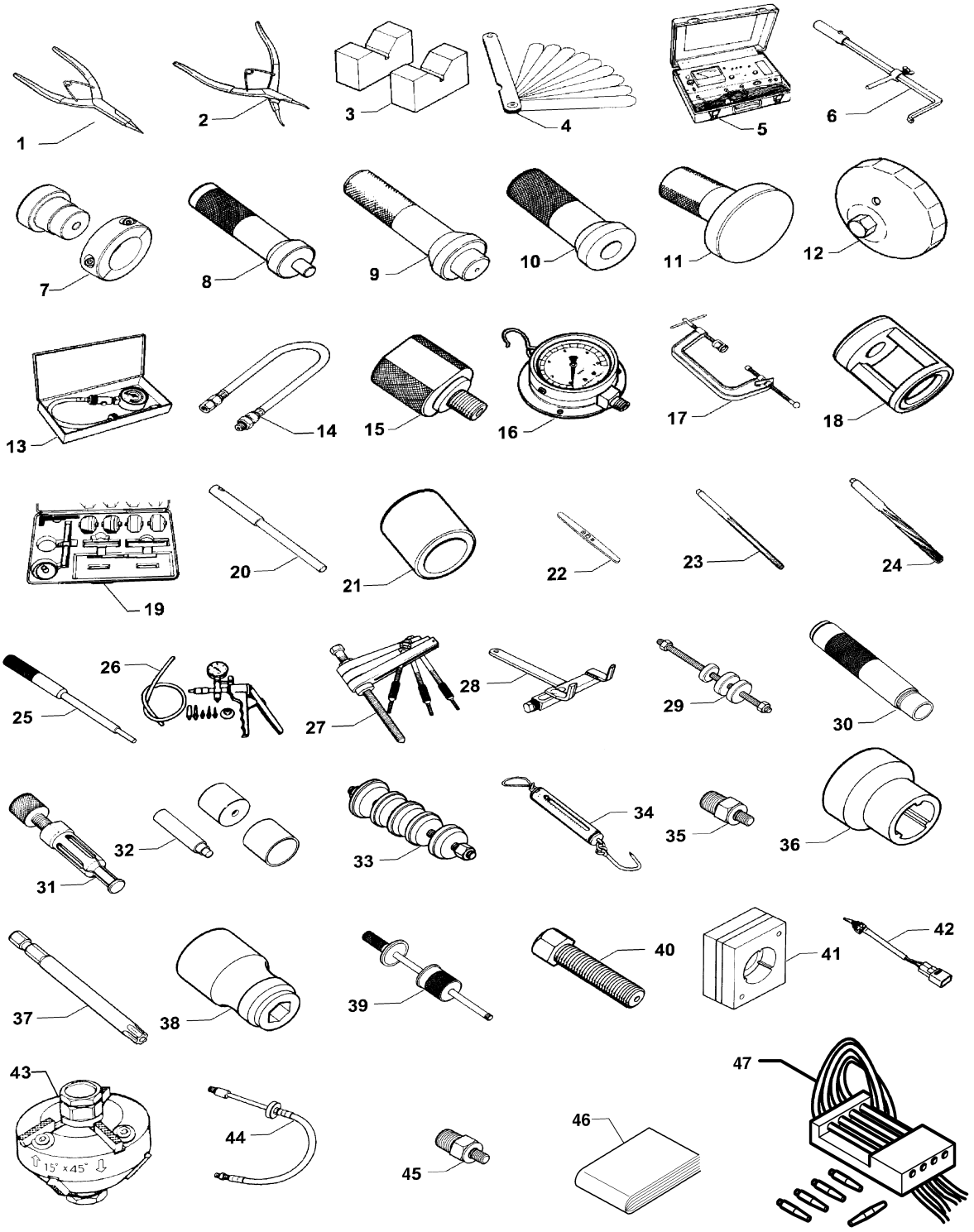

Downloaded from www.Manualslib.com manuals search engine

POS.	N. CODE	Q.TY	DESCRIPTION
1	800096765	1	Pincers for elastic rings
2	800096766	1	Pincers for elastic rings
3	800096650	1	“V” blocks
4	800096651	1	Feeler gauges
4	800096872	1	Feeler gauges
5	800096767	1	Tester
6	800096653	1	Gasket separator
7	800096654	1	Load bearing separator/assembler
8	800096655	1	Bearing separator
9	800096656	1	Bearing separator
10	800096657	1	Bearing assembler
11	800006658	1	Bearing assembler
11	800096873	1	Bearing assembler
12	800096659	1	Oil filter spanner
13	800096660	1	Compression meter
14	800096661	1	Oil pressure meter tube
15	800096663	1	Instrument (for high pressure)
16	800096663	1	Manometer
17	800096664	1	Valve spring compressor
18	800096665	1	Valve spring compression accessory
19	800096666	1	Valve seat grinding set
20	800096667	1	Valve seat grinding guide N-140-5.5
21	800096672	1	Valve assembly accessory
22	800096668	1	Reamer handle
23	800096669	1	Valve guide reamer (5.5 mm)
24	800096670	1	Valve guide reamer (10.8 mm)
25	800096671	1	Valve guide separator/assembler
26	800096673	1	Suction meter
27	800096674	1	Basic separator tools
28	800096675	1	Clutch hub sleeve support
30	800096680	1	Steering bearing assembler
31	800096676	1	Bearing extractor
32	800096677	1	Final transmission bearing separator/assembler
33	800096678	1	Bearing assembler set
34	800096689	1	Dynamometer
35	800096688	1	Fuel pressure sensor adaptor
36	800096686	1	Starter torque limiter attachment
37	800096681	1	Point JT 40 H
38	800096682	1	Point holder
39	800096679	1	Bearing assembler set
40	800096684	1	Rotor extractor
41	800096685	1	Starter torque limiter support
42	800096687	1	Switch
43	800096768	1	Valve seat grinding head
44	800096652	1	Compression sensor adaptor
44	800096683	1	Sliding shaft
45	800096662	1	Oil pressure meter adaptor
46	800095862	1	Raptor booklet
47	800097957	1	Carburettor balancing set

Downloaded from www.Manualslib.com manuals search engine

Downloaded from www.Manualslib.com manuals search engine

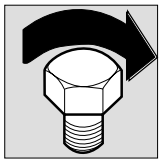

Section **L**

Downloaded from www.Manualslib.com manuals search engine

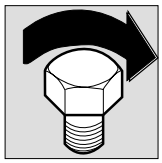

TORQUE PRESSURES

ENGINE

APPLICATION		N·m	Kg-m
Cylinder head valve cover bolt		14	1.4
Spark plug		11	1.1
Camshaft seat support bolt		10	1.0
Timing chain tension adjuster bolt	(F)	23	2.3
	[R]	7	0.7
Timing chain tension adjuster mounting bolt		10	1.0
Intermediate gear shaft/N° 2 timing sprocket		40	4.0
Timing chain tensioner mounting bolt		10	1.0
Cylinder head nut	(M8)	25	2.5
	(M6)	10	1.0
Cylinder head bolt	(M10)	42	4.2
	(M6)	10	1.0
Cylinder nut	(M6)	10	1.0
Engine coolant drain plug	(M6)	5.5	0.55
	(M8)	13	1.3
Air bleed bolt	(M8)	13	1.3
Impeller fixing bolt		8	0.8
Clutch housing nut		100	10.0
Clutch spring fixing bolt		10	1.0
Clutch spring support bolt		11	1.1
Oil pressure regulator		28	2.8
Intermediate gear shaft/N° 1 timing sprocket		70	7.0
Primary gear drive nut		95	9.5
Generator cover plug		15	1.5
Valve timing control plug		23	2.3
Generator rotor bolt		160	16.0
Starter engaging bolt		10	1.0
Generator stator fixing bolt		10	1.0
Generator stator clamp bolt		5.5	0.55
Camshaft position sensor fixing bolt		5.5	0.55
Gearchange selector stop bolt		10	1.0
Gearchange selector stop plate bolt		10	1.0
Gearchange arm stop bolt		23	2.3
Oil pressure switch		14	1.4
Cover bolt	(M6)	11	1.1
	(M8)	22	2.2
Oil drain plug	(M16)	35	3.5
	(M8)	10	1.0
Main oil passageway plug		23	2.3
Piston cooling oil jet bolt		8	0.8
Oil pump mounting bolt		10	1.0
Small end connecting rod bolt		80	8.0

Downloaded from www.Manualslib.com manuals search engine

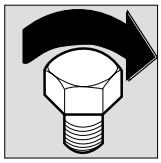

APPLICATION		N·m	Kg-m
Exhaust tube bolt		23	2.3
Cover bearing lock screw		8	0.8
Silencer mounting nut		23	2.3
Silencer joint nut		25	2.5
Oil tube junction bolt	(M12)	23	2.3
	(M14)	23	2.3
Speed sensor rotor bolt/engine pinion sprocket nut		13	1.3
Engine mounting blocking bolt	115	11.5	
Engine mounting bolt	23	2.3	
Engine thrust bearing adjuster	(M12)	93	9.3
	(M10)	55	5.5
Engine thrust bearing adjuster locknut	10	1.0	
Camshaft position sensor mounting bolt	45	4.5	
Cooling fan thermal switch	8	0.8	
Engine coolant temperature sensor	18	1.8	
Air intake air temperature sensor	18	1.8	
Fuel pressure control plug	18	1.8	
Fuel pressure control plug	10	1.0	

FRAME

APPLICATION	N·m	Kg-m
Engine/engine support rear fixing bolt	39.2/44.1	4/4.5
Engine/engine support front fixing bolt	44.1/49.05	4.5/5
Frame/engine plate fixing	44.1/49.05	4.5/5
Upper engine fixing	44.1/49.05	4.5/5
Lower engine fixing	44.1/49.05	4.5/5
Central engine fixing	44.1/49.05	4.5/5
Left hand front support fixing	44.1/49.05	4.5/5
Right hand front support fixing	44.1/49.05	4.5/5
Spacer fixing	8.8/9.8	0.9/1
Seat frame fixing	21.5/23.5	2.2/2.4
Front frame fixing	21.5/23.5	2.2/2.4
Front footrest support fixing	23.5/25.4	2.4/2.6
Rear footrest support fixing	24.5/29.4	2.5/3
Roller fixing	21.5/23.5	2.2/2.4
Roller fixing	8.8/9.8	0.9/1
Shoe fixing	8.8/9.8	0.9/1
Side stand rotation	Torque controlled	
Pivot locking	4.9/6.8	0.5/0.7
Switch fixing	8.8/9.8	0.9/1
Fuel tap flange fixing	5.46/7.84	0.6/0.8
Fuel tap flange fixing	5.46/7.84	0.6/0.8
Seat torque fixing	8.8	0.9
Ignition switch fixing	9.8/11.7	1/1.2

Downloaded from www.Manualslib.com manuals search engine

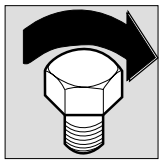

APPLICATION	N·m	Kg-m
Latch bolt fixing	5.46/7.84	0.6/0.8
Carrier fixing	9.8/11.7	1/1.2

HANDLEBAR COMMANDS

APPLICATION	N·m	Kg-m
Counterweight fixing	2.9	0.9
U bolt fixing	4.9/6.8	0.5/0.7
Clamp fixing	4.9/6.8	0.5/0.7
Oil tank fixing	8.8/9.8	0.9/1
Cable-feed fixing	8.8/9.8	0.9/1
Brake pump fixing	8.8/9.8	0.9/1
Tank fixing	8.8/9.8	0.9/1
Fastener band fixing	8.8/9.8	0.9/1
Transmission lever fixing	8.8/9.8	0.9/1
Small rod fixing	8.8/9.8	0.9/1
Drilled bolt	19.6/24.5	2/2.5
Gearchange/brake pedal fixing	21.5/23.5	2.2/2.4
Transmission guide plate fixing	8.8/9.8	0.9/1
Stop switch	19.6/24.5	2/2.5
Brake pedal pump	8.8/9.8	0.9/1
Gearchange/brake pedal	14.7/19.6	1.5/2

FRONT SUSPENSION

APPLICATION	N·m	Kg-m
Steering head to fork leg fixing	23/25	2.3/2.5
Steering base to fork leg fixing	23/25	2.3/2.5
Steering pin fixing ring	Torque controlled	
U-clamp/steering head fixing	23/25	2.3/2.5
Steering pin fixing	60/65	6.0/6.5
Front wheel spindle to fork leg	23/25	2.3/2.5
Headlight fixing	10/12	1.0/1.2
Instrument housing fixing to the steering head	9/10	0.9/1.0
Instrument fixing to housing	9/10	0.9/1.0
Front direction indicator fixing	9/10	0.9/1.0

REAR SUSPENSION

APPLICATION	N·m	Kg-m
Chain adjustment plate fixing	5/6	0.5/0.6
Fork pivot bush mounting to the frame	10/20	1.0/2.0
Fork pin fixing to frame	70/75	7.0/7.5
Fork pin fixing ring	45/50	4.5/5.0
Fork cover fixing	22/24	2.2/2.4
Rocking balancer/shackle stud shock absorber fixing	45/48	4.5/4.8
Shackle stud/frame fixing	45/48	4.5/4.8
Shock absorber fixing to frame	45/48	4.5/4.8
Chain tension adjuster fixing	9/10	0.9/1.0

Downloaded from www.Manualslib.com manuals search engine

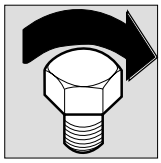

FAIRING AND MUDGUARDS

APPLICATION	N·m	Kg-m
Front mudguard fixing	5/7	0.5/0.7
Underneath seat side cover fixing	9/10	0.9/1.0
Front mudguard fixings central	9/10	0.9/1.0
Rear mudguard fixings	9/10	0.9/1.0
Atmospheric pressure sensor fixing	4/5	0.4/0.5
Fuse box fixing	4/5	0.4/0.5
Seat fixing	7/8	0.7/0.8
Number plate support fixing	7/8	0.7/0.8
Number plate support flange fixing	3/4	0.3/0.4
Reflector fixing	3/4	0.3/0.4
Rear light fixing	4/5	0.4/0.5
Front direction indicator fixing	9/10	0.9/1.0
Chain guard fixing	9/10	0.9/1.0

ELECTRICAL SYSTEM

APPLICATION	N·m	Kg-m
Engine earth cable fixing to frame	9/10	0.9/1.0
Engine bolts earth cable fixing	9/10	0.9/1.0
Negative pole battery fixing	9/10	0.9/1.0
Side stand switch fixing	9/10	0.9/1.0
Coil fixing	5/7	0.5/0.7

FUEL FEED SYSTEM

APPLICATION	N·m	Kg-m
Fuel tank fuel exit insert fixing	Torque controlled	
Tank cap fixing	5/7	0.5/0.7
Tank cap fixing and cap hole closure	5/7	0.5/0.7
Fuel pump fixing	5/7	0.5/0.7
Tank front fixing	9/10	0.9/1.0
Tank rear fixing	9/10	0.9/1.0
Fuel tank articulated plate fixing	9/10	0.9/1.0
Tickover adjuster fixing	9/10	0.9/1.0
Accelerator adjuster plate fixing	5/7	0.5/0.7
Filter compartment cover fixing	5/7	0.5/0.7
Air passage support fixing	9/10	0.9/1.0
Secondary air plate fixing to the engine	9/10	0.9/1.0
Blow-by compartment cover fixing	3/5	0.3/0.5
Blow-by compartment fixing	5/7	0.5/0.7
Tank cover fixing	5/7	0.5/0.7
Vacuum meter and solenoid fixing	5/7	0.5/0.7

Downloaded from www.Manualslib.com manuals search engine

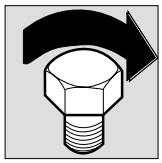

WHEELS AND BRAKES

APPLICATION	N·m	Kg-m
Front brake disc fixing	22/24	2.2/2.4
Front wheel spindle fixing	95/100	9.5/10
Rear brake disc fixing	33/35	3.3/3.5
Crown sprocket fixing	50/52	5.0/5.2
Rear wheel spindle fixing	95/100	9.5/10

EXHAUST SYSTEM

APPLICATION	N·m	Kg-m
Exhaust tube and silencer band fixings	23/25	2.3/2.5
Silencer fixing to the footrest	22/24	2.2/2.4
Silencer fixing to the frame	22/24	2.2/2.4
Exhaust tube cover fixing to the engine	9/10	0.9/1.0

SEAT

APPLICATION	N·m	Kg-m
Passenger strap plate fixing on the seat	9/10	0.9/1.0
Tail side cover fixing	5/7	0.5/0.7

COOLING SYSTEM

APPLICATION	N·m	Kg-m
Electric fan fixing	9/10	0.9/1.0
Radiator cap	28/30	2.8/3.0
Radiator fixing	9/10	0.9/1.0
Expansion tank fixing	9/10	0.9/1.0
Radiator tube band fixing	4/5	0.4/0.5
Electric fan switch	16/18	1.6/1.8

TORQUE PRESSURES (N.m) for each type of material

Screws (steel 8.8)	On plastic with metal washers	On brass, copper, aluminium and their alloys	Iron and steel
M4	2	2	3
M5	4	4	6
M6	6.5	6.5	10.5
M7		10.5	17
M8		16	26
M10			52
M12			100
M14			145

Downloaded from www.Manualslib.com manuals search engine

Section **M**

Downloaded from www.Manualslib.com manuals search engine

GENERAL DESCRIPTION A-1
Instrument panel A-4
Dimensions and weight A-3
Electrical system A-4
Engine unit A-3
Fuel/oil/engine coolant/fork oil capacity A-4
Wheels and brakes A-4
Front suspension A-4
Rear suspension A-4
Frame A-4
Transmission A-3

MAINTENANCE B-1
Spark plugs B-7
Transmission chain B-21
Cooling system B-19
Compression test B-27
Oil pressure check B-28
Technical data B-29
Air filter B-6
Brakes B-23
Clutch B-19
Throttle cable play B-18
Valve clearance B-10
Engine oil and oil filter B-16
Maintenance and tuning B-4
Tyres B-26
Oil pressure test procedure B-28
Compression test procedure B-27
Tickover B-17
Balancing of the carburettors B-18
Fuel tank removal B-4
Steering B-26
Fuel tubing B-16

AIR INTAKE AIR INJECTION SYSTEM C-1
Air intake system – technical characteristics C-20
FI system – technical characteristics C-9
Malfunction codes C-30
Injection time compensation (volume) C-10
Connectors/couplings C-3
Injection stop check C-10
Fuel injection check C-67
Fuel pump check C-49
Fuel pressure check C-48
Butterfly body C-52
FI system diagnostics C-28
ECM/various sensors C-4
ECM (FI unit test) C-14

Downloaded from www.Manualslib.com manuals search engine

Auto-diagnostic function C-24
Security function C-27
Fuses C-4
Throttle lever play C-72
Throttle position sensor adjustment (TPS) C-72
Fuel injector C-12
Carburettor system C-64
Dealer mode C-25
Electric fuel pump C-11
FI system – position of the parts C-21
Maintenance precautions C-3
Electrical system test procedures C-5
Auto-diagnostic procedure C-29
Cleaning the carburettor C-59
Throttle cable adjustment C-73
Choke adjustment C-68
Fuel pressure adjustment C-12
Butterfly body removal C-53
FI system electrical diagram C-23
FI system diagram C-22
Sensors C-16
Sensors C-74
Balancing of the carburettors C-69
Injection synchronisation C-15
Fuel pump control system C-13
Incoming fuel feed system C-11
Carburettor disassembly C-56
Carburettor disassembly C-60
Air filter disassembly C-51
Use of testers C-8

ENGINE D-1
Camshaft/cylinder head D-81
Cover/gearchange/crankshaft/connecting rod D-151
Cylinder/piston D-105
Engine components that can be removed without removing the engine D-3
Cylinder/piston test D-108
Camshaft/cylinder head check and maintenance D-90
Seat bearings check and maintenance D-163
Gearchange pre-selector assembly check and maintenance D-146
Clutch cover/water pump check and maintenance D-125
Clutch/disengage assembly check D-117
Timing system description D-83
Bowl filter/oil pressure regulator D-172
Oil filter D-177
Clutch D-114
Oil spray/piston oil cooling D-177
Primary drive gear/ N° 1 intermediate gear shaft timing pinion sprocket D-129

Downloaded from www.Manualslib.com manuals search engine

Camshaft installation D-102
Crankshaft/connecting rod/gearbox installation D-168
Clutch disengagement device installation D-122
Clutch installation D-119
Gearchange pre-selector group installation D-148
Engine/frame installation D-13
Piston/cylinder installation D-111
Water pump/clutch cover installation D-127
Oil pressure switch/oil cooler D-175
Water pump/clutch cover D-123
Oil pump D-170
Gearchange pre-selector D-143
Oil pressure D-177
Crankshaft thrust play adjustment D-167
Camshaft removal D-88
Cylinder/piston removal D-106
Clutch disengagement device removal D-116
Engine removal and installation D-4
Clutch removal D-115
Gearchange pre-selector group removal D-144
Starter motor removal D-142
Water pump/clutch cover removal D-124
Timing synchronisation diagram D-86
Engine lubrication system diagram D-178
Engine lubrication system D-169
Engine lubrication system D-179
Engine disassembly/assembly D-20
Timing distribution table D-87

SUSPENSION AND WHEELS E-1
Removal/check of the rear suspension
compensator assembly E-21
Front fork assembly E-12
Assembly of the rear suspension compensator assembly E-23
Support tube sliding assembly - reassembly E-9
Steering assembly E-16
Spring pre-load adjustment E-21
Front fork assembly overhaul E-7
Front wheel E-3
Rear wheel E-17
Support tube sliding assembly removal E-8
Handlebar removal E-13
Steering removal E-13
Front suspension E-6
Chain, crown wheel and pinion wheel overhaul E-18
Rear wheel E-17
Rear fork removal E-23
Rear suspension E-20
Frame E-25

Downloaded from www.Manualslib.com manuals search engine

BRAKES F-1
Brake pump check F-11
Brake pump check F-15
Brake pad wear check F-4
Brake discs F-4
Front brake F-3
Rear brake F-3
Brake pump assembly and installation F-11
Brake pump assembly and installation F-15
Front brake pincer removal and reassembly F-8
Rear brake pincer removal and reassembly F-9
Front brake pump removal and reassembly F-10
Rear brake pump removal and reassembly F-13
Brake fluid substitution F-6
Bleeding air from the braking circuit F-7

ELECTRICAL SYSTEM G-1
Maintenance precautions G-5
Initial charge G-38
Ignition/side stand security system movement check G-18
Starter relay check G-17
Switches G-37
Lights G-33
Maintenance G-39
Starter motor assembly G-16
Charging operations G-40
Starter motor removal and disassembly G-15
Starter system and side stand security system disassembly . G-12
Ignition system G-21
Charging system G-7
Instrumentation G-28

ENGINE COOLING H-1
Cooling system H-3
Engine coolant H-5
Radiator and coolant tubes H-6
Cooling fan H-9
Thermal fan switch H-10
Coolant temperature sensor H-12
Thermostat H-13

SPECIFIC TOOLS AND EQUIPMENT I-1

TORQUE PRESSURES L-1

Downloaded from www.Manualslib.com manuals search engine

Downloaded from www.Manualslib.com manuals search engine

Downloaded from www.Manualslib.com manuals search engine

Downloaded from www.Manualslib.com manuals search engine